Rochu®



Rochu CATALOG V2026.1

Grip Anything, Gently



If you need consulting services

(WhatsApp) (Instagram) (Facebook) (Youtube) (Tiktok) (Linkedin)

Email: sales@egroeco.com

Rechu®



Grip Anything, Gently

https://www.softroboticgripper.com

WhatsApp/Wechat:+86150 5171 0190

Catalog V2026.1

Zhangjiagang, Suzhou
Third floor, Building B,No. 36 Huada Road, Zhangjiagang Free Trade Zone, Suzhou City, Jiangsu Province

Kunshan, Suzhou
First floor, Building 3, Hongzhi Science and Technology Innovation Center, No. 470, North Changjiang Road, Kunshan City, Jiangsu Province

Guangming District, Shenzhen
Room 701, Building 1, Hengtaiyu Building, Guangming District, Shenzhen, Guangdong Province

For More Professional Solutions

Youtube channel

CATALOG V2026.1

Special

Customization

Online

Online service and free3D-CAD-models download

Fast

Fast counsel and delivery

Trusty

Reliable and good quality



Abundant product model

Abundant product models
We provide a large number of soft gripper models, with modular applications, which can quickly work out your soft gripping solution.

Many ways to help you choose

Many ways to help you choose
Don't know how to choose models? Don't worry.
We have professional consultants to assist you, and we can also provide gripping tests for your samples if provided to eliminate your worries.

Save design time

You can download 3D-CAD-models at www.rochu.com, a variety of models for your choice!

Fast customizable service

Rochu's professional technical team provides you with customizable services. The average develop-time is 5 working days.

Worry-free warranty service

Where from the date of purchase of goods within one year (consumable products within 6 months), due to quality problems of non-human damage, the company to apply, the company will replace or repair the corresponding products.

Honor and qualification

EU CE Safety Certification

FDA Certification

1935/2004/EC Regulation

RoHS Certification

ISO9001

ISO14001

ISO45001






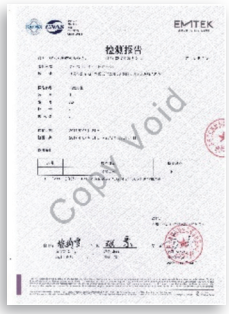
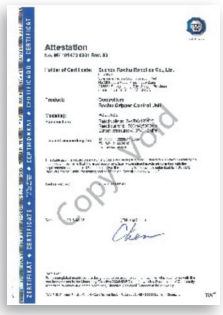

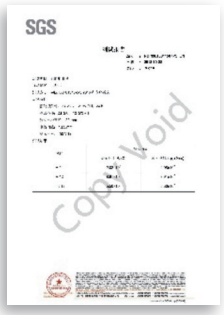











Partners


遨博智能
AUBO
CATL
宁德时代
DELTA 台达
UNIVERSAL ROBOTS+
Certified
Alibaba Group
阿里巴巴集团
FOXCONN
GSEO
玉晶光電集團
BYD
Electronics
Amphenol
德赛西威
DESAY SV AUTOMOTIVE
ATL
宁德新能源
Amperex Technology Limited
Smartee™
正雅
越疆科技
瑞声科技
AAC TECHNOLOGIES
ShyaHsin
PACKAGING
领益科技
ADTECH
从为兴
ROBOT PHOENIX
翼菲自动化
LENS
蓝思科技
ZET
atomrobot
阿童木机器人
ihdm 怡合达
FA工厂自动化 一站式采购平台
LUXSHARE ICT
立讯精密
EPSON
faurecia
BOSCH
平方和
SIGMA SQUARES TECH
YASKAWA
MOTOMAN ROBOTICS
HUAWEI
JAKA
华域汽车
盐津铺子
元祖食品
GANSO
港荣食品
安井

Applications

Soft grippers, inspired by octopus tentacles, softly wrap around objects for flexible, scratch-free grasping without damage. Widely used in industries like automotive parts, 3C electronics, food, medical care, injection molding, apparel, and daily chemicals.Applied in automated scenarios (handling, sorting, packaging, assembly), they also eliminate secondary damage risks in processes like inspection, dispensing, injection molding, CNC machining, grinding, and coating. With high safety, strong versatility, and easy installation, they save engineers non-standard design time and are the top end-effector choice in automation.

3C Electronics

Suitable for gripping and unloading of injection moulded products such as medical, daily chemicals, stationery,consumer electronics and the stuff.



Auto parts

It is used for sorting, handling, loading, and unloading automobile headlights, metal special-shaped parts, and exterior parts. Especially suitable for small batch and multi-batch soft production requirements.



Injection molded product

Suitable for medical, daily chemicals, stationery, consumer electronics and other injection molding products grab material, high temperature resistance of 200℃or more, can be matrix arrangement.

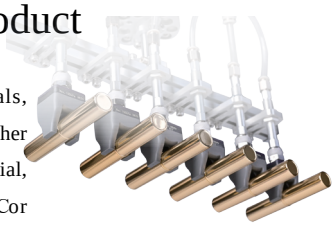

Food

Food safe materials. It has obtained FDA Certification and can directly contact the food. It is especially suitable for sorting and packaging fruits and vegetables, irregular vacuum packaged food, dairy products, dough cakes, and so on.



Fabric

It is suitable for layered grasping or multi-layer simultaneous grasping of knitted and woven fabrics. During layered grabbing, it can only grab the top layer or handle a whole stack of pieces.

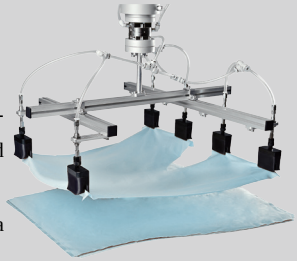

Medical Supplies

It is used for grasping medical consumables such as infusion tubes, test tubes, ampoules, as well as bottled and bagged reagents, and for the process of production and disinfection of medical instruments.

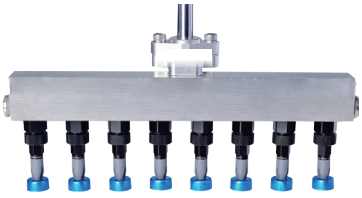

Product Advantages

Soft



Biomimetic structural design enables enveloping gripping, suiting factories' small-batch, multi-variety flexible production lines and saving line switching time.
Rochu Gripper has a max opening/closing speed of 300 times/min, max repeat positioning accuracy of 0.05mm, max load of 9kg, and service life of millions of cycles. It also has flame retardancy, acid/alkali resistance, oil resistance, anti-static properties, scratch-free operation, protection against scratching/crashing/squeezing, and max temperature resistance of 220℃, adapting to most industrial scenarios.



Safe



Rochu's soft gripper is made of pure soft material and possesses adjustable clamping strength, making it safe to pick and place soft and flimsy objects.
To deal with vulnerable and fragile products, Rochu's soft gripper can not only avoid damage but also avoid scratches on the surface while the safety of the operator is also guaranteed.
The material has obtained FDA Certification and can be in direct contact with food.

Easy



The standardized finger module makes the construction of soft gripper as simple as building blocks and saves design time.
Rochu Control Unit is equipped with a standard communication interface, which is seamlessly matched with all kinds of mechanical arms and PLC, as easy as using a USB flash drive.
The controller has a wireless remote control function and built-in air source (ACU configuration), which is convenient for installation and adjustment. It can also be used in the mobile working environment without an air source.

Thin,brittle and fragile



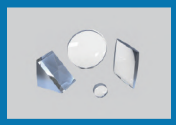

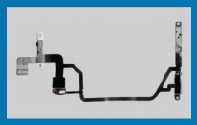

Soft and breathable







Ring



special-shaped





Different sizes





Rochu Gripper Introduction

Rochu Gripper, a soft fixture independently developed by Rochu Robot, uses bionic principles to mimic octopus tentacles and envelop objects for grasping.

Traditional fixtures often fail to grasp well due to limitations like object shape, material, and grasping needs. By contrast, the flexible-material Rochu Gripper avoids damaging objects. Its centimeter-level adaptability also gives it high versatility (a "one-gripper-for-all" solution), fitting objects of different shapes and eliminating frequent fixture replacement.

This gripper fills the gap in robotic end grippers and greatly expands industrial robots' application scenarios.

Scan to watch videos

Working principle

The soft beak uses pneumatic drive, opening or closing via positive or negative pressure switching for flexible grabbing or outward supporting. Adjusting air pressure controls its clamping force or opening-closing angle, enabling flexible grabbing of various objects without damage.

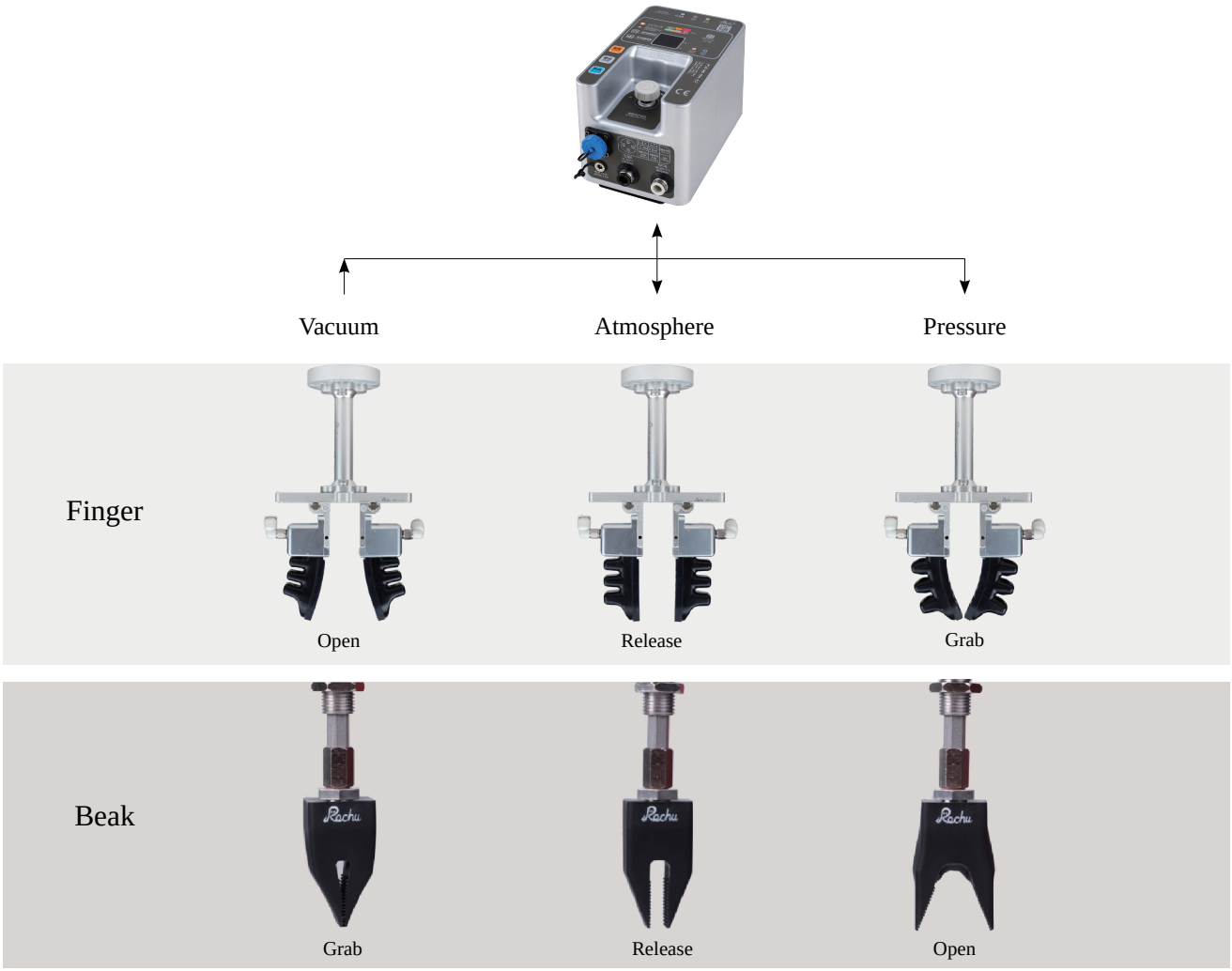

The air pressure must be strictly controlled within the Safe Pressure range. Overload use may cause irreversible damage to the product. It is recommended to use the original Rochu control unit to ensure the service life and stability of the product. Please refer to the product page or package identification for the air pressure of the product.

Material safety performance

Material		[S]/[P]/[H]	[LP]/[LH]	[MHB]	[NH]/[NP]
Safety	1186/2022/EN Total Migration Test of Food Contact Materials in the European UnionEN 1186/2022	Fit	Fit	Fail	Fail
	1935/2004/EC Testing of Food Contact Materials in EuropeEC 1935/2004	Fit	Fit	Fail	Fail
	FDA Certification of Food Contact Materials by the US FDA	Fit	Fit	Fail	Fail
	RoHS NPS Directive on the Prohibition of Toxic and Hazardous Substances in the European Union(RoHS)	Fit	Fit	Fit	Fit
	REACH NPS The EU's <Registration, Evaluation, Authorisation and Restriction of Chemicals">(REACH)	Fit	Fit	Fit	Fit
	MTT Cytotoxicity Test	Fit	Fit	Fail	Fail
Temperature-resistant	Contacted object surface temperature	-40~220°C	-40~220°C	-50~150°C	-40~100°C
	Operating ambient temperature	-20~110°C	-20~110°C	-20~110°C	-20~110°C
Oil resistance	Vegetable oil	Moderate	Moderate	Moderate	Good
	Heavy oil (lubricating oil, gear oil, hydraulic oil, etc.)	Bad	Bad	Bad	Excellent
	Light oil (volatile oils such as gasoline, diesel oil, kerosene, emulsified oil, drawing oil, etc.)	Bad	Bad	Bad	Good
Solvent resistance	Alcohols (methanol, ethanol)	Excellent	Excellent	Moderate	Excellent
	Benzene, Toluene	Bad	Bad	Bad	Moderate
	Acetone, Ethyl acetate	Bad	Bad	Bad	Moderate
Acid and alkali resistance	Weak acid with 6 to 7 pH value (such as low-concentration phosphoric acid, oxalic acid, etc.)	Good	Good	Good	Moderate
	Weak base with 7 to 8 pH value (such as low-concentration ammonia water, etc.)	Good	Good	Excellent	Good
	Strong acids (such as hydrochloric acid, sulfuric acid, nitric acid, etc.)	Moderate	Moderate	Moderate	Bad
	Strong bases (such as sodium hydroxide, electrolyte, etc.)	Bad	Bad	Excellent	Moderate
	Oxidizing strong acids (concentrated nitric acid, fuming sulfuric acid), hydrofluoric acid, etc.	Bad	Bad	Bad	Bad
Water resistance	Water vapor	Excellent	Excellent	Excellent	Moderate
	Water-based cutting fluid	Good	Good	Good	Moderate
Weather resistance	General aging resistance	Excellent	Excellent	Excellent	Moderate
	Ultraviolet rays resistance	Excellent	Excellent	Excellent	Bad
	Ozone resistance	Excellent	Excellent	Excellent	Bad
Conductivity	Execution standard	Surface resistance			
	GB/T 11210-2014	$>10^{12}\Omega$	10^{6}~$10^{9}\Omega$	$>10^{12}\Omega$	$>10^{12}\Omega$

Excellent：Can be in stable contact for a long time. **Good**：Stable for short-term contact and needs to be replaced regularly.

Moderate：Can be in intermittent contact and needs to be replaced regularly. **Bad**：Not recommended for use.

General Index

WC Workpiece and Condition








KIT Kit Combination



DK-1.37
Soft Beak Kit



DK-1.38
Soft Beak Kit



DK-1.31
Soft Beak Kit



DK-2.0
Omnipotence Kit

DA / B Beak Module / Soft Beak



Unicuspid Soft Beak



Biscuspid Soft Beak



Tricuspid Soft Beak



Quadricuspid Soft Beak



Soft Anemone



Soft Boots

N Nail



N-Y Series Fingertip
(Soft Wing)



N-N Series Fingertip
(Soft Tweezer Tips)

G Gripper Protective Cover




VSM Vacuum Sucker Module





P.371-413 **FMA / F** Finger Module / Finger



Finger Module A



Finger Module B



Finger Module C

P.414-417 **EOS** Electronices Optices and Sensor



SE-FP Series
Flexible bone probe



SE-OF Series
Optical fiber signal amplifier



EC-76
Thin-film Solid-state Relay

P.418-441 **CU** Control Unit



HCU-A35



EK-HCU
Drive Pen
Expansion Kit

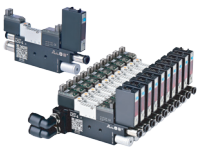

LCU-S
Light-duty Drive Module
(Standard Type)

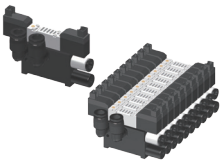

LCU-E
Light-duty Drive Module
(Cost-effectiveness)



LCU-V
Light-duty Drive Module
(Vacuum Type)



LCU-H
Light-duty Drive Module
(High-speed Type)



iPCU2
Passive Actuator



iPCU2-E
Passive Actuator
Cost-effectiveness)



ACU2-B
Active Actuator



ACU2-H
Active Actuator



PCU2
Passive Actuator

P.443-464 **AF** Assembling Fittings



QCM
Quick changer
Module



FCM
Flange Connection
Module



RF
Robot flange



SMP
Robot flange



CP
Connector Part



P
Profile



CM
Connection
Module



PN
Pneumatic Fittings

WC

Workpiece and Condition









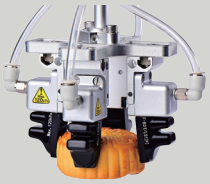



Internal handling of phone lens rings

Scan to watch videos

Product name	Product code	Quantity
Beak Module	DAC-3B13[H]/S	6



- 1.Multiple internal supports are arranged in rows or matrices to meet production efficiency;
- 2.Standardized products, and the grippers are easy to replace and maintain;
- 3.The clamping is stable, the dropout rate is 0, and there is no secondary damage to the product.





- 1.The inner and outer rings of mobile phone cameras are easily scratched. Before assembling the finished product, it is necessary to ensure that there is no dirt;
- 2.It involves PVD coating and loading and unloading processes for inspection. The trays are densely filled with incoming materials and multiple synchronous handling is required;
- 3.Vacuum profiling suction tools are unstable and prone to dropping parts, and the cost is high.

WC-1490

FPC detection

(**Flexible printed circuit board**)

Scan to watch videos

Product name	Product code	Quantity
Beak Module	DAC-20301[LH]/S	1

*For the anti-static version of LH, please consult the customer manager.

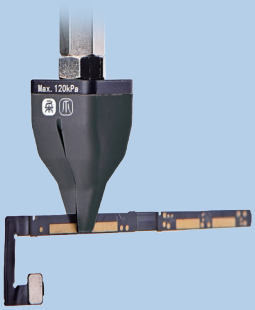

- 1.The anti-static soft claw protects the surface of the product and at the same time does not generate electrostatic accumulation and protects the components;
- 2.FPC detection is usually incoming from trays. The slender claw tip of the soft claw can reach into narrow gaps;
- 3.Simple structure, convenient installation and strong versatility.





- 1.The miniaturization of electronic products promotes the size of flexible printed circuit boards to be even smaller and the structure to be more irregular;
- 2.Manual inspection lines urgently need to be transformed into automatic inspection machines;
- 3.Suction cups and steel claws cannot suck or are easy to scratch products.

WC-1488

Handling of glass panels.

Scan to watch videos

Product name	Product code	Quantity
Finger Module	FMA-C4V2/LS8[H]	4
Connect Module	SMP-01	4
Control Unit	iPCU2-HMN	1

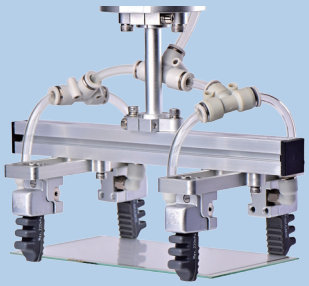

- 1.The soft finger series features modular design, simple structure and light weight;
- 2.The clamping force is precisely controllable. With the LS8 flexible finger texture, the glass surface will not be touched during clamping, which is stable and reliable;
- 3.Combined with the sliding mounting plate, it can be compatible with various specifications of panels.





- 1.After the glass panel is laminated, the surface cannot be touched;
- 2.The structure of the non-standard profiling gripper of the cylinder is complex and the cost is high;
- 3.There are many sizes, and the end fixture is required to be universal.

WC-1492

Mobile Phone Handling

Scan to watch videos

Product name	Product code	Quantity
Beak Module	DAC-1GN4030[H]/M Customized version	4

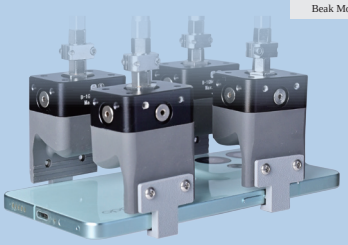

- 1.Internal-skeleton grippers offer high clamping force, 0.1N force-control accuracy, ±0.05mm repeat positioning. They meet phone - gripping needs and prevent three damages;
- 2.Soft-material, contoured gripper contacts phone from bottom, ensuring stable handling;
- 3.Standard-product replacement is convenient, doesn't impact efficiency, and requires no secondary calibration.





- 1.Mobile phone production has multiple processes. Many need inspections for semi-product yield, with no surface contact allowed;
- 2.Cylinder fixtures can't adjust clamping force precisely, have complex designs. Rubber-coating still causes three phone damages. Frequent replacements hamper production line efficiency;
- 3.Incoming material fixtures have narrow space, restricting gripper claw thickness to 4-8mm.

WC-1437

*For the control unit and other accessories, please consult the account manager.

Pick and Place of VCM Motor Carriers

Scan to watch videos

Product name	Product code	Quantity
Beak Module	DAC-3B12[H]/S	6



- 1.Soft claws, available in dust-proof and anti-static versions, effectively solve material-carrying issues and achieve ±0.05mm accuracy;
- 2.Soft claws, with strong compatibility, use flexible materials that won't damage workpieces;
- 3.Small-sized and lightweight soft claws can meet matrix - arrangement grasping needs.



- 1.Light carriers are prone to material-carry-over during grasping, with high grasping-accuracy demands;
- 2.Workpiece inner-hole sizes vary; ordinary fixtures may scratch them;
- 3.Injection-molding blanking and tray-arranging need multiple claws to grasp synchronously, with high space requirements.

WC-1496

Handling of Blister Tray

Scan to watch videos

Product name	Product code	Quantity
Finger Module	FMA-A4V5/LS1[P]	6



- 1.The soft finger module has strong adaptability and can fit the tray closely, ensuring the stability of handling;
- 2.The modular design of the soft fingers enables rapid assembly, which is suitable for multiple types of trays. Moreover, it can adapt at the centimeter level without the need for adjustment;
- 3.The soft fingers can be customized into anti-static and dust-free versions, ensuring the safety of electronic products during the transfer process and being suitable for dust-free environments.

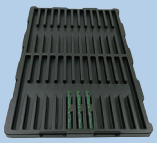



- 1.In the electronics industry, most parts are produced and transferred using blister trays (material trays) during the production process. The automatic handling, loading, and unloading of trays are crucial aspects of automation;
- 2.The handling of trays with materials requires extremely high stability to ensure the safety of the entire tray of materials. For some trays, due to the lack of a large enough suction surface, the suction cups cannot stably suck them, resulting in parts falling off;
- 3.As there is a wide variety of trays, there is a relatively high requirement for the compatibility of the fixtures.

WC-2072

RAM module gripping

Scan to watch videos

Product name	Product code	Quantity
Beak Module	DAC-2TN1006[LH]/M	1

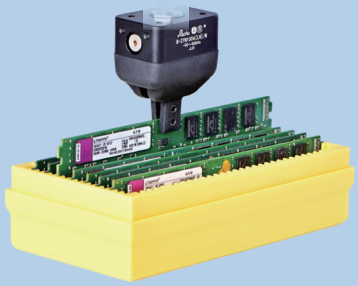

- 1.SoftTouch customized service enables damage-free gripping of micro holes with a width of 1.2 mm, perfectly meeting the pick-and-place requirements for long-strip keys of 1.2 mm width;
- 2.SoftTouch LH material is made of anti-static organic silicone, with a stable surface resistance of $10^6\Omega$–$10^9\Omega$, effectively eliminating the risk of static charge buildup on precision keys;
- 3.SoftTouch flexible AS material reduces the adhesion between the gripper and the workpiece contact surface. This technology effectively eliminates the risk of sticking during the pick-and-place of thin and light workpieces.

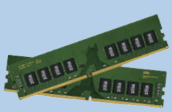



- 1.The finger tip width of pneumatic grippers is ≥ 2.5 mm, making it impossible to accurately grip ultra-thin components (usually with thickness < 1 mm);
- 2.The gripping force of pneumatic grippers is non-adjustable, which easily causes scratches, deformation or electrostatic damage to thin and light components;
- 3.Fixed fixtures must be individually designed for different parts. Frequent fixture replacement is required during iteration of 3C components, resulting in long design cycles and incompatibility with multiple sizes.

WC-3108

Mobile Phone Buttons Clamping

Scan to watch videos

Product name	Product code	Quantity
Beak Module	DAC-2NH1107[PAS]/S(Custom Version)	1



- 1.Rochu bionic gripper cuts the key surface scratch rate from 8% to 0, boosting yield;
- 2.Using Rochu soft grippers, each as light as 4.7g, can effectively cut the module load;
- 3.Keys of different thicknesses are compatible without replacing the grippers.





- 1.High-gloss key surfaces need zero scratches during gripping. Yet, pneumatic cylinder grippers have imprecise contact stress control, easily raising defect rates;
- 2.Pneumatic cylinder grippers hardly adapt to size differences of different key models, requiring
- frequent fixture changes and increasing downtime;
- 3.Electronic products update fast, and custom non-standard pneumatic cylinder grippers boost process verification costs.

WC-2324

*For the control unit and other accessories, please consult the account manager.

Phone Glass Back Panel Handling

Scan to watch videos



Product name	Product code	Quantity
Beak Module	DAC-1GN3527[NH]/SN	2

- 1.Rochu soft gripper's sealed design blocks grinding fluid and dust, preventing air circuit blockage or mechanical corrosion and cutting equipment failure rates;
- 2.Rochu gripper's NH material resists grinding fluid corrosion, and its soft texture avoids glass breakage/scratches from rigid contact;
- 3.The flexible gripper has ±5mm positional tolerance—even with slight incoming material deviation on the roller conveyor, it adapts to ensure accurate tray stacking, reducing misalignment and rework.





- 1.Cylinders and suction cups corrode easily from grinding fluid; dust buildup clogs air circuits, causing frequent cleaning shutdowns and hurting production efficiency;
- 2.1.5mm ultra-thin glass breaks easily during rigid clamping/vacuum adsorption; surface residual fluid may also make suction cups slip, leading to handling failure;
- 3.Glass back panels may have ±2mm positioning deviation on roller conveyors—traditional suction cups/grippers can't adapt, causing misaligned stacking and higher rework rates.

WC-2036

Case Handling and Inspection

Scan to watch videos



Product name	Product code	Quantity
Beak Module	DAC-1G3024[LHAS]/SN(Custom Version)	2
Flexible probe	SE-FP31	1
Optical fiber signal amplifier	SE-OF45N	1

- 1.The unicuspid soft beak is freely adjustable, compatible with multi-spec watch cases (cuts spare parts inventory by 30%), and its nano non-marking material eliminates grip marks;
- 2.Pneumatically driven, the flexible gripper adapts to multi-spec watch cases, slashing model changeover and debugging time;
- 3.Rochu bionic silicone avoids surface damage to vulnerable parts, while its anti-static non-marking material prevents dust adsorption.





- 1.Most watch cases are mirror-polished stainless steel/titanium alloy, and pneumatic cylinder grippers easily scratch them;
- 2.Watch cases build static during high-speed handling, attracting dust and causing a 12% contamination rate;
- 3.Pneumatic cylinder grippers may shift 0.2-0.5mm when flipping, harming secondary clamping precision and needing manual calibration. Also, watch cases have 3-8mm curved surface radii, which the grippers' fingertips can't adapt to—causing excessive local stress and deformation risk.

WC-1514

Inner Bracing of Phone Volume Key

Scan to watch videos



Product name	Product code	Quantity
Beak Module	DAC-21D204[LHAS]/S	8

- 1.Rochu customization enables rapid damage-free gripping of 1.2mm-wide micro-holes, meeting 1.2mm-wide long strip button picking/placing needs;
- 2.Rochu LH material is anti-static silicone, with stable surface resistance (10^6-$10^9\Omega$), effectively eliminating static buildup risk on precision buttons;
- 3.Rochu AS material reduces gripper-workpiece adhesion, eliminating stickiness risk when handling thin, light workpieces.





- 1.Pneumatic cylinder grippers have fingertip width ≥2.5mm, unable to accurately grip ultra-thin components (thickness often <1mm);
- 2.Pneumatic cylinder grippers' non-adjustable clamping force easily scratches/deforms thin, light components and may cause electrostatic damage;
- 3.Different parts need separate fixed jigs; 3C component iteration requires frequent fixture replacement. These jigs have long design cycles and no multi-size compatibility.

WC-1508

SIM card tray inner support

Scan to watch videos



Product name	Product code	Quantity
Beak Module	DAC-2AN0603[LH]/S	1

- 1.Soft grippers are made of flexible materials and can directly contact the thin-walled structure of SIM trays without causing any damage;
- 2.The adaptive allowance of soft grippers enables adaptation to the internal expansion of SIM trays for multiple models in the same series; no fixture replacement is needed, and the production line model changeover and commissioning time is reduced to within 1 minute;
- 3.Each soft gripper weighs only 7.3g, and with the cooperation of SCARA robots, it can achieve high-speed gripping with a repetitive positioning accuracy of ±0.05mm.





- 1.The phone SIM tray is generally manufactured by stamping and injection molding processes. It's overall light, thin and compact, freeing up space for the battery, main board and other components;
- 2.The dimensions of the SIM tray vary slightly across different phone models, so the profiling of the end part of the pneumatic cylinder fixture needs to be redesigned;
- 3.The SIM tray has no large flat surface for suction cups to grip, and the profiled design of the pneumatic cylinder gripper is complex with a relatively heavy weight, leading to a complicated overall structure.

WC-1679

*For the control unit and other accessories, please consult the account manager.

Mouse Gripping



Scan to watch videos

Product name	Product code	Quantity
Beak Module	DAC-1UN4030[H]/M	2

- 1.For irregularly shaped mice, standard soft grippers can adapt to most housing sizes, greatly saving the time cost of model selection, and enveloping gripping eliminates part dropage;
- 2.Soft grippers feature controllable clamping force, which matches the thin-walled housings and batteries, avoiding damage to internal components;
- 3.Soft grippers are compact in size and light in weight, and can be closely arranged in multiple units, thus improving production efficiency.





- 1.Mouse shells adopt a thin-walled structure, with their surfaces mostly featuring a matte/brushed finish and subject to extremely stringent appearance requirements;
- 2.The clamping force of pneumatic cylinders is uncontrollable, which makes them highly likely to scratch and damage mouse shells and result in scrapping. Furthermore, it is difficult to achieve enveloping gripping for special-shaped mouse shells, leading to a high part drop rate;
- 3.When traditional grippers face a dimensional tolerance of ±0.2mm, frequent parameter adjustment is required, which causes the production line model changeover time to increase by more than 15%.

WC-3645

Inductor Coil Inner Support



Scan to watch videos

Product name	Product code	Quantity
Beak Module	DAC-3G20[H]/S+N60	1

- 1.Soft grippers enable precise force control and are matched with custom-shaped ultra-fine tips, causing no damage to coils even under the maximum clamping force;
- 2.The self-adaptive capability allows soft grippers to stably expand and grip coils, reducing the drop rate to 0.01%; the sorting speed is also greatly improved, meeting the production capacity requirements;
- 3.Soft grippers can adapt to coils of multiple diameters and specifications, with no fixture replacement required.



- 1.Coils are miniature electronic components with a helical flexible structure on the main body and poor supportability;
- 2.Rigid grippers tend to scrunch and scratch coils, which leads to scrapping and raises the cost of subsequent testing;
- 3.When rigid grippers handle coils of different sizes and turn numbers, special fixtures need to be frequently replaced, making it impossible to realize flexible line change.

WC-3785

Prism Gripping



Scan to watch videos

Product name	Product code	Quantity
Beak Module	DAC-2G1622[H]/SN	1

- 1.Soft grippers avoid the edges and apex angles in the contact area, and the soft material causes no hard impact, leading to a significant reduction in the chipping loss rate of the prism edges;
- 2.Soft grippers can be upgraded to antistatic and trace-free materials, preventing dust contamination of the optical working surfaces caused by electrostatic adsorption, thus eliminating the auxiliary process of vacuum dust removal;
- 3.Flexible buffered gripping causes no stress concentration, completely preventing internal microcracks and reducing the rework rate in the subsequent optical assembly process from 20% to 0.

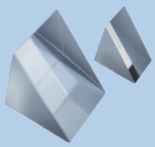

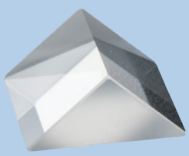

- 1.Prisms are mostly made of high-purity optical glass and feature high-standard light transmittance and spectral uniformity;
- 2.Rigid grippers tend to scratch the coating layers, which results in a 10%-15% reduction in light transmittance, and the defective rate in optical inspection reaches 12%;
- 3.Ordinary grippers are prone to contact the edges/apex angles of prisms, leading to an 8% loss rate caused by chipping and corner breakage; in addition, chipping debris is likely to contaminate the optical working surfaces of other prisms.

WC-3668

Headphone Case Gripping



Scan to watch videos

Product name	Product code	Quantity
Beak Module	DAC-2GN2232[H]/SN	1
Soft Wing	N-Y4130AB[R]	2

- 1.Soft grippers are made of soft silicone material, featuring uniform contact pressure and no hard friction, achieving a 100% yield rate;
- 2.The combination of soft grippers and soft wings can self-adapt to the wall thickness of the shells, avoiding deformation of thin walls and being able to reach into the narrow space of material trays;
- 3.Soft grippers can adapt to the dimensional tolerances of different headphones, with no need for fixture replacement or parameter adjustment, thus eliminating the production line model changeover time.

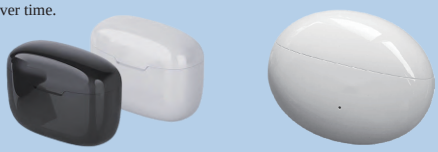

- 1.Headphone shells are mostly made of PC/ABS high-gloss plastic material with a surface hardness of only around 2H; their coating layers are extremely fragile, and slight friction can immediately cause scratching and paint peeling;
- 2.The clamping force of pneumatic cylinders is uncontrollable, which easily crushes the thin-walled shells, resulting in an excessive mold clamping gap and failure to assemble with the headphone main body;
- 3.When automated production lines handle headphone shells of different sizes, frequent fixture replacement or parameter adjustment is required, which leads to an increase in the production line model changeover time.

WC-3453

*For the control unit and other accessories, please consult the account manager.

Transformer Component Gripping

Scan to watch videos



Product name	Product code	Quantity
Beak Module	DAC-2G1622[H]/SN	1

- 1.Soft grippers have no shape restrictions for gripping and feature a high friction coefficient, enabling stable gripping with low risk of falling off;
- 2.Soft grippers are compact in structure and simple to control, and can be rapidly integrated into existing robotic arms or automated equipment;
- 3.Soft grippers can self-adapt to workpieces, increasing the contact area, dispersing pressure and avoiding stress concentration, thus eradicating scratching and cracking from the source.

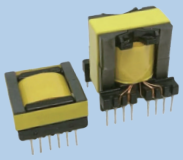

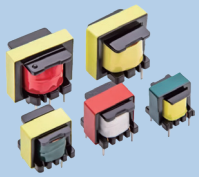

- 1.A transformer consists of multiple components including coils, magnetic cores, bobbins and pins. It features an irregular shape with uneven surfaces and gaps, which easily causes air leakage in suction cups and thus results in falling off;
- 2.Transformers are precision electronic components, traditional rigid fixtures are highly likely to scratch the insulating varnish, which leads to short circuits or performance degradation;
- 3.Flexible testing equipment needs to adapt to transformers of different sizes, which brings about high universality requirements for the equipment.

WC-3422

PCB Handling

Scan to watch videos



Product name	Product code	Quantity
Beak Module	DAC-1GN4030[LH]/M	2

- 1.Flexible grippers only contact the edge non-component areas of PCBA, and soft buffering prevents substrate cracking and component detachment, reducing the cascading scrap rate from semi-assembly to subsequent processes from 12% to 0.
- 2.The antistatic flexible material prevents chip breakdown caused by static electricity and dust adsorption, cutting down the material and labor costs incurred by mass rework.

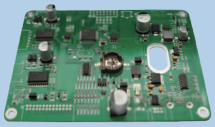

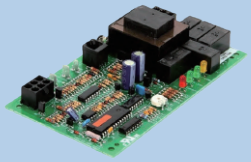

- 1.A PCBA integrates a variety of components, with exposed copper pads and conductive traces on its surface, making it rather sensitive and fragile.
- 2.IC chips are electrostatic discharge (ESD) sensitive devices; ESD and dust adhesion will cause chip breakdown and copper pad oxidation, which impairs the subsequent electrical performance.
- 3.Uneven gripping force of ordinary grippers is likely to cause cracking of the substrate edges and open circuits of vias. Such latent damages can only be detected through subsequent electrical testing, resulting in a 5-fold increase in rework costs.

WC-3768

Compatible Gripping of Speakers

Scan to watch videos

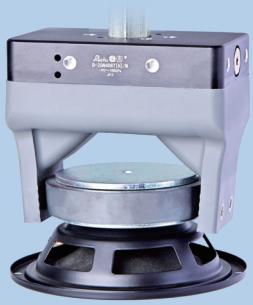

Product name	Product code	Quantity
Beak Module	DAC-2GN4087[H]/M	1

- 1.When the material of soft grippers directly contacts the speaker diaphragms and soft rubber surrounds, it will not cause scratching, damage or dents;
- 2.Gripper fingertips can be custom-shaped to match the special-shaped speaker housings and adapt to speakers of different sizes simultaneously, eliminating the need for gripper replacement and featuring high universality;
- 3.The clamping force is controlled with a precise 0.1N, which can not only grip the housings stably but also avoid extruding the internal components and causing deformation, thus ensuring the audio quality of speakers.





- 1.Speaker diaphragms are highly prone to deformation and tearing, while voice coils are liable to break under tension and short-circuit under compression;
- 2.In automated production lines, traditional grippers have a poor fit with the special-shaped structure of speakers and are prone to slipping off during vertical gripping, which results in production line downtime;
- 3.The soft rubber surrounds of speakers are soft in texture and prone to dents and creases, which compromises the airtightness of the speakers.

WC-3375

Graphics Card PCB Handling

Scan to watch videos



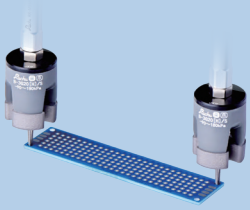

Product name	Product code	Quantity
Beak Module	DAC-3G20[H]/S+N77	2

- 1.Internal expansion type soft grippers with customized fingertips accurately adapt to the size of GPU structural holes; with 0.1N precise force control, no scratch to the hole walls or damage to the substrate will be caused even when expanding tightly;
- 2.The modular design of soft grippers combined with quick change enables efficient adaptation to GPUs of different models;
- 3.Soft grippers feature a simple overall structure and are easy to deploy.

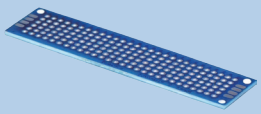

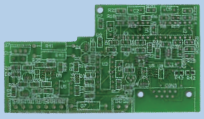

- 1.The surface-mounted components on GPU PCBs are fragile, with a compact layout and ESD-sensitive features; no foreign contact with their surfaces is allowed whatsoever;
- 2.A GPU PCB has only 2 to 3 structural holes of 2.4mm in diameter available for internal expansion handling. Suction cups cannot achieve effective adsorption, and pneumatic cylinders are unable to perform precise force control while featuring a complicated structure;
- 3.There is a wide variety of graphics card models, so automated equipment requires multi-model compatibility, which leads to high design difficulty.

WC-3417

*For the control unit and other accessories, please consult the account manager.

Smart Ring Gripping

Scan to watch videos



Product name	Product code	Quantity
Beak Module	DAC-4A18[H]/S	1

- 1.Soft grippers feature 0.1N precise force control, which can not only realize stable handling but also avoid extruding the built-in electronic modules of smart rings and prevent component displacement or damage;
- 2.Antistatic material for soft grippers can be customized, so no static electricity is generated during handling, precluding ESD breakdown of built-in electronic components such as sensors and micro batteries in smart rings;
- 3.Trace-free flexible material is an optional choice for soft grippers, which will not leave fingerprints or grease when contacting smart rings, avoiding contamination of the workpiece surface before electroplating and thus ensuring coating adhesion.





- 1.With the miniaturization and high integration of embedded components in smart rings, their resistance to mechanical stress is extremely poor;
- 2.Smart rings are equipped with miniature electronic components, and electrostatic discharge (ESD) can easily damage the sensors and batteries during handling, resulting in the scrapping of the rings;
- 3.Smart rings lack sufficient flat surfaces for suction cups to achieve effective adsorption, and traditional pneumatic cylinders are incapable of precise force control and feature a complicated structure.

WC-3418

Internal gripping of ceramic rings

Scan to watch videos



Product name	Product code	Quantity
Beak Module	DAC-20603[H]/S	4

- 1.The soft claw has a force control accuracy of 0.1N to ensure a 100% product yield;
- 2.It is small in size and can be transported simultaneously by multiple units, improving efficiency;
- 3.It is a standardized module and is convenient for replacement and maintenance.

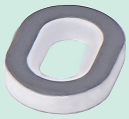



- 1.Alumina ceramic rings are used in power battery connections. After die-casting, they need to be palletized;
- 2.The powder before sintering is fragile and easily damaged, and manual tray placement has been relied on for a long time;
- 3.There are many inner hole sizes, and a certain degree of versatility is required.

WC-1041

Steel-shell batteries grasping

Scan to watch videos



Product name	Product code	Quantity
Beak Module	DAC-3A18[MHB]/S	16

- 1.The soft gripper can be customized with new materials such as ethylene propylene diene monomer (EPDM) rubber and fluororubber, which have corrosion resistance, ensuring stable production and avoiding parts from falling off;
- 2.The soft gripper are light in self-weight, effectively saving the load of the subsequent machine, and can be compatible with batteries of multiple specifications without the need to change the model;
- 3.The entire soft gripper does not contain copper, zinc or nickel substances. It has a simple structure, and is convenient for maintenance and replacement.





- 1.In the production environment of steel-shell batteries for consumer electronics, the corrosive electrolyte can make air cylinder malfunction, damaging products or causing parts to drop;
- 2.During the battery production process, substances such as copper, zinc, and nickel should not be in contact with the batteries. Otherwise, it will pose potential safety hazards;
- 3.To ensure efficiency, multiple synchronous gripping is required, and the size of the fixture should be as small as possible to facilitate the arrangement.

WC-1971

Stratification of lead frame.

Scan to watch videos

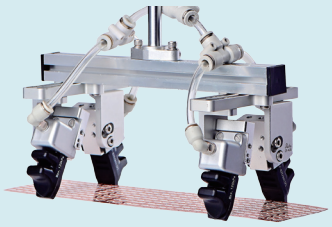

Product name	Product code	Quantity
Finger Module	FMA-B3V3/AC1[P]	4
Connector Part	CP-ACB	4
Slide Mounting Plate	SMP-2L	2

- 1.The modular flexible finger solution has a simple structure, can quickly build a stratification solution, and has strong versatility;
- 2.The specially made AC1 flexible finger with embedded rigid skeleton has higher wear resistance, and the service life in this scenario can be increased by 2 to 3 times;
- 3.With the flexible finger rotating connection module, the success rate of single-layer splitting can reach 99.99%.

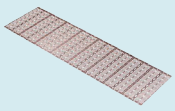

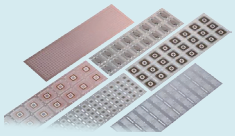

- 1.The lead frame is the chip carrier of an integrated circuit. It is stamped into an extremely thin and hollow structure. For multi-layer incoming materials, single-layer splitting needs to be done;
- 2.Suction cups can cause missed suction and dropped parts or carry materials. Rigid grippers can cause large deformation;
- 3.The extremely thin thickness of 0.2mm is a great challenge to the service life of the flexible gripper.

WC-1435

*For the control unit and other accessories, please consult the account manager.

Gripping of Chips

Scan to watch videos



Product name	Product code	Quantity
Beak Module	DAC-2G2027[LH]/SN Customized version	1
Control Unit	LCU-S_A	1

- 1.Soft claws can grasp multiple chip products without model change, avoiding chip-surface contact;
- 2.Without affecting cavity structure, soft grippers' fingertips can be cut per tray clearance width for quick solution design response;
- 3.Soft grippers with added anti-static materials prevent static build-up during production, safeguarding chips.



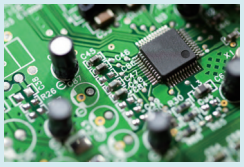

- 1.Initially, chip-inspection loading/unloading was manual, and material trays lacked clearance for automated gripping in design;
- 2.Multiple-spec chips need end - part compatibility for equipment universality;
- 3.With untouchable chip surfaces, suction cups won't work; fixtures must be anti-static.

WC-1515

Copper carrier boards handling

Scan to watch videos

Product name	Product code	Quantity
Beak Module	DAC-1GN4030[H]/M Customized version	6
Control Unit	iPCU2-SMN	1



- 1.Soft-material grippers won't damage product surfaces or leave marks;
- 2.Soft grippers with embedded skeletons stay soft externally, boost clamping force, and prevent product bending during stable grasping, protecting high-value items;
- 3.Small-sized soft claws are expandable. Adding a profiling block at their ends can solve non-standard fixture design issues.

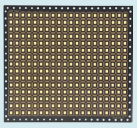

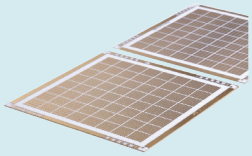

- 1.In semiconductor industry, no-mark-on-product-surface rule during carrier board handling makes suction cups unsuitable;
- 2.Semiconductor - industry copper plates, being costly, must not be dropped, bent or have their surfaces damaged during handling;
- 3.Process limitations create narrow space around copper plates, making end - fixture design and manufacture tough.

WC-1517

3D printed dental models

Scan to watch videos



Product name	Product code	Quantity
Beak Module	DAC-21413[P]	1

- 1.The soft beak is made of soft material, protecting the product surface and not scratching or deforming it;
- 2.It has strong versatility. There is no need to switch fixtures when grasping dental models of the same type but different sizes;
- 3.The material is safe and non-toxic and will not cause secondary pollution.





- 1.The application of 3D printing technology in the dental field is mature, such as dental crowns, dental bridges, retainers, etc. After production, they need to be detected;
- 2.The graspable positions of different products are different, and the end fixture needs to have strong versatility;
- 3.There are many materials for dental models and they cannot be scratched or deformed.

WC-1493

Opening and closing centrifuge tube lid

Scan to watch videos



Product name	Product code	Quantity
Beak Module	DAC-3GN51[H]/SN Customized version	1
Connect Module	CM-RG1840G18	1

- 1.Soft grippers have a simple structure, low usage cost, and are easy to maintain, not prone to malfunctions;
- 2.Soft grippers are driven by positive and negative pressure, with high opening and closing efficiency. Can adapt to a high operation frequency and work stably for a long time;
- 3.Soft grippers have a certain degree of chemical resistance. With a precise force control of 0.1N, they can effectively protect the integrity of the centrifuge tube, and are compatible with centrifuge tube caps of multiple specifications.



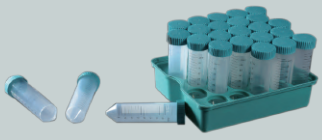

- 1.Centrifuge tubes are commonly in medical testing industry, opening and closing their lids is an indispensable part of automated testing equipment;
- 2.There are many specifications for centrifuge tubes, so the grippers need to have compatibility;
- 3.When handling centrifuge tubes containing biohazardous substances, toxic and harmful substances or radioactive substances, it may cause harm to the operators, and there is a high demand for automation.

WC-1856

*For the control unit and other accessories, please consult the account manager.

Aluminum cap inner-supporting

Scan to watch videos

Product name	Product code	Quantity
Beak Module	DAC-3B08[HAS]/S	8

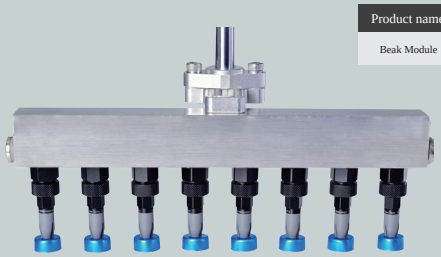

- 1.The soft grippers use inner support, eliminating the need to consider inner-side holes or gaskets on the workpiece;
- 2.Soft grippers, with a minimum size of 7mm, are lightweight and can be multi-arranged, enabling the use of small - load robotic arms;
- 3.Made of soft materials, soft grippers won't damage the workpiece. With options like dust-free and anti-static materials, they effectively prevent material-carrying issues.

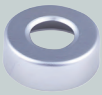

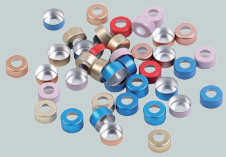

- 1.Medical cartridge bottle caps have gaskets or small holes, making it impossible for suction cups to grasp them stably;
- 2.With hundreds of closely-arranged aluminum caps in raw-material supply, fixtures must be small and lightweight;
- 3.The aluminum cap has an extremely thin, easily-damaged inner wall. It's lightweight and likely to carry extra materials during grasping.

WC-1813

Contact lenses picking up

Scan to watch videos



Product name	Product code	Quantity
Finger Module	DAC-3B14[P]/S	1
Connect Module	CM-SN51011B	1
Control Unit	iPCU2-HMV	1

- 1.Pure-soft-material grippers enable damage-free gripping. Positive/negative air pressure adjustment ensures flat material placement;
- 2.Soft grippers pass toxicological tests and are widely applicable in the medical field;
- 3.With a closed-structure design, soft grippers function normally when immersed in nursing solution.





- 1.The transparent, soft nature of contact lenses makes equipping fixtures for automated inspection a tough task;
- 2.Contact lenses demand flexible, clean fixtures; no pinching damage or contamination allowed;
- 3.Nursing solution during contact lens transfer rules out the use of suction cups.

WC-1156

Orthodontic Appliance Gripping

Scan to watch videos



Product name	Product code	Quantity
Beak Module	DAC-2GN2027[H]/SN(Custom Version)	1

- 1.Rochu gripper's silicone is soft and elastic, adapting to brace shapes to avoid scratches/deformation from rigid grippers (its end's contour-following design fits 10mm narrow slots);
- 2.Rochu soft ripper conforms to different braces(e.g., children's versions, molar distalization appliances)via sili cone deformation-no frequent fixture replacement, boosting production line flexibility;
- 3.Rochu soft gripper meets medical-grade hygiene standards (no pollution risk), and its clamping force and durability can be balanced by adjusting material hardness.



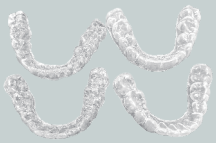

- 1.Invisible braces—soft, various styles (e.g., standard, children's)—need dynamic adjustment during gripping. Yet, pneumatic cylinder grippers' excessive force deforms them;
- 2.Complex braces need ±0.5mm positioning accuracy and no contact contamination, so fixtures must meet medical device cleanliness standards;
- 3.Handling equipment must collaborate efficiently with 3D printing, cleaning, etc. Modular replacement and durability issues cause high replacement costs.

WC-1904

Soft-Vibration Retrieval of Surgical Suture Needles

Scan to watch videos



Product name	Product code	Quantity
Beak Module	DAC-2051D5[P]/S	1
Flexible probe	SE-FP32	1
Optical fiber signal amplifier	SE-OF45N	1

- 1.The soft gripper uses adaptive deformation and air pressure control to stably grip different-spec needle bodies, avoiding scratches/breakages;
- 2.It adapts well to posture deviations (e.g., tilting) of vibratory bowl-conveyed needles and works with flexible bone sensors to detect gripping status in real time;
- 3.For sterile medical scenarios, the flexible gripper has a fully enclosed structure and medical-grade materials to lower medical safety risks.





- 1.Surgical needles have multiple specs—pneumatic cylinder grippers may make short ones slip or long ones hit the vibratory bowl wall, needing frequent clamping parameter adjustments;
- 2.Surgical needles weigh <1g; when the flexible vibratory bowl runs, needles shift, and pneumatic cylinder grippers may deform or pop them out due to excessive force;
- 3.Though pneumatic cylinder grippers can adjust force, they can't adapt to needle curved surfaces. Especially when needles tilt from the vibratory bowl, single grabs easily skew,preventing accurate placement.

WC-1065

*For the control unit and other accessories, please consult the account manager.

Packaging cheesecakes

Scan to watch videos

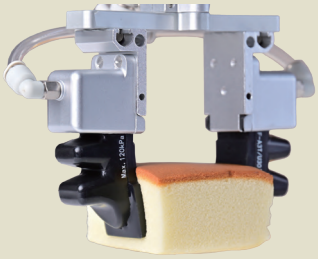

Product name	Product code	Quantity
Finger Module	FMA-A3V5/U30[P]	2

- 1.The material of the soft claw is soft and will not scratch the product. It is food-grade, safe and non-toxic;
- 2.The special wide finger surface will not leave marks on the cake surface, and the yield rate is 99.99%;
- 3.The cycle time is 50-60 pieces/min. It can be produced 24 hours a day, improving production and management efficiency.





- 1.In an automated cake production line, there are corresponding automatic production equipment for previous processes (such as whipping and baking). Due to the soft and easily deformed cake, the boxing process can only be completed by a large number of manual labor;
- 2.Suction cups and rigid grippers are easy to damage the product by suction or clamping, or the efficiency is too low.

WC-1460

Packaging mooncakes

Scan to watch videos

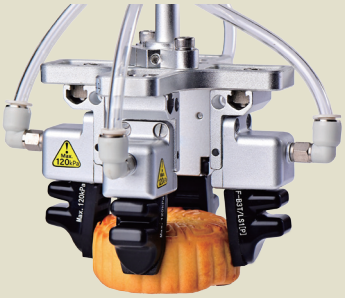

Product name	Product code	Quantity
Finger Module	FMA-B3V5/LS1[P]	4

- 1.Soft food-grade material, will not scratch the product, safe and non-toxic;
- 2.Modular design for convenient maintenance;
- 3.The cycle time is 50-60 pieces/min. It can be produced 24 hours a day, improving production and management efficiency.





- 1.Mooncakes are soft and oily on the surface and are easily deformed. Picking marks on the surface are not acceptable;
- 2.The previous grasping cycle requires a high speed. The subsequent packaging has placement requirements;
- 3.Neither suction cups nor rigid grippers can meet the requirements of automated packaging.

WC-1390

Ice-cream Handling

Scan to watch videos

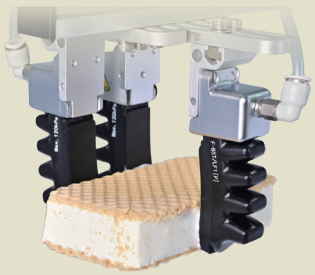

Product name	Product code	Quantity
Finger Module	FMA-B5V5/LF1[P]	3

- 1.Food-grade elastic soft fingers disperse clamping force. Their enveloping grip avoids dents, breaks or warps from metal clamps;
- 2.Modular soft fingers suit various product specs, boosting line flexibility. Multiple ones grip together, upping line efficiency;
- 3.Soft fingers endure cold, ease cleaning/disinfection. Closed-cavity design stops air pipes sucking in debris.





- 1.During ice-cream packaging, its surface melts slightly and gets sticky. Grasping must avoid pinching, and there's damage risk even after low-temp hardening;
- 2.Ice-cream blocks can have irregular shapes from production or storage, like edge melting or shrinking;
- 3.Ice-cream production lines, with temps often below - 18°C, need fixtures suitable for cold environments.

WC-1363

Biscuit Box Packaging

Scan to watch videos



Product name	Product code	Quantity
Beak Module	DAC-1GN4030[H]/M Customized version	2
Control Unit	iPCU2-SMN	1

- 1.Soft-material grippers with adjustable, controllable clamping force won't crush biscuits;
- 2.Profiled soft grippers with internal skeletal structure can stably clamp multiple loose-packaged biscuits;
- 3.Soft grippers, simple-structured and lightweight, save robot's effective load. Their small size saves space.





- 1.Ensuring packaging line efficiency, multiple bagged biscuits must be vertically & synchronously boxed. Their special posture rules out suction cups;
- 2.Biscuits' fragility prohibits air cylinder use. Also, air cylinders are heavy, and multiple-set synchronous grasping needs a high-load robot;
- 3.Limited biscuit-blanking spacing leaves little room for grippers.

WC-1538

*For the control unit and other accessories, please consult the account manager.

Sorting of Egg Dumplings

Scan to watch videos



Product name	Product code	Quantity
Finger Module	FMA-A3V5/U30[PGS]	2
Connect Module	SMP-2S	1
Control Unit	LCU-H_A	1

- 1.Rochu soft gripper is made of food-grade silicone material which can withstand high-temperature of up to 220℃ wihtout damage the egg dumplings;
- 2.It helps customers increase production capacity, matching the highest efficiency of the machine, and at the same time protects the egg dumplings from being contaminated and damaged;
- 3.It has opened a new era of automated packaging for egg dumplings.





- 1.During the production of egg dumplings, pressing, sorting, and boxing need to be carried out in a high-temperature state. Manual sorting poses a risk of being scalded;
- 2.This scenario has extremely high requirements for efficiency;
- 3.Traditional suction cup cylinders will damage the integrity of the egg dumplings and are not suitable for this scenario.

WC-2021

Meat sausage grasping

Scan to watch videos

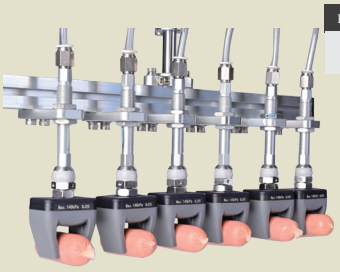

Product name	Product code	Quantity
Beak Module	DAC-2G2027[H]/SN	6
Control Unit	iPCU2-HMN	1

- 1.The soft grippers are made of food-grade materials, which won't scratch the products. They are safe and non-toxic;
- 2.Small and lightweight soft grippers can be closely arranged in dozens to meet production needs;
- 3.Soft grippers feature stronger compatibility and great anti - slip properties.





- 1.Food industry requires to operate 24 hours a day, and are extremely high requirements for food safety;
- 2.When grasping multiple arranged sausages, there are requirements for the size of the fixtures;
- 3.Sausages, with diameters from 20 - 22 mm, require fixtures to be compatible. Their greasy surface makes them slip - prone during grasping.

WC-1645

Strawberry Sorting

Scan to watch videos





Product name	Product code	Quantity
Beak Module	DAC-2GN2252[H]/SN	1
Soft Wing	N-Y2617B[R]	2

- 1.The contact surface of soft wings is extremely soft and disperses pressure evenly, with the skin integrity rate of strawberries reaching 99.9%;
- 2.Soft wings are made of food-grade material, which will not leave any harmful substances and meets the safe production standards;
- 3.The flexible material can adapt to strawberries of different sizes and shapes, with no parameter adjustment required when switching different varieties.





- 1.Strawberries are tender and juicy with a pericarp thickness of only tens of micrometers; oxidation and mold growth will start within 10 minutes once they are crushed or scratched;
- 2.To ensure long-distance transportation and implement differentiated pricing, strawberries need to be graded and boxed according to their appearance, size, ripeness and defects;
- 3.When ordinary grippers handle strawberries with irregular shapes, frequent adjustment of the gripper's force and angle is required, and the strawberries are highly prone to damage, resulting in the failure to realize automation.

WC-3727

Instant Noodle Block Boxing

Scan to watch videos





Product name	Product code	Quantity
Finger Module	FMA-A4V4/LS1[P]	4
Control Unit	iPCU2-HMN	1

- 1.Soft fingers are made of food-grade silicone material, and disperse the clamping pressure evenly on fried dough sheets through flexible enveloping gripping;
- 2.The material of soft fingers complies with FDA food contact safety standards, with no peculiar smell and no crumb residue, and is easy to clean;
- 3.Soft finger grippers cooperate with DELTA robots to meet the requirements of high-speed gripping and boxing, with a cycle time of 50-60 cycles per minute.





- 1.Fried dough sheets feature a porous honeycomb structure, with their brims and corners having high brittleness and being prone to cracking and crumbing;
- 2.Composite plastic films are adopted for packaging; suction cups tend to suck and tear the film coating, causing damage and impairing the airtightness of the package;
- 3.Rigid grippers have a small contact area, leading to localized pressure concentration on the packaged products; this results in a high part drop rate, making it difficult to realize automated boxing.

WC-3774

*For the control unit and other accessories, please consult the account manager.

Baguette transfer line grabbing

Scan to watch videos



Product name	Product code	Quantity
Finger Module	FMA-A4V5/U42[P]	4

- 1.Soft grippers are made of food-grade silicone material, complying with food contact standards such as FDA and EC1935, and meeting the hygiene requirements for ready-to-eat food;
- 2.Flexible grippers can achieve precise force control and will not cause any scratches or crush damage to baguettes whatsoever;
- 3.Soft grippers feature a closed cavity design, so air pipes will not suck in foreign matter; the design also facilitates easy cleaning and disinfection, ensuring food safety.





- 1.Baked baguettes are soft, fluffy and irregular in shape (varying in length, thickness and curvature); their surfaces are prone to scratches and indentations, requiring transfer to another production line for hole-punching in post-processing;
- 2.Pneumatic cylinder profiling cannot adapt to the irregular shape of baguettes, which is likely to scratch the surface of baguettes and cause product defects;
- 3.Suction cups cannot achieve effective adsorption on baguettes, and they also feature high air consumption.

WC-2128

Steamed Bun Boxing

Scan to watch videos



Product name	Product code	Quantity
Beak Module	DAC-4BG64[PAS]/S	1

- 1.Soft grippers are made of food-grade silicone material, complying with food contact standards such as FDA and EC1935, and meeting the hygiene requirements for ready-to-eat food;
- 2.Flexible grippers can achieve precise force control, with uniform contact pressure adapting to the soft texture of steamed buns, and the defective rate caused by shape collapse and filling spillage can be reduced to below 0.01%;
- 3.Soft grippers feature a closed cavity design, so air pipes will not suck in foreign matter; the design also facilitates easy cleaning and disinfection, ensuring food safety.





- 1.Steamed buns are soft in texture with irregular incoming material shapes, prone to deformation, and their surfaces are highly sticky;
- 2.Manual boxing features low efficiency, coupled with high staff turnover, which leads to elevated management costs;
- 3.The clamping force of pneumatic cylinders is uncontrollable: excessive force will squeeze the buns flat (causing filling spillage and shape collapse), while insufficient force will result in failure to grip them. Cylinders cannot adapt to the dimensional tolerances of steamed buns, and suction cups easily rupture the buns, making them inapplicable to the automated boxing scenario.

WC-3536

Loading and unloading of cosmetic packaging materials

Scan to watch videos



Product name	Product code	Quantity
Beak Module	DAC-4G64[H]/S	1

- 1.The material of the gripper is soft, effectively protecting the product surface;
- 2.With a large stroke and strong versatility, there is no need to frequently switch grippers;
- 3.Standardized module, convenient for installation and maintenance.





- 1.There are many kinds of cosmetic packaging materials with different shapes. The automatic filling line needs a certain degree of versatility;
- 2.The surface requirements are high and it cannot be scratched or secondary polluted;
- 3.Traditional fixtures and suction tools cannot meet versatility.

WC-1325

Resin lens molds handling

Scan to watch videos

Product name	Product code	Quantity
Finger Module	FMA-B5V4/LF1[H] Customized version	4
Connect Module	SMP-4S	1

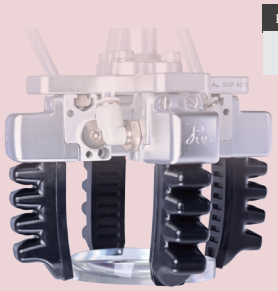

- 1.Soft-material fingers prevent mold damage, with a 500 - 800 pieces/hour capacity;
- 2.Soft fingers adapt to mold shapes, grip stably, and enable automated frame collection;
- 3.Custom-material soft fingers have enhanced wear-resistance against mold-surface abrasion.



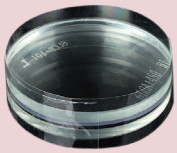

- 1.After resin lens mold is opened and de-glued, its upper and lower parts need auto-recycling;
- 2.Post-opening, separated upper and lower molds can't be suction-gripped, they're fragile;
- 3.Resin lens molds vary in curvature, edge, contour and size, demanding compatibility.

WC-1369

*For the control unit and other accessories, please consult the account manager.

Foundation casing handling

Scan to watch videos



Product name	Product code	Quantity
Beak Module	DAC-1GN2521[H]/SN Customized version	4

- 1.Soft grippers materials are soft, dispersing contact pressure, avoiding local stress concentration, protecting air - cushion surface integrity and preventing damage;
- 2.The flexible material can self-adapt to the curved surface of the casing. It can be freely combined to adjust spacing and can have an external profiling block, showing strong compatibility;
- 3.The soft gripper has a simple, durable and replaceable structure. It suits high - speed assembly line production. Its light weight reduces vibration and impact on precision components.





- 1.The foundation casing usually has a special high-gloss coating, and rigid fixtures (such as metal clamping claws) may cause scratches or indentations upon contact;
- 2.The foundation casing may be designed with an arc shape, an irregular shape, or a thin-walled structure, making the design of irregular fixtures quite challenging;
- 3.The production line may need to handle casings of different sizes or models, which requires the fixtures to have compatibility. Moreover, due to the high requirements for the production cycle, the fixtures need to have high clamping stability.

WC-1828

E-cigarette mouthpieces feeding

Scan to watch videos

Product name	Product code	Quantity
Beak Module	DAC-21413[PW]	4



- 1.The soft gripper will not damage the e-cigarette mouthpieces, and multiple arrangements can adapt to mold's narrow space;
- 2.White soft gripper can be customized to provide a high-contrast background for dark-colored workpieces. The recognition accuracy rate is 100%, which can avoid damage to the mold.





- 1.China is important exporter of e-cigarettes, with a wide variety of designs to meet the different market demands for e-cigarettes;
- 2.Plastic mouthpieces are one of the main exterior components of e-cigarettes, which have high requirements for appearance and strict quality control during the injection molding process;
- 3.The black - gray soft gripper are similar in color to the dark - colored mouthpieces, which affects

WC-1849

Loading and unloading of lipstick tubes

Scan to watch videos

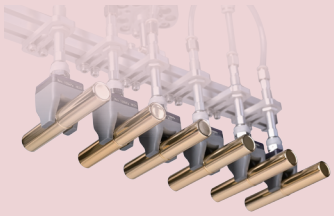

Product name	Product code	Quantity
Beak Module	DAC-2G1217[HAS]/SN	6
Control Unit	iPCU2-SMV	1

- 1.The opening and closing compatibility of a single type of soft gripper can reach 20-30mm. It can be compatible with multiple types of lipstick tubes without the need to adjust the air pressure;
- 2.The expandable AS material ensures that there are no scratches or marks on the appearance. Multiplearrangements can be made to improve production efficiency;
- 3.The standard soft gripper save the time for selecting and designing the gripper and also reduce the management cost.





- 1.In order to meet the more diversified market demands, lipstick products have a variety of size specifications and are becoming increasingly irregular in shape;
- 2.The production demand of small batches and multiple lots requires extremely high compatibility of the automated end-effector. Moreover, high-gloss processes such as chrome plating have high requirements for the surface;
- 3.When facing different specifications, traditional air cylinders need to replace the fixtures frequently but the design is long and the cost is high. Additionally, it generates hidden costs such as the management of the fixture library.

WC-2006

Pen Cap Injection Molding Pick-Up



Scan to watch videos



Product name	Product code	Quantity
Beak Module	DAC-3C24[HAS]/S	6

- 1.The full-silicone soft gripper uses bionic patterns in its claw center for 0.1mm-level curved surface adaptive gripping of micro pen caps;
- 2.The service life of the Rochu soft gripper exceeds 1.5 million cycles, eliminating the need for frequent replacement and saving production line time;
- 3.For AS material (acrylonitrile-styrene copolymer), the measured material carry-over rate is reduced to 0.2% (industry average: 5%), and the soft gripper increases the yield rate from 82% to 99.6%.





- 1.Pneumatic cylinder grippers' rigid contact deforms thin-walled injection-molded parts (thickness <0.5mm) during gripping;
- 2.Multi-spec production needs frequent gripper replacement, leading to cumbersome, time-consuming debugging;
- 3.Pneumatic cylinder grippers have urethane foam—this foam needs frequent replacement and easily leaves marks/contaminates workpieces.

WC-1455

*For the control unit and other accessories, please consult the account manager.

Vertical Gripping of Eyeglass Lenses

Scan to watch videos



Product name	Product code	Quantity
Beak Module	DAC-2G2252[HAS]/SN	1
Soft Wing	N-Y2617B[R]	2

- 1.Soft grippers are made of flexible materials, and their precise force control enables the adjustment of clamping force with a precision of 0.1N;
- 2.The combined solution of soft grippers and soft wings grips eyeglass lenses from their side edges, without contacting the lens surfaces and only making contact with 1/3 of the edge area, which adapts to the space constraints of existing material trays;
- 3.Dust-proof materials are optional for the soft wings, precluding any contamination to the lenses.



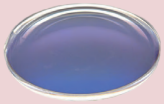

- 1.Eyeglass lenses have poor impact resistance, and their surface coatings are fragile, making the lenses prone to breakage and scratching;
- 2.The gripping station features compact space; traditional grippers are relatively bulky and tend to interfere with surrounding positioning jigs, which restricts the flexibility of the production line layout;
- 3.During manual gripping, fingers are likely to come into contact with the lenses and leave fingerprints or grease residues, leading to a time-consuming subsequent cleaning process (30-40 seconds for cleaning a single piece) and thus reducing the overall production line takt time.

WC-3310

Stratification of clothing cut pieces

Scan to watch videos



Product name	Product code	Quantity
Beak Module	DAC-H5024[P]/S	6
Connector Part	CM-S04	6
Slide Mounting Plate	SMP-14	6
Flange Connection Module	FCM-R03	1
Profile	P-X2525<500>	4
Connector Part	CP-197	2
Rotary Joint	CM-RC14W5N5	6

- 1.The "Soft Boot" gripper can achieve precise stratification through pneumatic adjustment, has no requirements for environmental temperature and humidity, and does not damage the fabric;
- 2.The "Soft Boot" gripper can adapt to fabrics of different materials and thicknesses;
- 3.The unique structural design ensures a blanking accuracy of 0.05mm.





- 1.The clothing industry relies heavily on manual labor and has an extremely high demand for automation;
- 2.In the clothing industry, there are multiple layers of incoming cut pieces, which are soft, breathable and come in many varieties;
- 3.The separation of single cut pieces has always been a difficult problem in the industry.

WC-1491

Loading and unloading of automobile lamp shades

Scan to watch videos





Product name	Product code	Quantity
Finger Module	FMA-A8V5/LS8[HAS]	8
Accessory Package	PK-AV5	8

- 1.The flexible gripper does not touch the surface of the product and will not scratch or cause dirt. The yield rate is 100%;
- 2.It has a large compatibility range. For left-right symmetrical lamp shades, there is no need to switch fixture;
- 3.The entire set of fixtures is light in weight and saves end load.

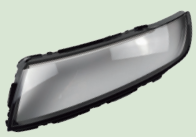



- 1.After the automobile lamp shade is painted and dried, annealing treatment is required to increase the strength, and the product surface cannot be touched;
- 2.The design cost of non-standard rigid fixtures is high, and they are easy to scratch the surface and form dirt;
- 3.Automobile lamp products are usually produced in small batches and multiple batches, and non-standard fixtures have high inventory pressure.

WC-1489

Connectors injection molding pick-up

Scan to watch videos

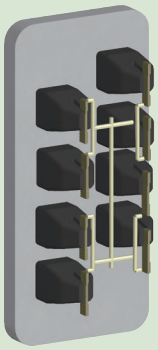

Product name	Product code	Quantity
Beak Module	DAC-20802[PAS]/S	8

- 1.The soft beak is small and can be arranged closely. Compared with the vacuum suction tool scheme, it saves design cost and reduces air consumption;
- 2.The force control accuracy is 0.1N, ensuring 100% yield rate and reducing environmental noise;
- 3.The material is high temperature resistant and light in weight, saving the end load.

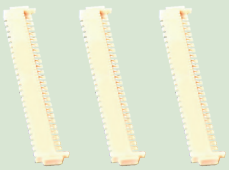



- 1.After the injection molding of the connector plastic part, it is not completely cooled. The hollow structure is easy to deform. It is difficult to grasp products with a thickness of 1~3 mm;
- 2.In injection molding, there are usually multiple cavities in one mold, and multiple products need to be taken out of the mold simultaneously;
- 3.The suction cup cannot suck stably, and the steel claw will deform it or there is insufficient space for arrangement.

WC-1394

*For the control unit and other accessories, please consult the account manager.

O-ring internal support

Scan to watch videos



Product name	Product code	Quantity
Beak Module	DAC-3B14[P]/S	1
Connection Module	CM-S04	1

- 1.Simple structure saves design costs and has a low transformation cost;
- 2.There are multiple schemes such as internal gripping and gripping of wire diameters to deal with products of different size;
- 3.High discharging precision improves the stability of the sleeve shaft.



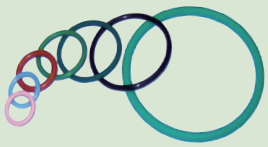

- 1.The wire diameter of the O-ring is small, and the cylinder gripper is easy to deform it;
- 2.Ordinary suction cups cannot suck. The design of profiling suction tools is complex and the dropout rate is high;
- 3.The overall weight of the profiling suction tool scheme is large, increasing the load on the robot.

WC-0836

Powder Metallurgy Parts Handling

Scan to watch videos



Product name	Product code	Quantity
Beak Module	DAC-4B40[HAS]/S	1

- 1.The soft grippers, made of soft materials and featuring an innovative design, can flexibly adapt to powder metallurgy parts of different shapes and sizes;
- 2.Soft grippers stop secondary damage in automated powder-metallurgy part handling, cutting post-sintering defect rates;
- 3.Different standard soft grippers suit circular pipe fittings of varying sizes.





- 1.Powder metallurgy uses powder to make formed parts and is widely used in auto, electronics, etc;
- 2.Pre-sintering, powder metallurgy parts have loose structures, are easily damaged, and circular ones are hard to auto-stack on pallets;
- 3.More small-batch, multi-spec proofing products mean high demand for automated end-effectors.

WC-0262

Engine bearing shells grasping

Scan to watch videos



Product name	Product code	Quantity
Beak Module	DAC-20603[H]/S	2
Control Unit	iPCU2-HMV	1

- 1.The soft grippers are made of soft materials, which can effectively achieve gentle handling and prevent damage to the outer surface of the workpiece;
- 2.The soft grippers, small and light, can grip effectively in a narrow space;
- 3.Compared with traditional fixtures, the soft grippers have stronger compatibility.





- 1.The traditional installation of engine bearing shells uses air cylinder with end profiling, which is likely to damage the workpiece;
- 2.When the bearing shells are delivered as raw materials, they are densely arranged, so there are high requirements for the size of the end fixture;
- 3.The engine bearing shells vary in shape and size, so the end fixture is required to have a certain degree of compatibility.

WC-1872

5kg In-Vehicle Display Handling

Scan to watch videos

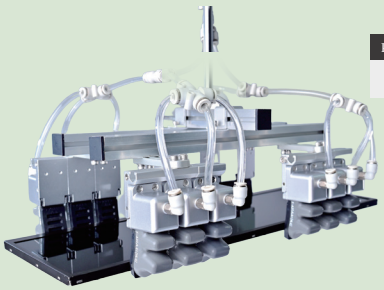

Product name	Product code	Quantity
Beak Module	FMA-A3V5/LS1[HLGAS]	12

- 1.Rochu soft gripper uses anti-static material (surface resistance 10^6-$10^9\Omega$), preventing static-related hidden damage to display modules during handling and boosting product yield;
- 2.Rochu gripper has non-marking material and adaptive gripping, evenly distributing force to eliminate screen indentations/scratches from traditional suction cups/pneumatic cylinders;
- 3.Rochu soft gripper meets automated lines' ±0.05mm high-precision positioning needs, reducing process interruptions from handling errors.





- 1.Traditional suction cups/metal pneumatic cylinders easily build static, but in-vehicle displays are static-sensitive (surface resistance needs 10^6–$10^9\Omega$), risking hidden screen damage during handling;
- 2.Pneumatic cylinders' rigid contact or suction cups' uneven force may indent/scratch screen edges/surfaces, hurting display module yield;
- 3.Display panels need higher support air pressure; traditional suction cups often drop panels due to air pressure fluctuations during handling.

WC-2125

*For the control unit and other accessories, please consult the account manager.

Flexible Feeding of Automotive Connectors

Scan to watch videos



Product name	Product code	Quantity
Beak Module	DAC-2G2032[H]/SN	1

- 1.Flexible grippers achieve precise force control and only grip the main body area, with no risk of loosening for embedded lock components, leading to a significant reduction in the rework rate of the subsequent harness mating process;
- 2.The silicone material will not scratch the surface markings, avoiding line stop and adjustment caused by marking recognition errors in the assembly process;
- 3.Soft grippers can adapt to the dimensional and structural differences of connectors of different specifications, enabling SKU switching without fixture replacement.



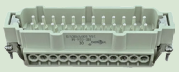

- 1.New energy vehicles feature a short upgrade and replacement cycle. As connectors serve as the physical interfaces for the transmission of electrical signals, power and data, their automated assembly is faced with the challenges of high variety and high precision;
- 2.The surface of the connector main body is marked with model identifiers for assembly identification, and any wear and tear on these markings may affect the circulation efficiency of the production line;
- 3. Due to their special-shaped structures, neither suction cups nor pneumatic cylinders can achieve perfect compatibility and adaptation.

WC-2502

CNC blade placement

Scan to watch videos



Product name	Product code	Quantity
Beak Module	DAC-3G20[H]/S+N27[SSD]	1

- 1.Soft beak end profiling scheme, with a force control accuracy of 0.1N and no damage to products;
- 2.Compatible with stable grasping for inner diameters of 3~7 mm. No need to switch grippers;
- 3.Simple structure and convenient maintenance.

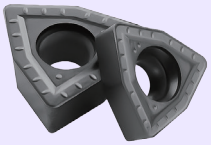

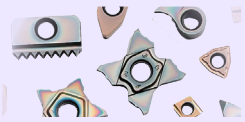

- 1.After the blade powder is formed, it is taken and placed on a tray. Before sintering, it is fragile and the blade edge cannot be touched;
- 2.Inner diameter is 3~7 mm. The traditional cylinder scheme is difficult to achieve compatibility;
- 3.The handling speed is relatively fast, and there is a high requirement for end stability. Dropped parts may cause damage to the mold.

WC-1436

Feeding for fishhook

Scan to watch videos



Product name	Product code	Quantity
Beak Module	DAC-20201[H]/S	1

- 1.Soft beak has its own elastic buffer. The grasping stability is more than 99%, ensuring production efficiency;
- 2.Standard module saves the cost of non-standard design;
- 3.Light in weight, it can be adapted to a flexible feeding station with a small load.





- 1.Fishhooks are small, irregular in shape, and come in a wide variety. After being picked up by a soft vibration method, they are placed in a mold;
- 2.Vacuum suction tools and steel claws cannot stably suck. The design cost is high;
- 3.Products need to be switched frequently, and there is a high requirement for the universality of the end.

WC-0355

Packing spandex paper tubes

Scan to watch videos

Product name	Product code	Quantity
Beak Module	DAC-4B70[P]/S	25

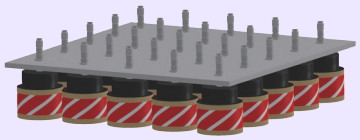

- 1.The material of the soft claw is soft and will not damage the tape paper core, ensuring 100% production yield;
- 2.The soft claw has a simple structure and is small in size. Dozens of them can be arranged closely, greatly ensuring the packing efficiency and helping the production capacity reach 2-3 million pieces per day;
- 3.The grippers have high consistency in opening and closing, which can ensure the stability of multiple synchronous gripping.





- 1.The packing link of spandex paper tubes has long relied on a large number of manual labor. For the automated transformation, in order to ensure the packing efficiency, the entire layer (dozens of them) needs to be clamped simultaneously;
- 2.Suction cups cannot suck. Rigid profiling grippers are too large in structure to be arranged in a close matrix.

WC-1453

*For the control unit and other accessories, please consult the account manager.

KIT

Kit Combination



DK

Soft Beak Kit

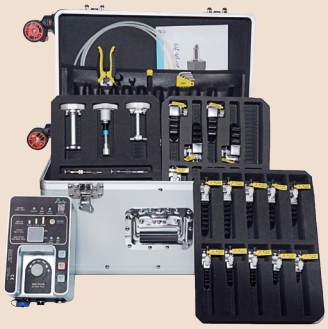

DK

Omnipotence Kit

DK-1.37 Soft Beak Expansion Kit



DK-1.37 Soft Gripper Expansion Kit

·Soft gripper expansion kit, covering workpiece gripping solutions from 0-8 kg;

·Contains 86 soft grippers, 4 connecting rods, 8 connectors, 4 flexible bone probes, 2 amplifiers, and 1 driver;

·GN internal skeleton version supports DIY expansion and contouring, enabling rich design options;

·Applicable scenarios: flexible feeding stations, testing equipment, injection molding unloading, semiconductor handling, etc.



DAM-1GN2018[H]/SN DAM-1GN2521[H]/SN DAM-1GN3024[H]/SN DAM-1GN3527[H]/SN DAM-2G1012[H]/SN DAM-2G1217[H]/SN DAM-2G1622[H]/SN DAM-2GN2227[H]/SN DAM-2GN2232[H]/SN DAM-2GN2237[H]/SN



DAM-2GN2242[H]/SN DAM-2GN2247[H]/SN DAM-2GN2252[H]/SN DAM-2GN2257[H]/SN DAM-2GN4067[H]/SN DAC-2GN4087[H]/M DAC-1G071010[P]/S DAC-1GN4030[H]/M DAC-1GN5040[H]/M DAC-1GN7056[H]/M



DAC-2051D5[P]/S DAC-20802[P] DAC-2G1624[HB]/S DAC-2G0712[LH]/S DAC-21608[P] DAC-20201[H]/S DAC-20606[P] DAC-21413[P] DAC-20005V[P] DAC-20006[P]



DAC-2NH1107[P]/S DAC-20301[H]/S DAC-22219[P]/M DAC-21812[P] DAC-21D204[H]/S DAC-2G1211[H] DAC-20603[H]/S DAC-2G1121[HB]/S DAC-20501[H]/S DAC-2102D5[H]/S



DAC-2V0401[P]/S DAC-3A07[H]/S DAC-3D20[H] DAC-3G20[H]/S+N27 DAC-3KN22[H]/S DAC-3AB20[H] DAC-3B08[H]/S DAC-3B18[P]/S DAC-3SA20[H]/S DAC-3B12[H]/S



DAC-3B10[H]/S DAC-3C12[H]/S DAC-3B13[H]/S DAC-3A18[H]/S DAC-3BA14[H]/S DAC-3B14[P]/S DAC-3B24[H]/S DAC-3A15[P]/S DAC-3C24[H]/S DAC-3G20[H]/S



DAC-3GN51[H]/SN DAC-3A20[H]/S DAC-4G22[H]/SN DAC-4G27[H]/SN DAC-4G34[H]/SN DAC-4G39[H]/SN DAC-4G40[H]/S DAC-4G44[H]/S DAC-4G51[H]/SN DAC-4G58[H]/SN



DAC-4H18[H]/S DAC-4B18[P]/S DAC-4B30[H]/S DAC-4B32[H]/S DAC-4B50[P]/S DAC-4A24[H]/S DAC-4A30[P]/M DAC-4B40[H]/S DAC-4G64[H]/S DAC-H5024[P]/S

Soft Beak X86 (Some models come in quantities of two.)



SE-FP31 SE-FP32 SE-FP34 SE-FP35

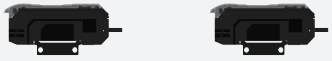

SE-OF45N SE-OF45P

Flexible bone probe X4 Optical fiber signal amplifier X2



CM-S04*2 CM-RG1840G18*2 PN-CW5W18L*2 PN-CW18W18L*2 CM-RC18W18N18*1 CM-RC14W5N5*1 PN-CW5W5L*2

Rod components X12

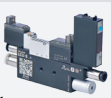

Control Unit X 1 LCU-S



Box X 1 DK-1.37 Outer Box

DK-1.31 Soft Beak Expansion Kit



DK-1.31 Soft Beak Expansion Kit

- Used for 0-55mm small and mico workpiece grip or internal grip;
- Contains 40 types of soft beaks and 4 types of connecting rods;
- Applicable industries: flexible feeding station, testing equipment, injection molding blanking, etc.

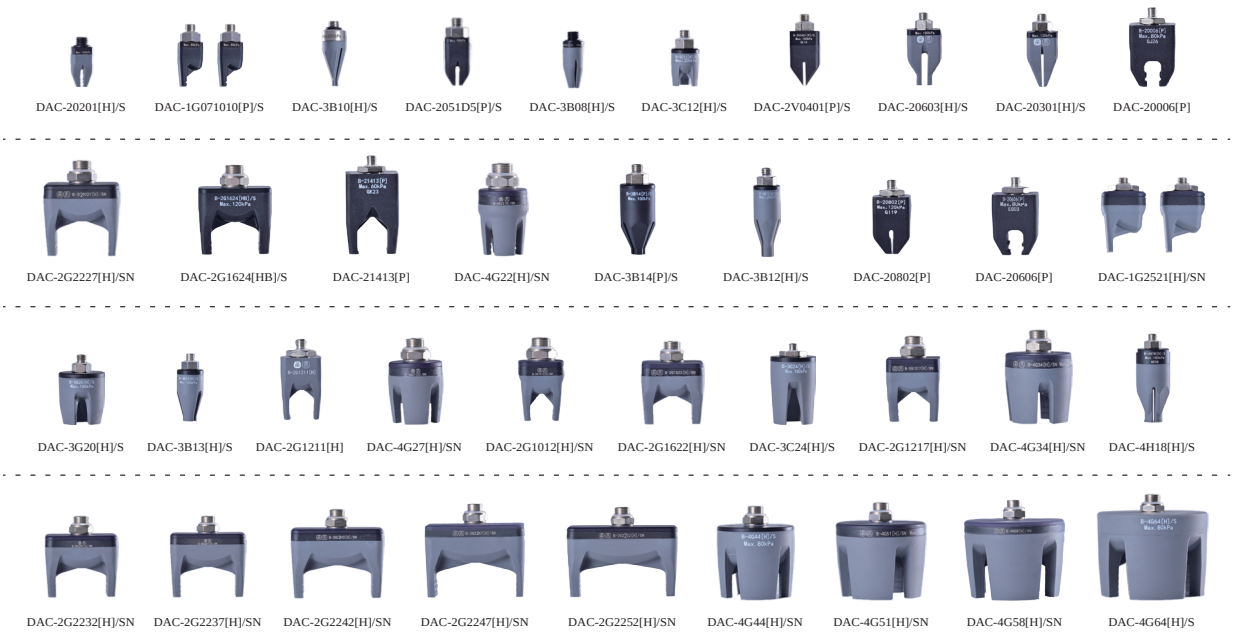

Soft Beak X 40



Rod components X4



Box X1

DK-1.31 Outer Box

Application case



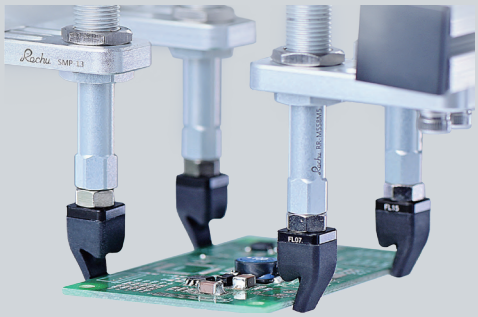

DK-1.31 Soft Beak Expansion Kit



DK-1.31 Soft Beak Expansion Kit

- Used for 0-55mm small and mico workpiece grip or internal grip;
- Contains 40 types of soft beaks and 4 types of connecting rods;
- Applicable industries: flexible feeding station, testing equipment, injection molding blanking, etc.

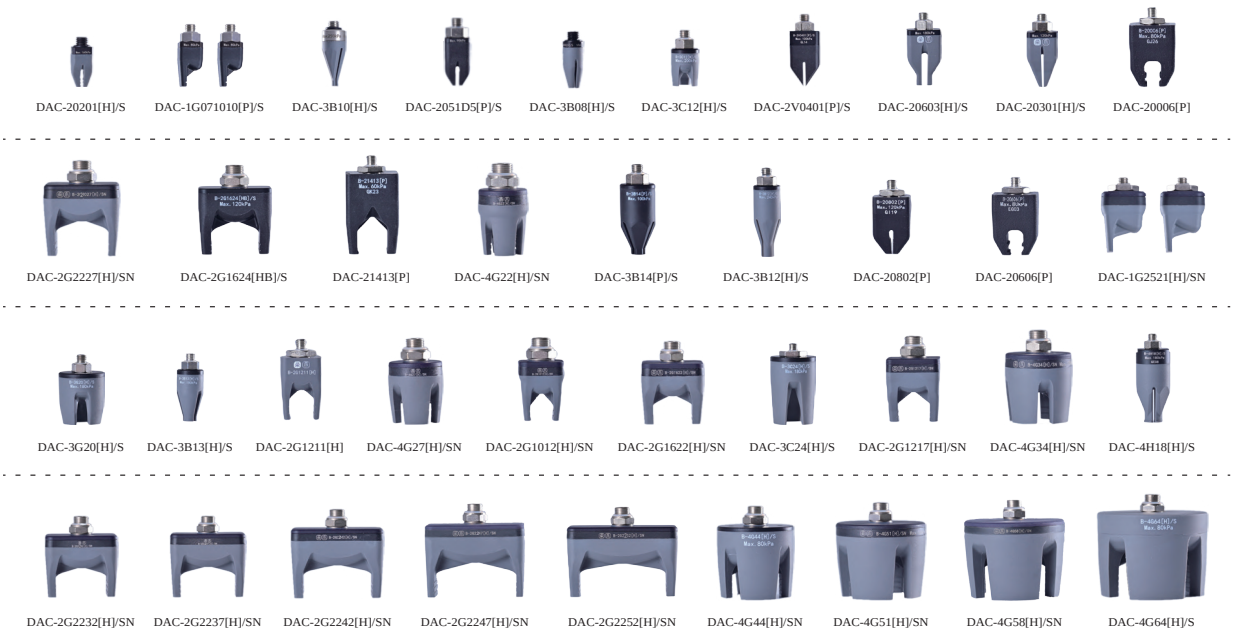

Soft Beak X 40



Rod components X4



Box X1

DK-1.31 Outer Box

Application case



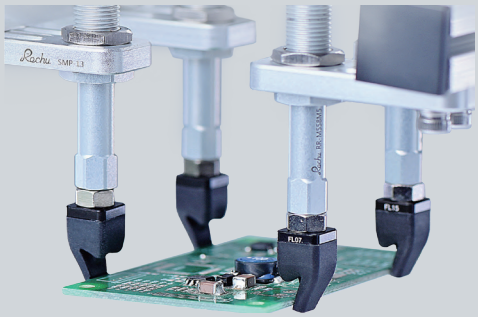

DK-2.0 Omnipotence Kit

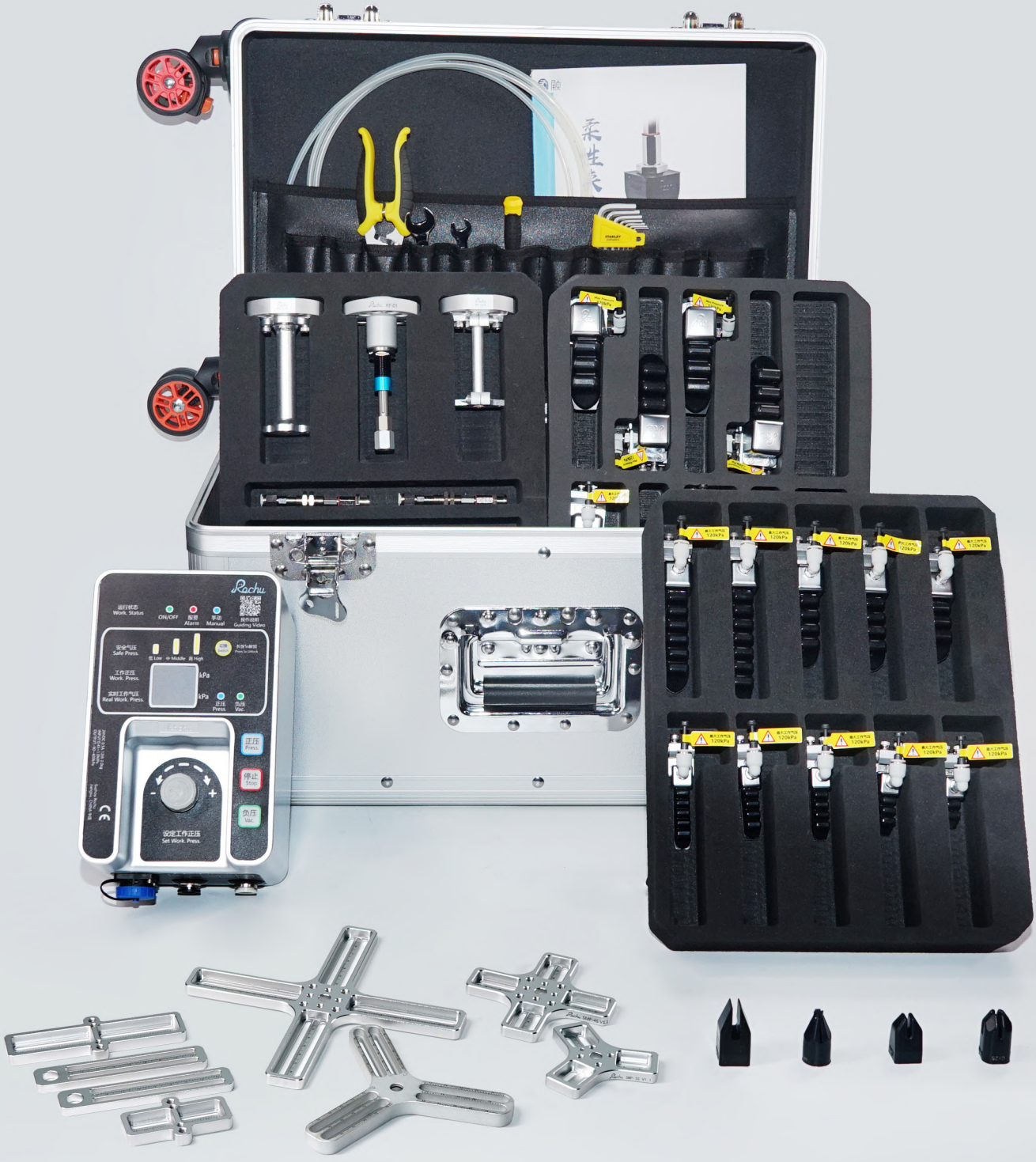

DK-2.0 Omnipotence Kit

- Contains a full range of Rochu grippers from beaks to fingers;
- Can be used without additional accessories and tools. Modules can be assembled and tested quickly in minutes;
- Contains a standard plug-and-play control unit that can be driven by compressed air or power;
- It can be uesd for the food fresh,3C electronic parts.clothing fabrics,and auto parts industry,etc.

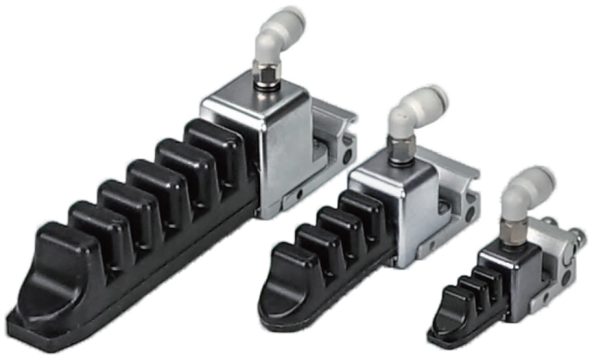

Finger Module X22

The actual number of soft finger models can be matched according to actual requirements



PK-AP345

Parts kit X1



PK-TO

Tools kit X1



FCM-R03 X2 FCM-R08

FCM-S01 CM-S04 X2

Connection Modules X6

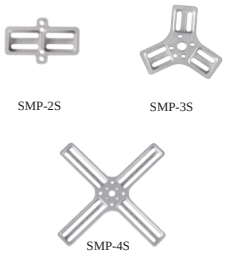

SMP-2S SMP-3S

SMP-4S

Slide Mounting Plate X8



B-20802[P] B-20006[P] B-3B14[P]/S B-4B18[P]/S

Beak Module X4



iPCU2-SMN Integrated Passive Control Unit

Control Unit X1



OP-07

Trolley case X1



BM / B

Beak Module/ Soft Beak



Unicuspid Soft Beak



Bicuspid Soft Beak

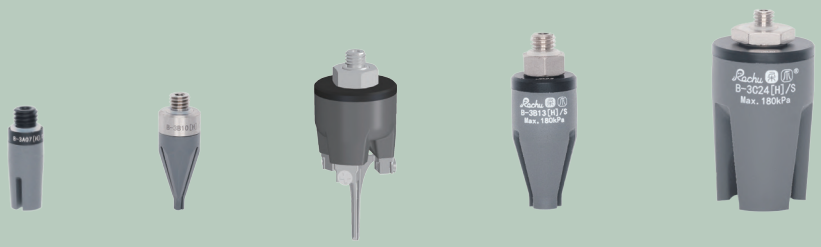

Tricuspid Soft Beak



Quadricuspid Soft Beak



Soft Anemone



Soft Boots

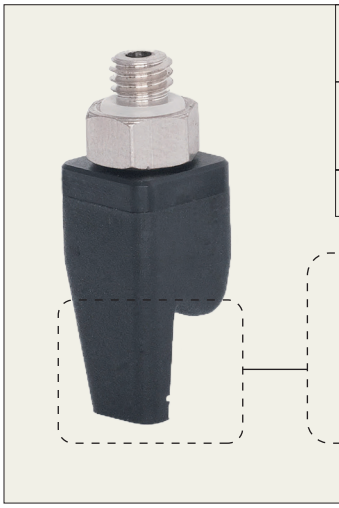

DAC-1G071010[P]/S Direct-through P Type		DAL-1G071010[P]/S Side-through P Type	
DAC-1G071010[PAS]/S Direct-through Dust-free P Type		DAL-1G071010[PAS]/S Side-through Dust-free P Type	
Weight	4g	**Weight**	15.5g



Product features

- The single-finger beak can be modularly combined. Fingertip opens under pressure and clamps in a vacuum. It is recommended to be used with Rochu control unit.
- Soft beak material is divided into Normal Material [P] and Dust-free Normal Material [PAS]. When the workpiece is light, or very soft, easy to adhere to adsorp on the soft beak, Dust-free Normal Material [PAS] is preferred.
- Food-grade material, direct food contact approved.

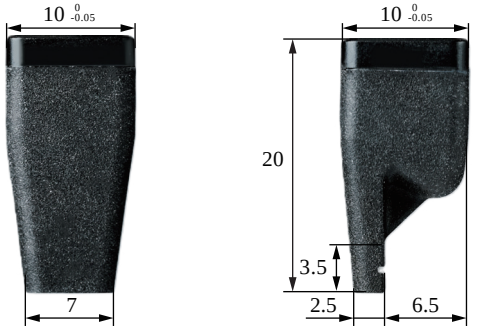

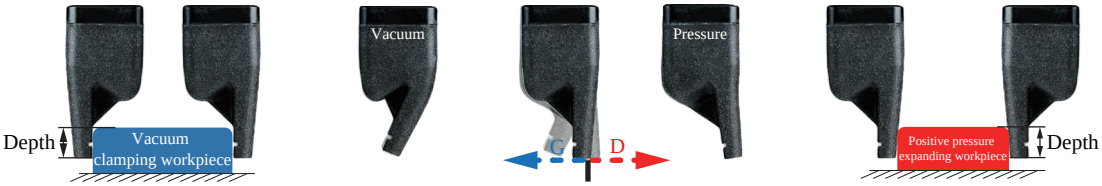

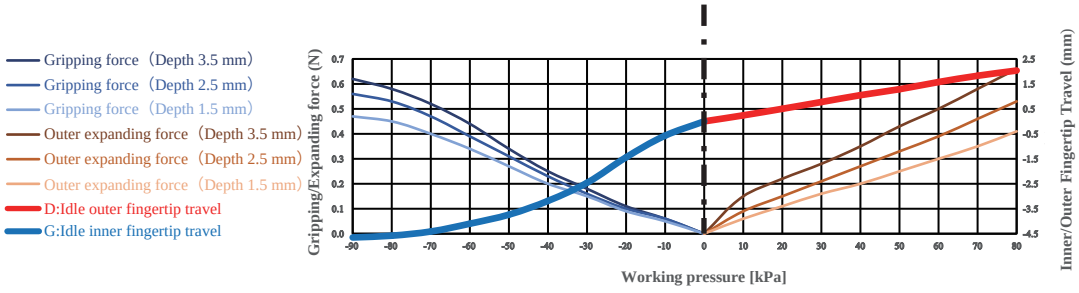

Paremeter

Gripping range	—	Gripping force	0-0.7N	Theoretical gripping load**	0-17g	Ideal gripping workpiece size*	—
Internal gripping range	—	Internal gripping force	—	Theoretical internal gripping load**	—	Ideal internal gripping workpiece size*	—
Joint size	M5	Life time***	1.5 million times	Contact Temperature	<220℃	Safe pressure***	<80kPa

*: The width of the cuboid that generates the maximum gripping force (two-finger gripping), the outer diameter of the cylinder (multi-finger gripping), the width of the square hole (two-finger internal gripping), or the inner diameter of the circular hole (multi-finger internal gripping);
**: Only the theoretical load of the ideal workpiece under standard working conditions is marked for reference and comparison. The real load capacity is also affected by factors such as the surface structure and roughness of the workpiece. Please take the measured data as the standard;
***: The working air pressure and the surface roughness of the workpiece in the usage scenario may have different degrees of impact on the life-time. Please configure Rochu control Unit. Do not exceed the safe air pressure.

DAC Straight Fitting Installation

Scan to watch videos



DAL Side Fitting Installation

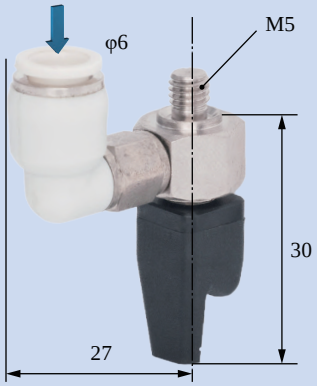

Rigid Connection Installation

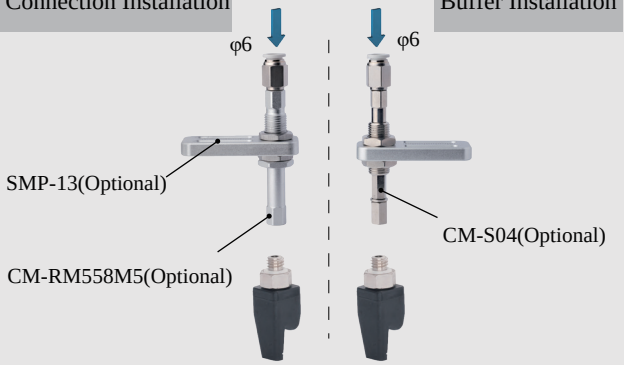

Buffer Installation

Matrix Installation

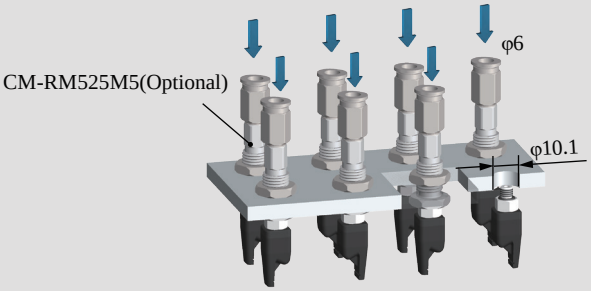

Precise Positioning Installation

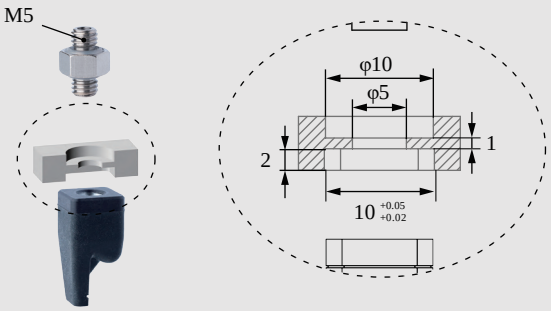

Installation of Optical Fiber Sensors

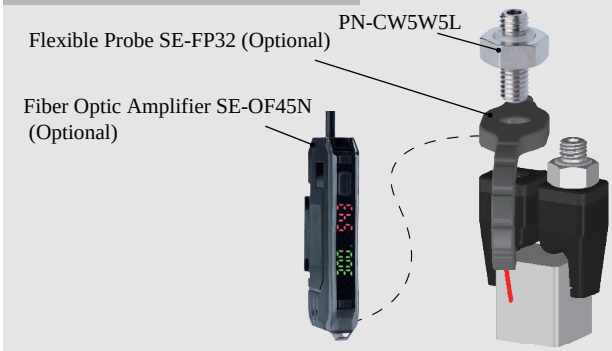

B-1G071010[P]/S

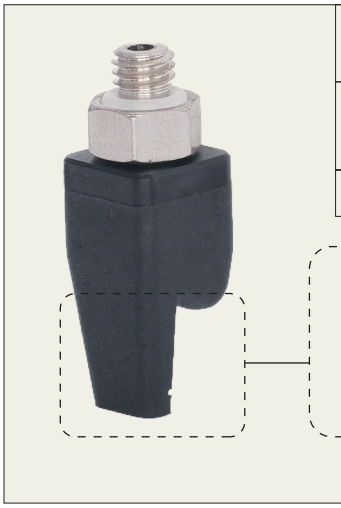

DAC-1G071010[LP]/S Direct-through Anti-static P Type	
DAC-1G071010[LPAS]/S Direct-through Anti-static P Type	
Weight	4g



DAL-1G071010[LP]/S Side-through Anti-static P Type	
DAL-1G071010[LPAS]/S Side-through Anti-static Dust-free P Type	
Weight	15.5g



Product features

- The single-finger beak can be modularly combined. Fingertip opens under pressure and clamps in a vacuum. It is recommended to be used with Rochu control unit.
- Anti-static material meets the national standard GB/T11210-2014, point-to-point resistance 0.1-1000MΩ requirements. When the workpiece is light, or very soft, easy to adhere to adsorp on the soft beak, anti-static dust-free traceless material [LPAS] is preferred

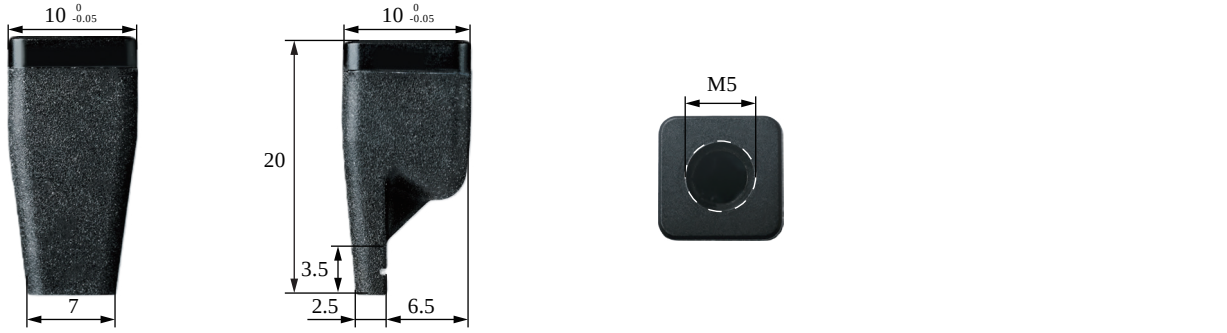

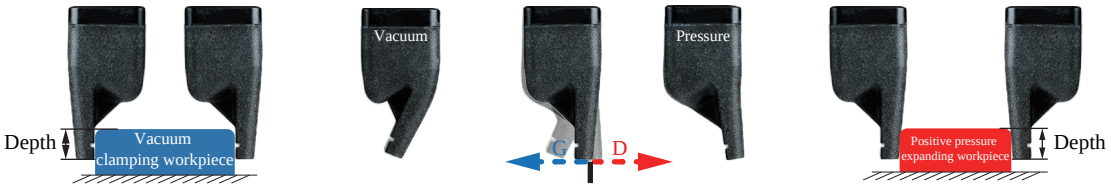

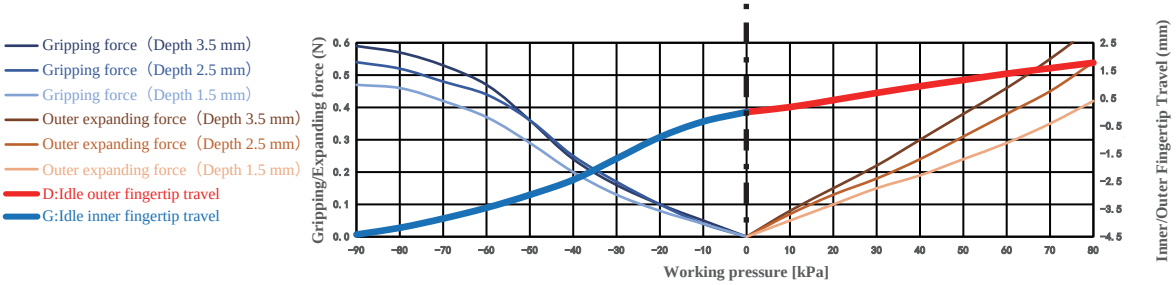

Paremeter

Gripping range	—	Gripping force	0-0.6N	Theoretical gripping load**	0-15g	Ideal gripping workpiece size*	—
Internal gripping range	—	Internal gripping force	0-0.7N	Theoretical internal gripping load**	0-16g	Ideal internal gripping workpiece size*	—
Joint size	M5	Life time***	1.5 million times	Contact Temperature	<220°C	Safe pressure***	<80kPa

*: The width of the cuboid that generates the maximum gripping force (two-finger gripping), the outer diameter of the cylinder (multi-finger gripping), the width of the square hole (two-finger internal gripping), or the inner diameter of the circular hole (multi-finger internal gripping);
**: Only the theoretical load of the ideal workpiece under standard working conditions is marked for reference and comparison. The real load capacity is also affected by factors such as the surface structure and roughness of the workpiece. Please take the measured data as the standard;
***: The working air pressure and the surface roughness of the workpiece in the usage scenario may have different degrees of impact on the life-time. Please configure Rochu control Unit. Do not exceed the safe air pressure.

DAC Straight Fitting Installation

Scan to watch videos



DAL Side Fitting Installation

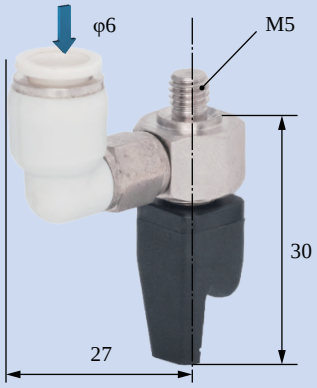

Rigid Connection Installation

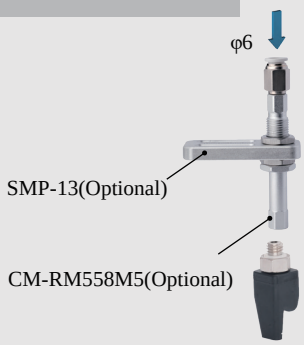

Buffer Installation



Matrix Installation

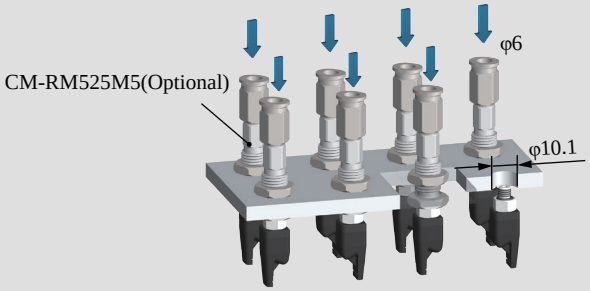

Precise Positioning Installation

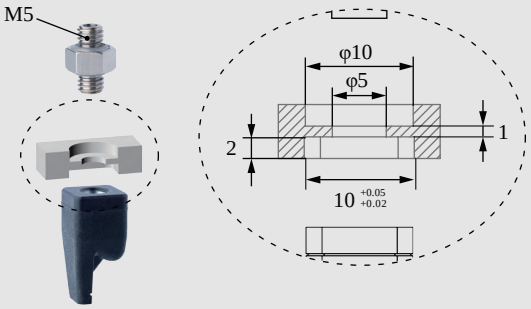

Installation of Optical Fiber Sensors



DAC-1G2018[H]/SN Direct-through H Type	DAS-1G2018[H]/SN Direct-through Precision Positioning H Type	DAM-1G2018[H]/SN Multi-way Precision Positioning H Type
DAC-1G2018[HAS]/SN Direct-through Dust-free H Type	DAS-1G2018[HAS]/SN Direct-through Precision Positioning Dust-free H Type	DAM-1G2018[HAS]/SN Multi-way Precision Positioning Dust-free H Type
		
Weight 6.9g	**Weight** 12.4g	**Weight** 16.3g

Product features

- Fingertips open under pressure state and clamp in a vacuum. Inner fingertips distance G can be adjusted by working pressure.It is suggested to be used with Rochu control unit.
- When soft grippers contact workpieces,especially those with dust-prevention needs,or miniature,lightweight and easily-adsorbable ones,choose dust-free material [HAS] preferentially.
- Food-grade material, direct food contact approved.

Scan to watch videos



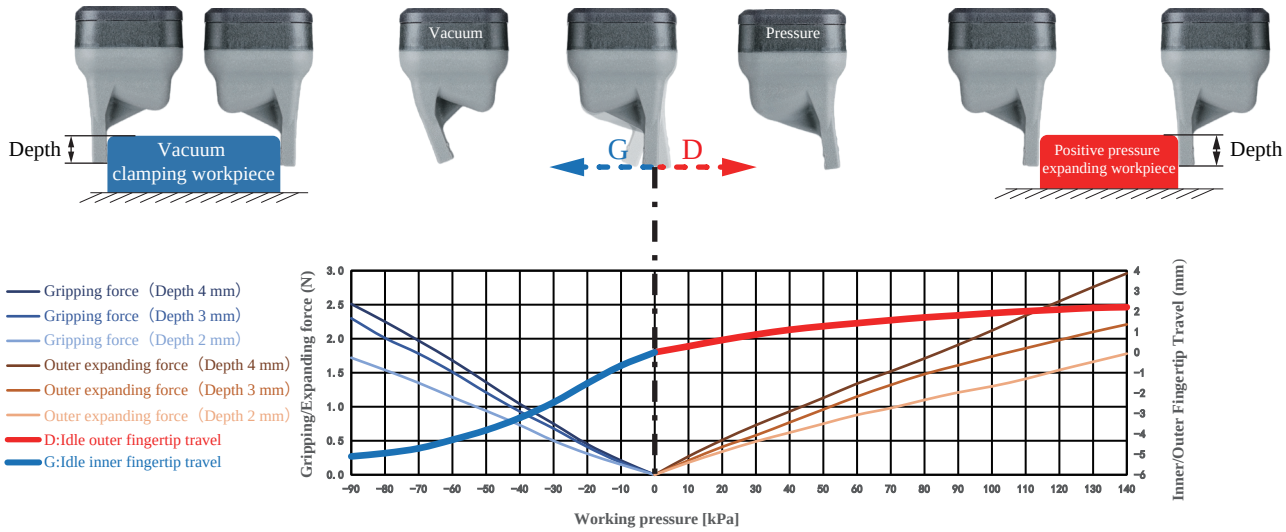

Paremeter

Gripping range	—	Gripping force	0-2.5N	Theoretical gripping load**	0-63g	Ideal gripping workpiece size*	—
Internal gripping range	—	Internal gripping force	0-3N	Theoretical internal gripping load**	0-74g	Ideal internal gripping workpiece size*	—
Joint size	M5	Life time***	1.5 million times	Contact Temperature	<220℃	Safe pressure***	<140kPa

*: The width of the cuboid that generates the maximum gripping force (two-finger gripping), the outer diameter of the cylinder (multi-finger gripping), the width of the square hole (two-finger internal gripping), or the inner diameter of the circular hole (multi-finger internal gripping);
**: Only the theoretical load of the ideal workpiece under standard working conditions is marked for reference and comparison. The real load capacity is also affected by factors such as the surface structure and roughness of the workpiece. Please take the measured data as the standard;
***: The working air pressure and the surface roughness of the workpiece in the usage scenario may have different degrees of impact on the life-time. Please configure Rochu control Unit. Do not exceed the safe air pressure.

DAC Module
(Direct-through)

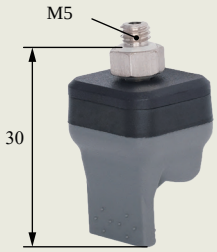

DAS Module
(Precise Positioning Direct-through)

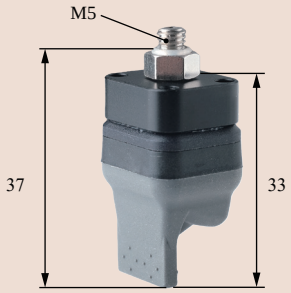

DAM Module
(Precise Positioning Multiple-through)

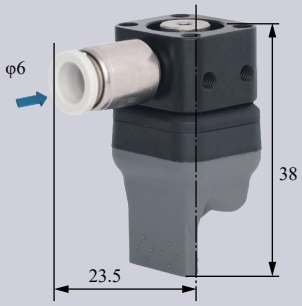

DAC Rigid Connection Installation

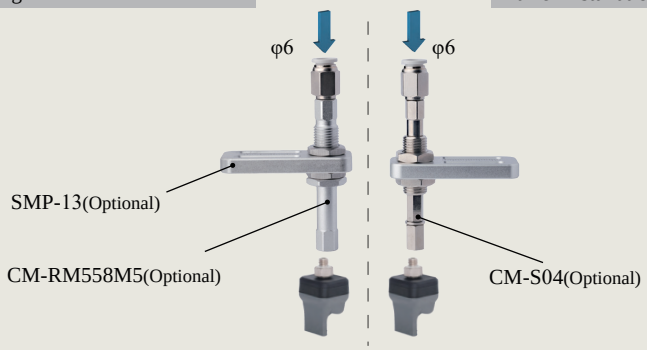

DAC Buffer Installation

DAS Detection

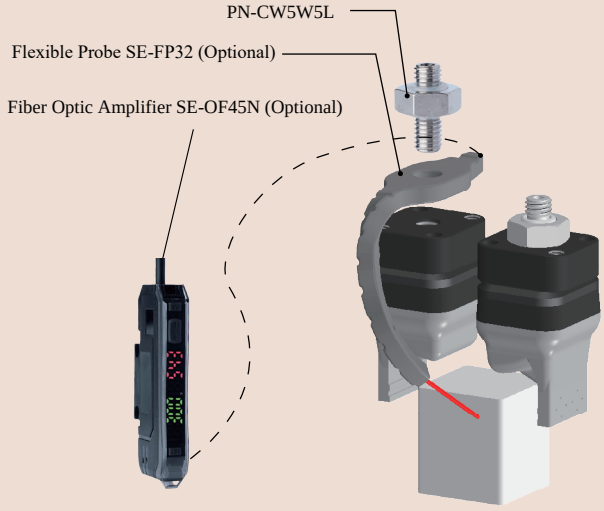

DAC Matrix Installation

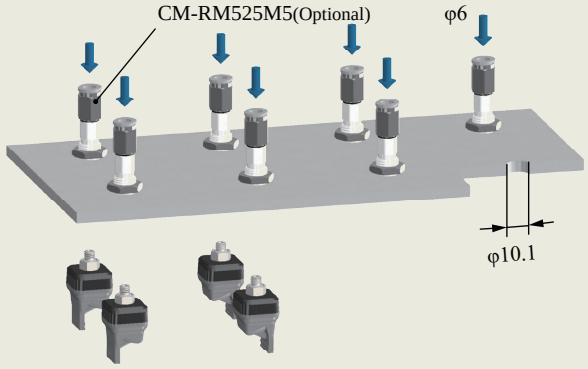

DAM Precise Positioning + Detection

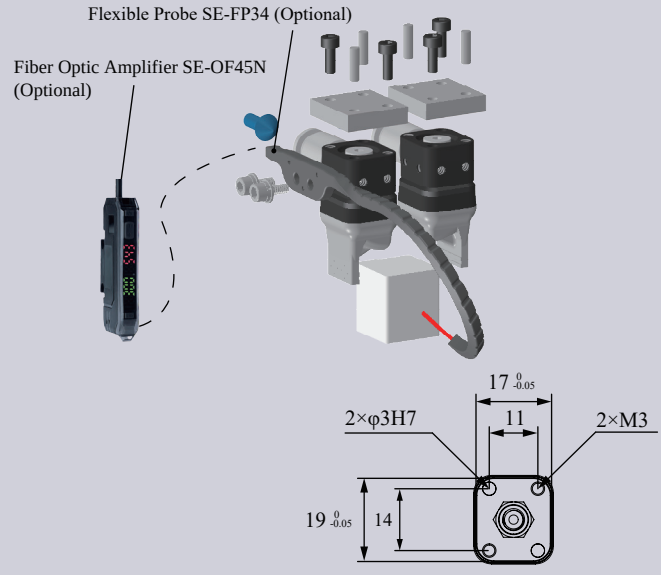

DAS Precise Positioning & Direct-through Installation

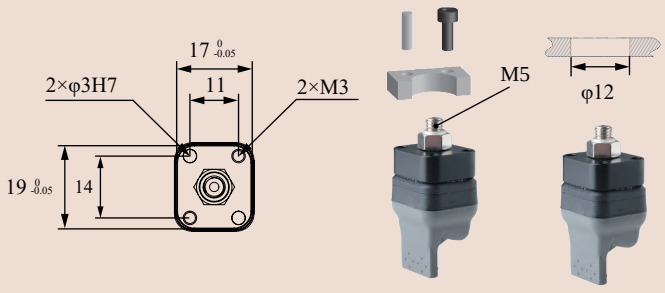

B-1G2018[H]/SN

DAC-1G2018[LH]/SN Direct-through Anti-static H Type	DAS-1G2018[LH]/SN Direct-through Anti-static Precision Positioning H Type	DAM-1G2018[LH]/SN Multi-way Anti-static Precision Positioning H Type
DAC-1G2018[LHAS]/SN Direct-through Anti-static Dust-free H Type	DAS-1G2018[LHAS]/SN Direct-through Anti-static Dust-free Precision Positioning H Type	DAM-1G2018[LHAS]/SN Side-through Anti-static Dust-free Precision Positioning H Type
		
Weight 6.9g	**Weight** 12.4g	**Weight** 16.3g

Product features

- Fingertips open under pressure state and clamp in a vacuum. Inner fingertips distance G can be adjusted by working pressure.It is suggested to be used with Rochu control unit.
- When soft grippers contact workpieces,especially those with dust-prevention needs,or miniature,lightweight and easily-adsorbable ones,choose dust-free material [LHAS] preferentially.

Scan to watch videos

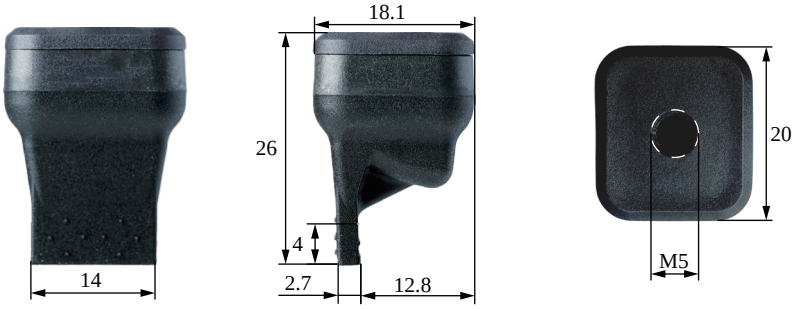

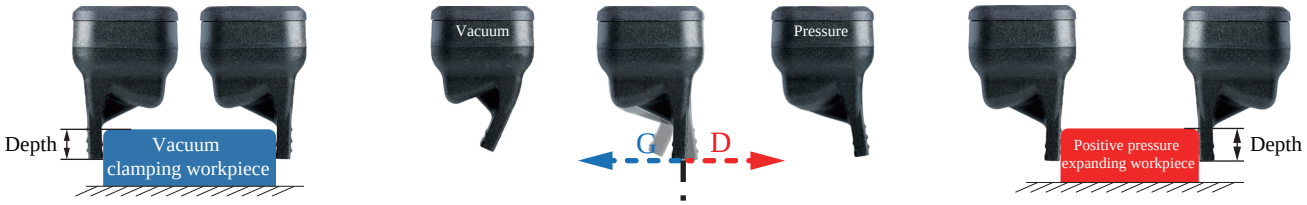

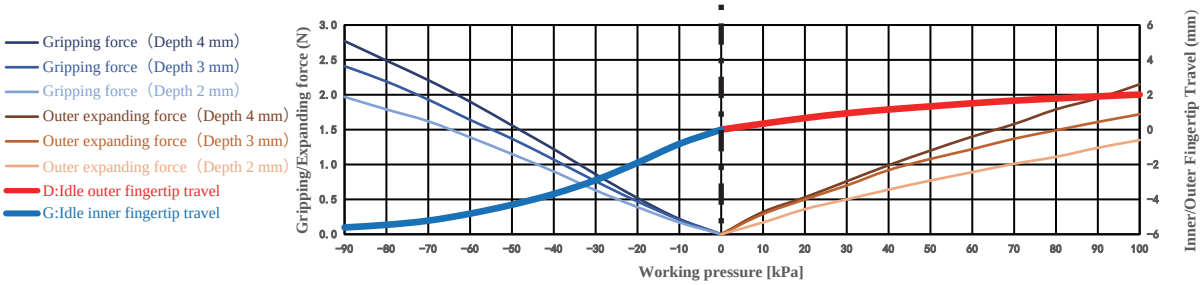

Paremeter

Gripping range	—	Gripping force	0-2.8N	Theoretical gripping load**	0-69g	Ideal gripping workpiece size*	—
Internal gripping range	—	Internal gripping force	0-2.2N	Theoretical internal gripping load**	0-54g	Ideal internal gripping workpiece size*	—
Joint size	M5	Life time***	1.5 million times	Contact Temperature	<220°C	Safe pressure***	<100kPa

*: The width of the cuboid that generates the maximum gripping force (two-finger gripping), the outer diameter of the cylinder (multi-finger gripping), the width of the square hole (two-finger internal gripping), or the inner diameter of the circular hole (multi-finger internal gripping);
**: Only the theoretical load of the ideal workpiece under standard working conditions is marked for reference and comparison. The real load capacity is also affected by factors such as the surface structure and roughness of the workpiece. Please take the measured data as the standard;
***: The working air pressure and the surface roughness of the workpiece in the usage scenario may have different degrees of impact on the life-time. Please configure Rochu control Unit. Do not exceed the safe air pressure.

DAC Module
(Direct-through)

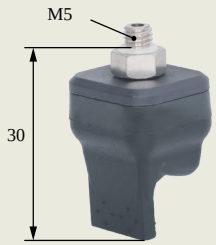

DAS Module
(Precise Positioning Direct-through)

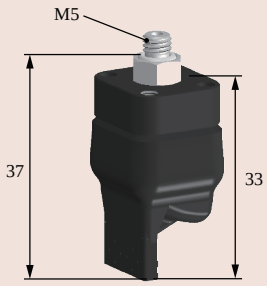

DAM Module
(Precise Positioning Multiple-through)

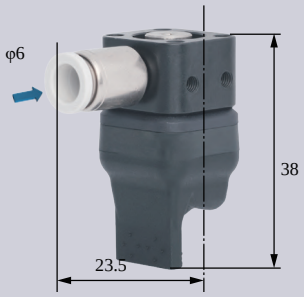

DAC Rigid Connection Installation

DAC Buffer Installation

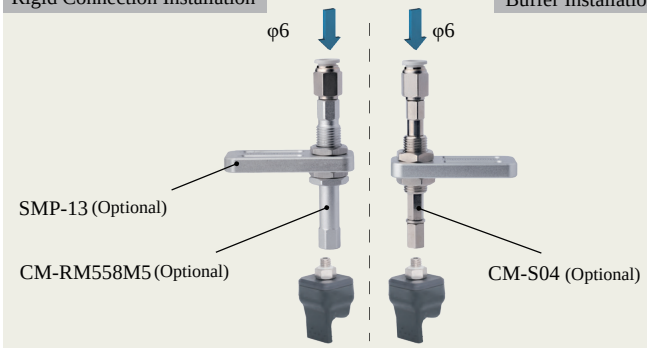

DAS Detection

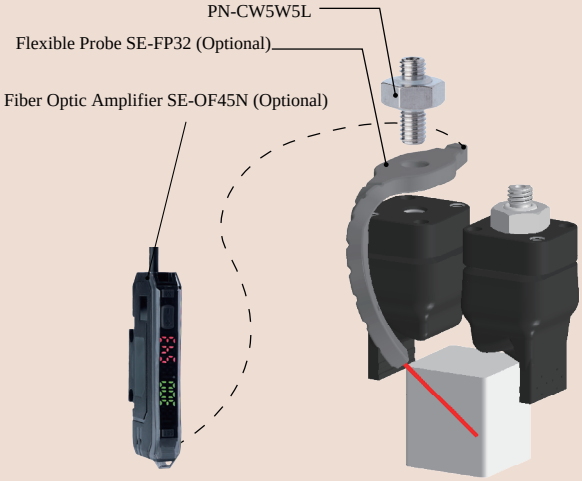

DAC Matrix Installation

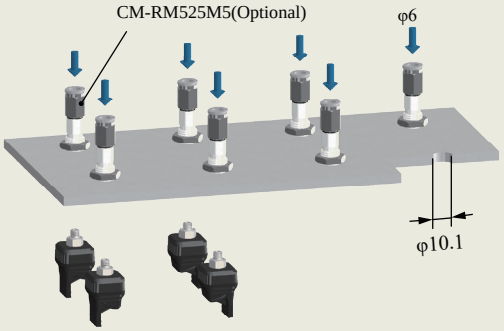

DAM Precise Positioning + Detection

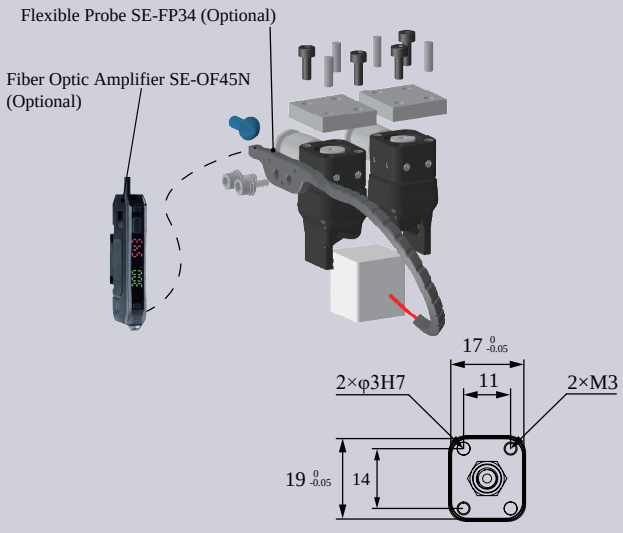

DAS Precise Positioning & Direct-through Installation

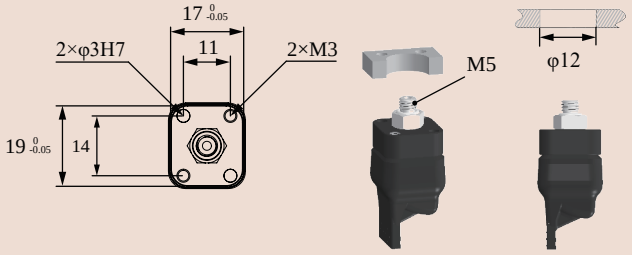

B-1G2018[LH]/SN

DAC-1GN2018[H]/SN Direct-through H Type	DAS-1GN2018[H]/SN Direct-through Precision Positioning H Type	DAM- 1GN2018[H]/SN Multi-way Precision Positioning H Type
DAC-1GN2018[HAS]/SN Direct-through Dust-free H Type	DAS-1GN2018[HAS]/SN Direct-through Precision Positioning Dust-free H Type	DAM-1GN2018[HAS]/SN Multi-way Precision Positioning Dust-free H Type
		
Weight 7.3g	**Weight** 12.8g	**Weight** 16.7g

Product features

- Suitable for complex-shaped workpieces. Profiling nails, designed to fit the workpiece's shape, are installed via soft grippers' fingertip screw holes. They can be made of rigid materials like plastic or metal, depending on the workpiece.
- Fingertips open under pressure state and clamp in a vacuum. Inner fingertips distance G can be adjusted by working pressure.It is suggested to be used with Rochu control unit.
- When soft grippers contact workpieces,especially those with dust-prevention needs,or miniature,lightweight and easily-ad-sorbable ones,choose dust-free material [HAS] preferentially.

Scan to watch videos

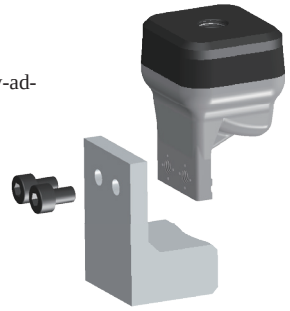

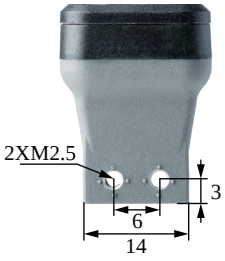

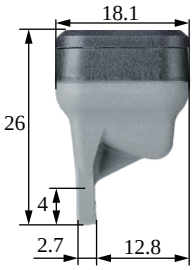

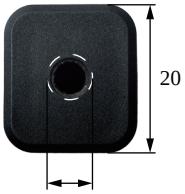



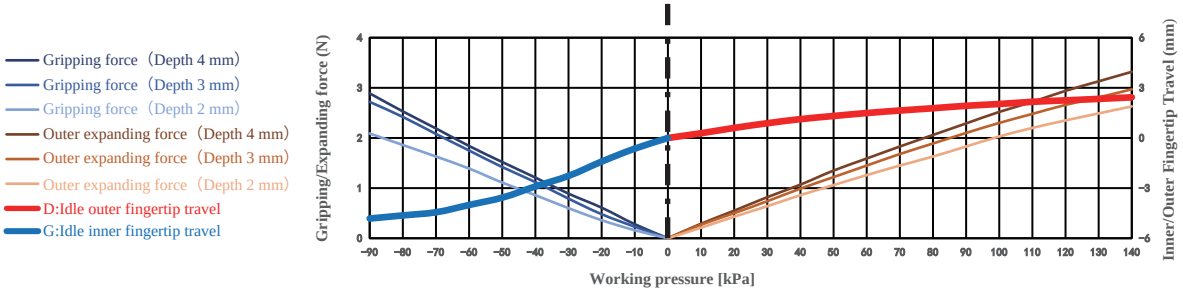

Paremeter

Gripping range	—	Gripping force	0-2.9N	Theoretical gripping load**	0-72g	Ideal gripping workpiece size*	—
Internal gripping range	—	Internal gripping force	0-3.3N	Theoretical internal gripping load**	0-83g	Ideal internal gripping workpiece size*	—
Joint size	M5	Life time***	1.5 million times	Contact Temperature	<220°C	Safe pressure***	<140kPa

*: The width of the cuboid that generates the maximum gripping force (two-finger gripping), the outer diameter of the cylinder (multi-finger gripping), the width of the square hole (two-finger internal gripping), or the inner diameter of the circular hole (multi-finger internal gripping);
**: Only the theoretical load of the ideal workpiece under standard working conditions is marked for reference and comparison. The real load capacity is also affected by factors such as the surface structure and roughness of the workpiece. Please take the measured data as the standard;
***: The working air pressure and the surface roughness of the workpiece in the usage scenario may have different degrees of impact on the life-time. Please configure Rochu control Unit. Do not exceed the safe air pressure.

DAC Module
(Direct-through)

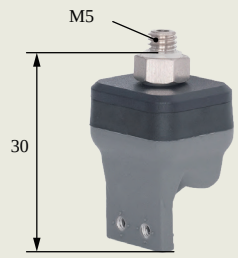

DAS Module
(Precise Positioning Direct-through)

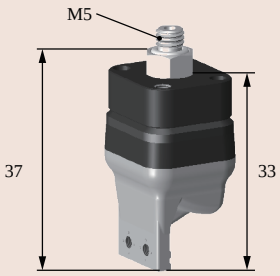

DAM Module
(Precise Positioning Multiple-through)

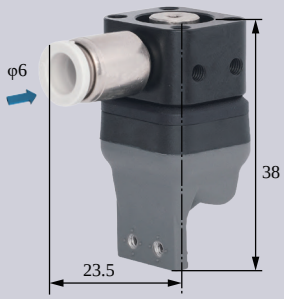

DAC Rigid Connection Installation

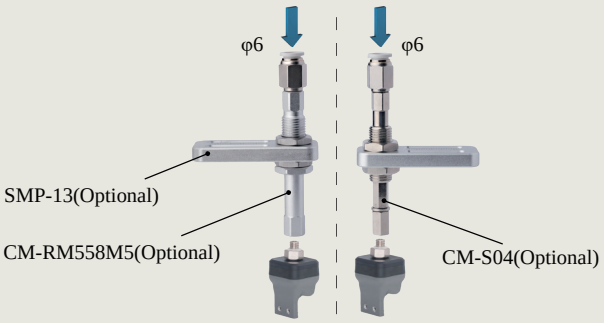

DAC Buffer Installation

DAS Detection + Profile Block Installation

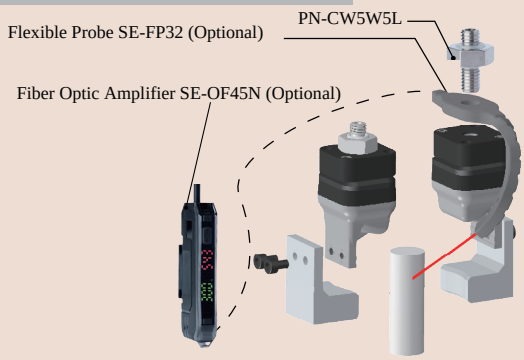

DAC Matrix Installation

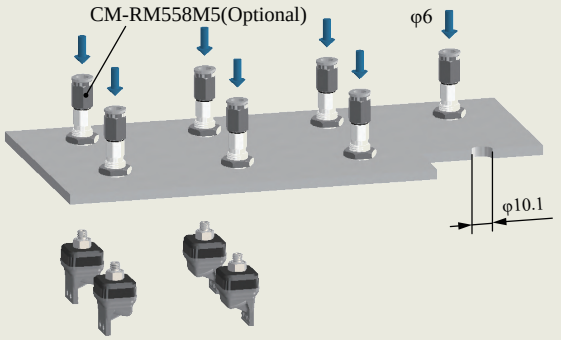

DAS Precise Positioning & Direct-through Installation

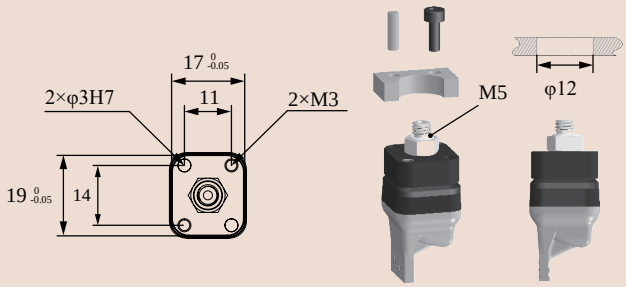

DAM Precise Positioning + Detection + Profile Block Installation

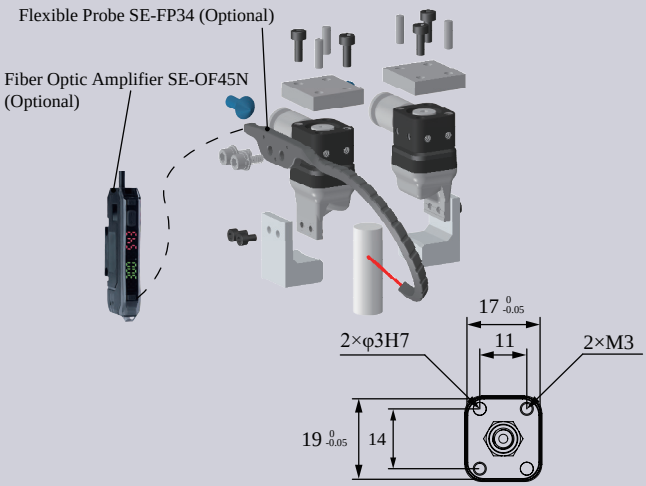

DAC-1G2521[H]/SN Direct-through H Type	DAS-1G2521[H]/SN Direct-through Precision Positioning H Type	DAM-1G2521[H]/SN Multi-way Precision Positioning H Type
DAC-1G2521[HAS]/SN Direct-through Dust-free H Type	DAS-1G2521[HAS]/SN Direct-through Precision Positioning Dust-free H Type	DAM-1G2521[HAS]/SN Multi-way Precision Positioning Dust-free H Type
		
Weight 15.7g	**Weight** 22.9g	**Weight** 27.1g

Product features

- Fingertips open under pressure state and clamp in a vacuum. Inner fingertips distance G can be adjusted by working pressure.It is suggested to be used with Rochu control unit.
- When soft grippers contact workpieces,especially those with dust-prevention needs,or miniature,lightweight and easily-adsorbable ones,choose dust-free material [HAS] preferentially.
- Food-grade material, direct food contact approved.

Scan to watch videos



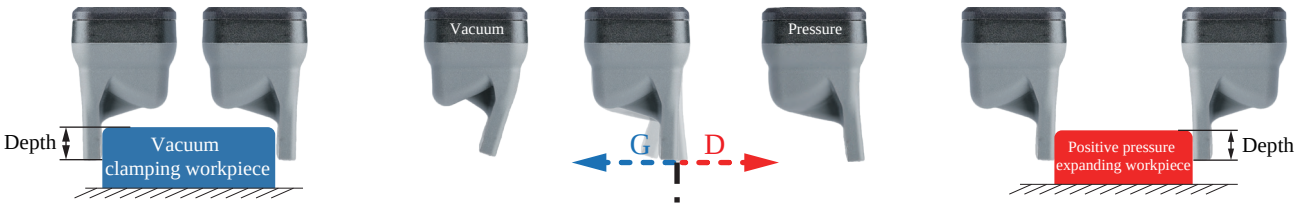

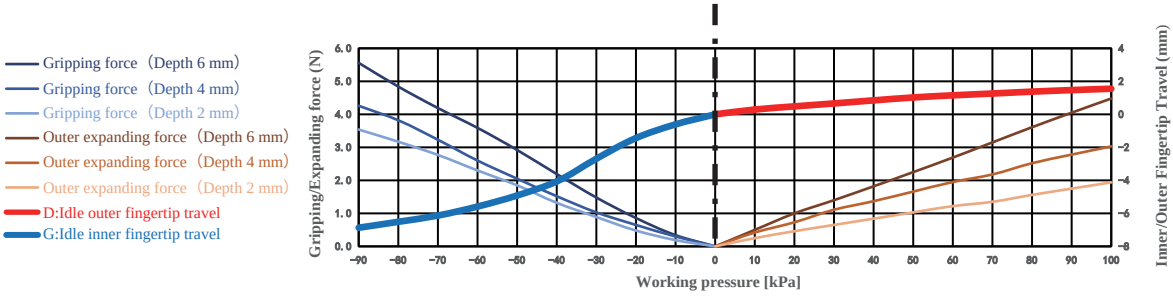

Paremeter

Gripping range	—	Gripping force	0-5.6N	Theoretical gripping load**	0-139g	Ideal gripping workpiece size*	—
Internal gripping range	—	Internal gripping force	0-4.5N	Theoretical internal gripping load**	0-112g	Ideal internal gripping workpiece size*	—
Joint size	G1/8	Life time***	1.5 million times	Contact Temperature	<220°C	Safe pressure***	<100kPa

*: The width of the cuboid that generates the maximum gripping force (two-finger gripping), the outer diameter of the cylinder (multi-finger gripping), the width of the square hole (two-finger internal gripping), or the inner diameter of the circular hole (multi-finger internal gripping);
**: Only the theoretical load of the ideal workpiece under standard working conditions is marked for reference and comparison. The real load capacity is also affected by factors such as the surface structure and roughness of the workpiece. Please take the measured data as the standard;
***: The working air pressure and the surface roughness of the workpiece in the usage scenario may have different degrees of impact on the life-time. Please configure Rochu control Unit. Do not exceed the safe air pressure.

DAC Module
(Direct-through)

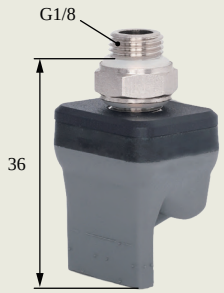

DAS Module
(Precise Positioning Direct-through)

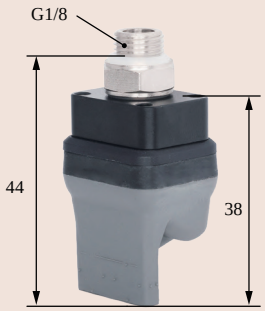

DAM Module
(Precise Positioning Multiple-through)

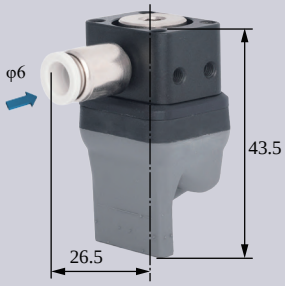

DAC Rigid Connection Installation

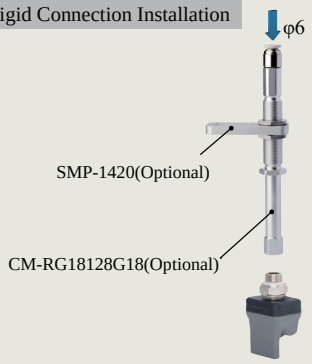

DAC Buffer Installation

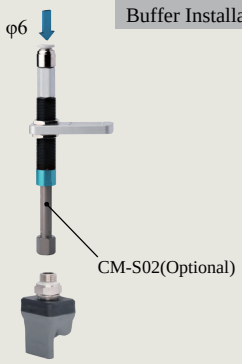

DAS Detection

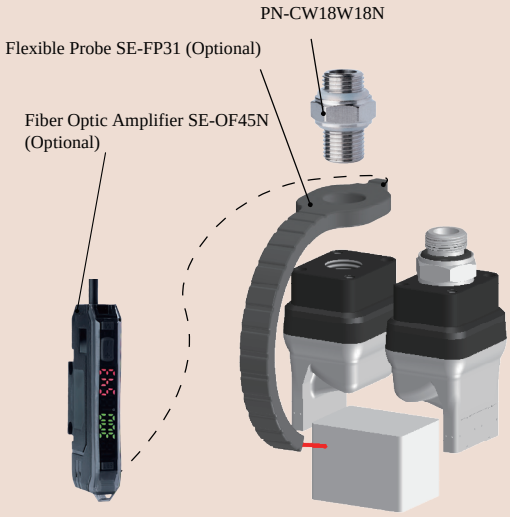

DAC Matrix Installation

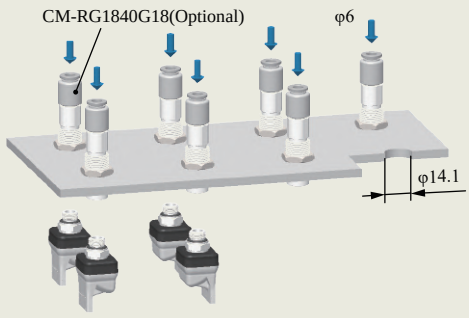

DAM Precise Positioning + Detection

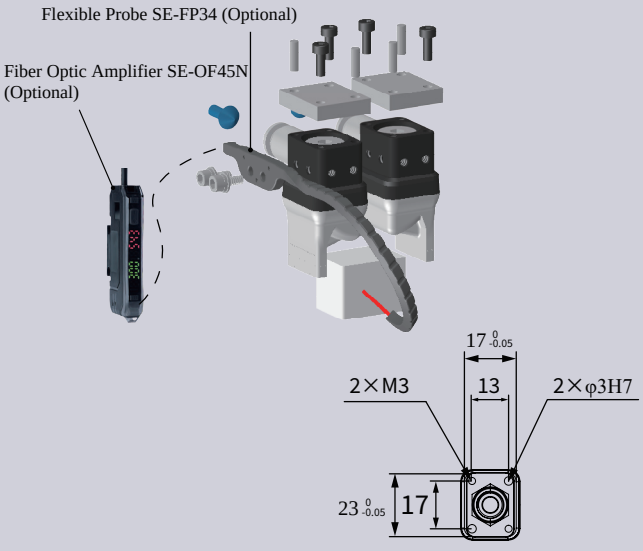

DAS Precise Positioning & Direct-through Installation

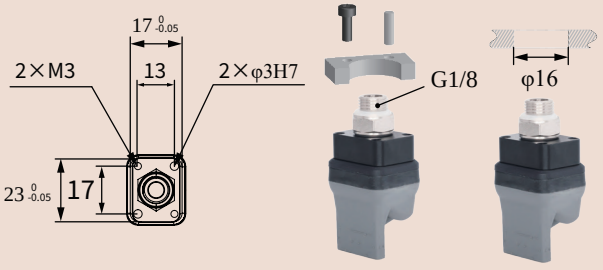

DAC-1GN2521[H]/SN Direct-through H Type	DAS-1GN2521[H]/SN Direct-through Precision Positioning H Type	DAM-1GN2521[H]/SN Multi-way Precision Positioning H Type
DAC-1GN2521[HAS]/SN Direct-through Dust-free H Type	DAS-1GN2521[HAS]/SN Direct-through Precision Positioning Dust-free H Type	DAM-1GN2521[HAS]/SN Multi-way Precision Positioning Dust-free H Type
		
Weight 17.8g	**Weight** 25g	**Weight** 29.2g

Scan to watch videos

Product features

- Suitable for complex-shaped workpieces. Profiling nails, designed to fit the workpiece's shape, are installed via soft grippers' fingertip screw holes. They can be made of rigid materials like plastic or metal, depending on the workpiece.
- Fingertips open under pressure state and clamp in a vacuum. Inner fingertips distance G can be adjusted by working pressure.It is suggested to be used with Rochu control unit.
- When soft grippers contact workpieces,especially those with dust-prevention needs,or miniature,lightweight and easily-adsorbable ones,choose dust-free material [HAS] preferentially.





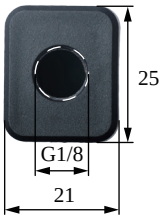



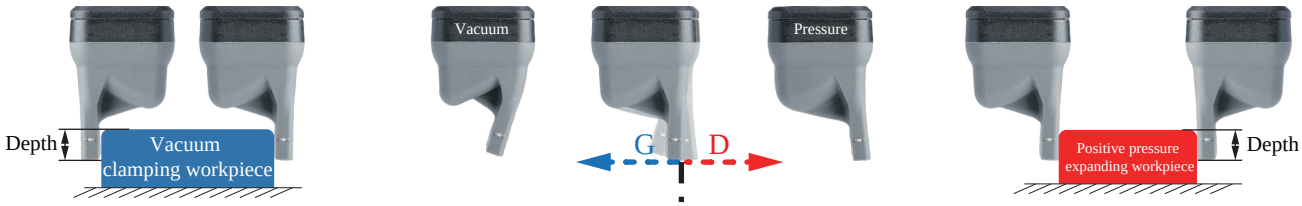

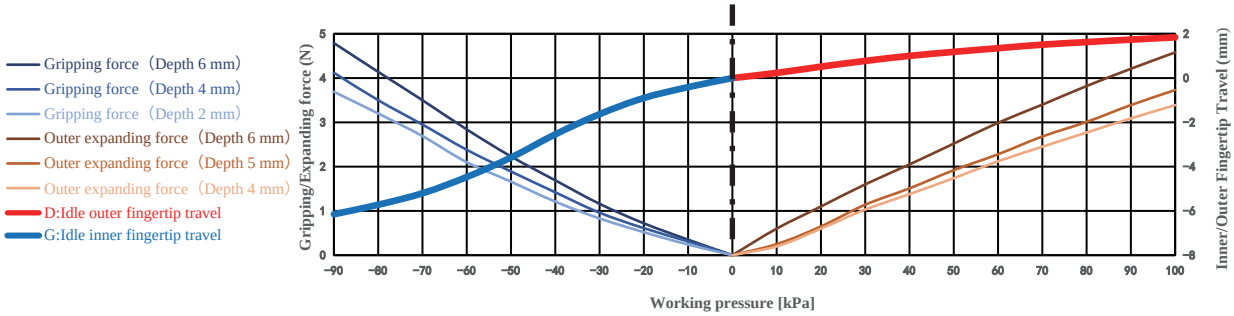

Paremeter

Gripping range	—	Gripping force	0-4.8N	Theoretical gripping load**	0-120g	Ideal gripping workpiece size*	—
Internal gripping range	—	Internal gripping force	0-4.6N	Theoretical internal gripping load**	0-115g	Ideal internal gripping workpiece size*	—
Joint size	G1/8	Life time***	1.5 million times	Contact Temperature	<220℃	Safe pressure***	<100kPa

*: The width of the cuboid that generates the maximum gripping force (two-finger gripping), the outer diameter of the cylinder (multi-finger gripping), the width of the square hole (two-finger internal gripping), or the inner diameter of the circular hole (multi-finger internal gripping);
**: Only the theoretical load of the ideal workpiece under standard working conditions is marked for reference and comparison. The real load capacity is also affected by factors such as the surface structure and roughness of the workpiece. Please take the measured data as the standard;
***: The working air pressure and the surface roughness of the workpiece in the usage scenario may have different degrees of impact on the life-time. Please configure Rochu control Unit. Do not exceed the safe air pressure.

DAC Module
(Direct-through)



DAS Module
(Precise Positioning Direct-through)

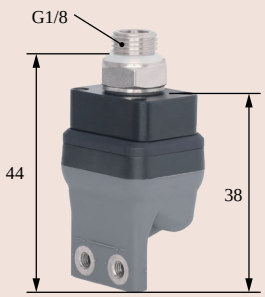

DAM Module
(Precise Positioning Multiple-through)

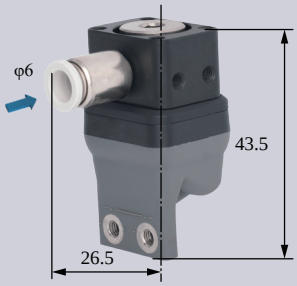

DAC Rigid Connection Installation

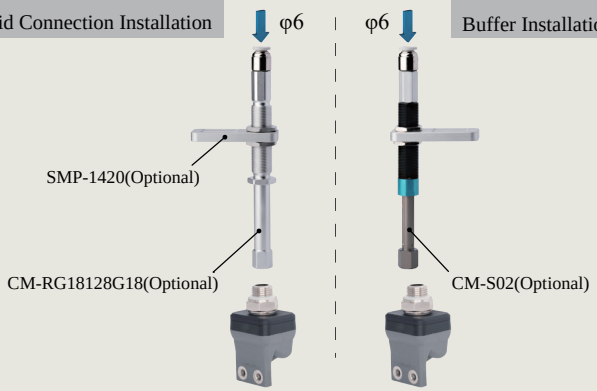

DAC Buffer Installation

DAS Detection + Profile Block Installation

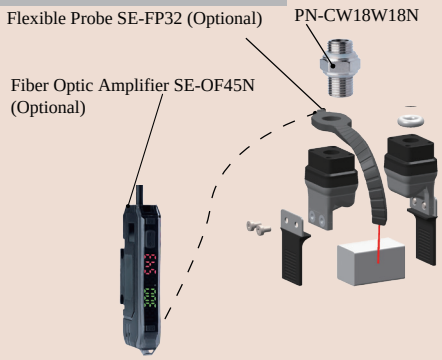

DAC Matrix Installation

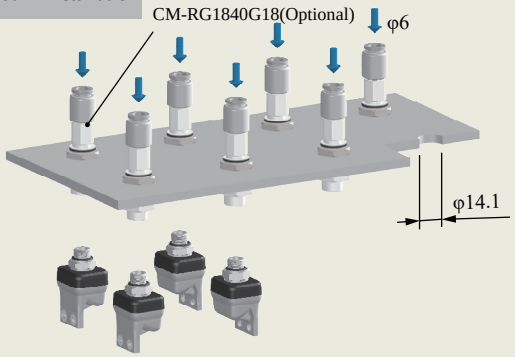

DAS Precise Positioning & Direct-through Installation

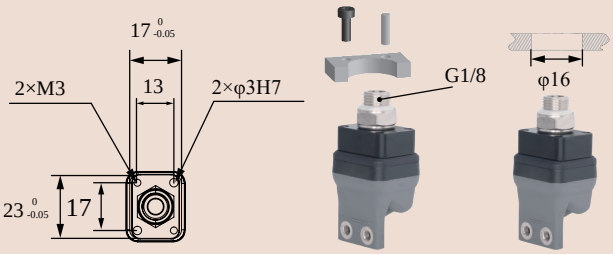

DAM Precise Positioning + Detection + Profile Block Installation

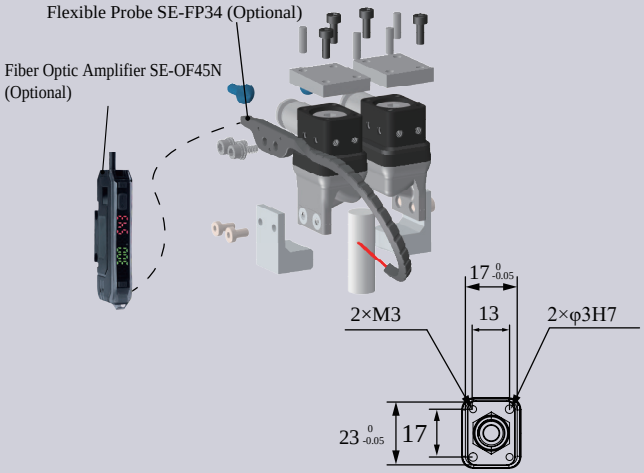

DAC-1G3024[H]/SN Direct-through H Type	DAS-1G3024[H]/SN Direct-through Precision Positioning H Type	DAM-1G3024[H]/SN Multi-way Precision Positioning H Type
DAC-1G3024[HAS]/SN Direct-through Dust-free H Type	DAS-1G3024[HAS]/SN Direct-through Precision Positioning Dust-free H Type	DAM-1G3024[HAS]/SN Multi-way Precision Positioning Dust-free H Type
		
Weight 17.3g	**Weight** 24.5g	**Weight** 28.7g

Product features

- Fingertips open under pressure state and clamp in a vacuum. Inner fingertips distance G can be adjusted by working pressure.It is suggested to be used with Rochu control unit.
- When soft grippers contact workpieces,especially those with dust-prevention needs,or miniature,lightweight and easily-adsorbable ones,choose dust-free material [HAS] preferentially.
- Food-grade material, direct food contact approved.

Scan to watch videos



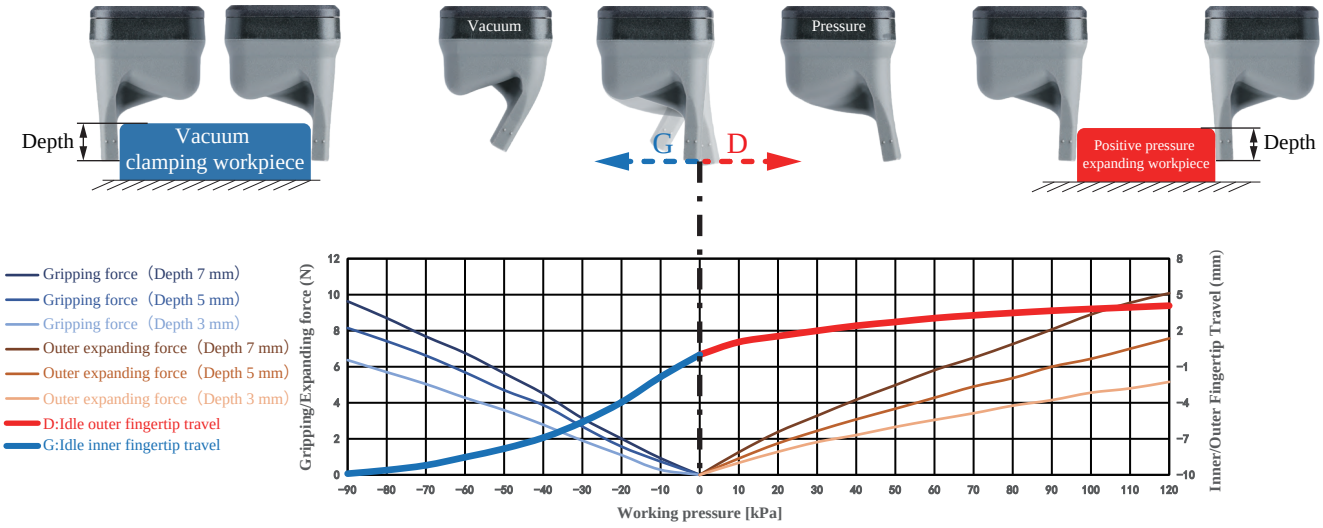

Paremeter

Gripping range	—	Gripping force	0-9.6N	Theoretical gripping load**	0-241g	Ideal gripping workpiece size*	—
Internal gripping range	—	Internal gripping force	0-10.8N	Theoretical internal gripping load**	0-270g	Ideal internal gripping workpiece size*	—
Joint size	G1/8	Life time***	1.5 million times	Contact Temperature	<220℃	Safe pressure***	<120kPa

*: The width of the cuboid that generates the maximum gripping force (two-finger gripping), the outer diameter of the cylinder (multi-finger gripping), the width of the square hole (two-finger internal gripping), or the inner diameter of the circular hole (multi-finger internal gripping);
**: Only the theoretical load of the ideal workpiece under standard working conditions is marked for reference and comparison. The real load capacity is also affected by factors such as the surface structure and roughness of the workpiece. Please take the measured data as the standard;
***: The working air pressure and the surface roughness of the workpiece in the usage scenario may have different degrees of impact on the life-time. Please configure Rochu control Unit. Do not exceed the safe air pressure.

DAC Module
(Direct-through)

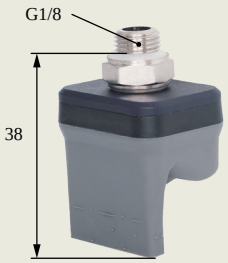

DAS Module
(Precise Positioning Direct-through)

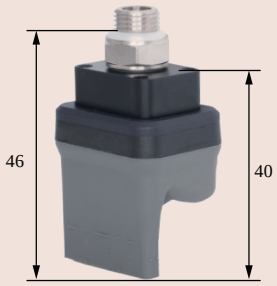

DAM Module
(Precise Positioning Multiple-through)

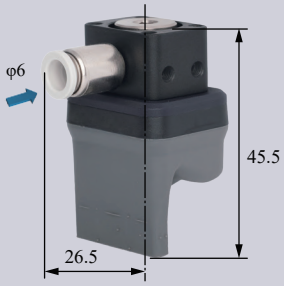

DAC Rigid Connection Installation

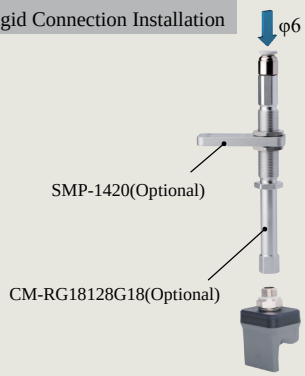

DAC Buffer Installation



DAS Detection

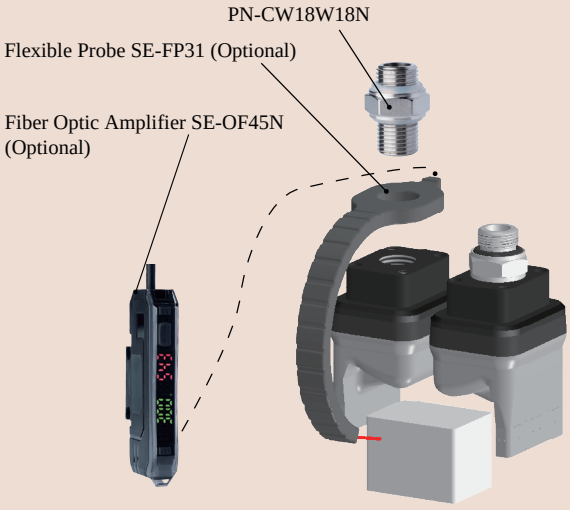

DAC Matrix Installation

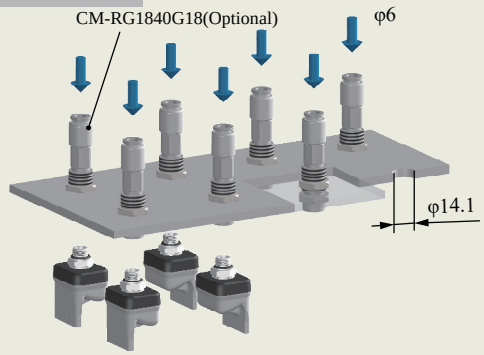

DAM Precise Positioning + Detection

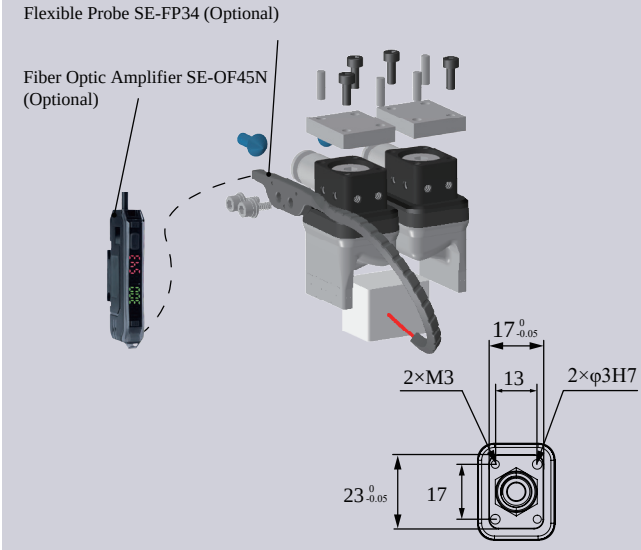

DAS Precise Positioning & Direct-through Installation

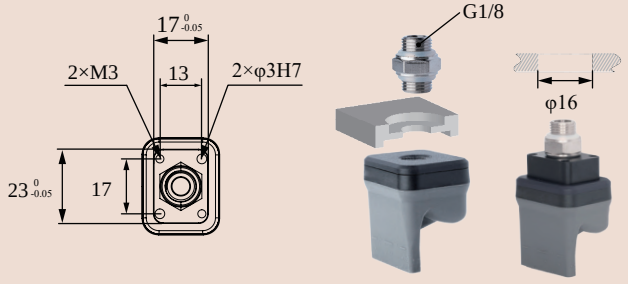

DAC - 1G3024[LH]/SN Direct-through Anti-static H Type	DAS- 1G3024[LH]/SN Direct-through Anti-static Precision Positioning H Type	DAM- 1G3024[LH]/SN Multi-way Anti-static Precision Positioning H Type
DAC - 1G3024[LHAS]/SN Direct-through Anti-static Dust-free H Type	DAS- 1G3024[LHAS]/SN Direct-through Anti-static Dust-free Precision Positioning H Type	DAM- 1G3024[LHAS]/SN Side-through Anti-static Dust-free Precision Positioning H Type
		
Weight 17.3g	**Weight** 24.5g	**Weight** 28.7g

Product features

- Fingertips open under pressure state and clamp in a vacuum. Inner fingertips distance G can be adjusted by working pressure.It is suggested to be used with Rochu control unit.
- When soft grippers contact workpieces,especially those with dust-prevention needs,or miniature,lightweight and easily-adsorbable ones,choose dust-free material [HAS] preferentially.

Scan to watch videos



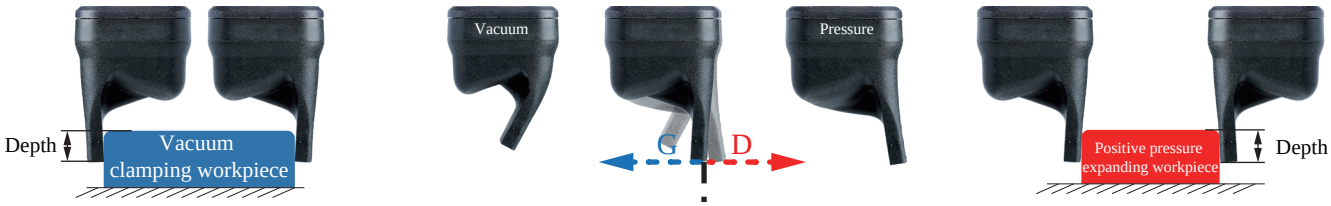

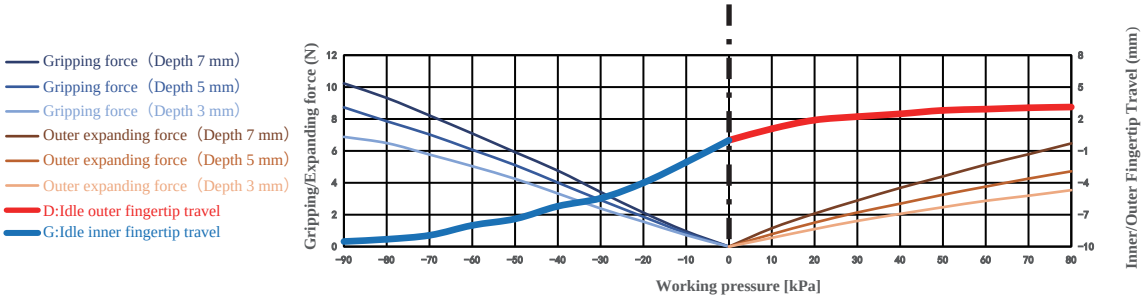

Paremeter

Gripping range	—	Gripping force	0-10.2N	Theoretical gripping load**	0-256g	Ideal gripping workpiece size*	—
Internal gripping range	—	Internal gripping force	0-6.5N	Theoretical internal gripping load**	0-162g	Ideal internal gripping workpiece size*	—
Joint size	G1/8	Life time***	1.5 million times	Contact Temperature	<220°C	Safe pressure***	<80kPa

*: The width of the cuboid that generates the maximum gripping force (two-finger gripping), the outer diameter of the cylinder (multi-finger gripping), the width of the square hole (two-finger internal gripping), or the inner diameter of the circular hole (multi-finger internal gripping);
**: Only the theoretical load of the ideal workpiece under standard working conditions is marked for reference and comparison. The real load capacity is also affected by factors such as the surface structure and roughness of the workpiece. Please take the measured data as the standard;
***: The working air pressure and the surface roughness of the workpiece in the usage scenario may have different degrees of impact on the life-time. Please configure Rochu control Unit. Do not exceed the safe air pressure.

DAC Module
(Direct-through)

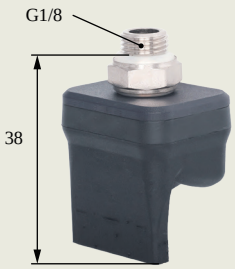

DAS Module
(Precise Positioning Direct-through)

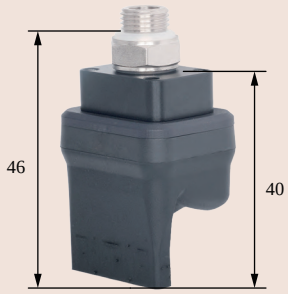

DAM Module
(Precise Positioning Multiple-through)

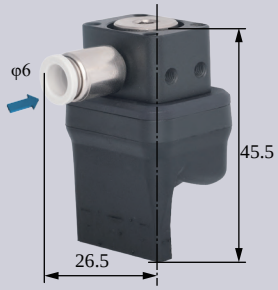

DAC Rigid Connection Installation

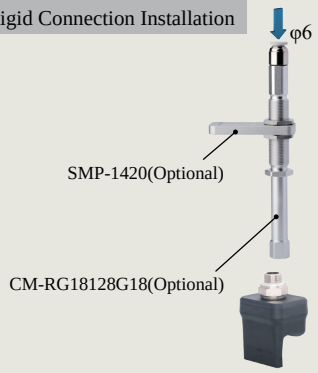

DAC Buffer Installation

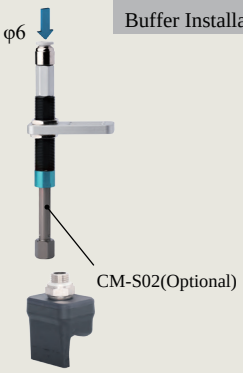

DAS Detection

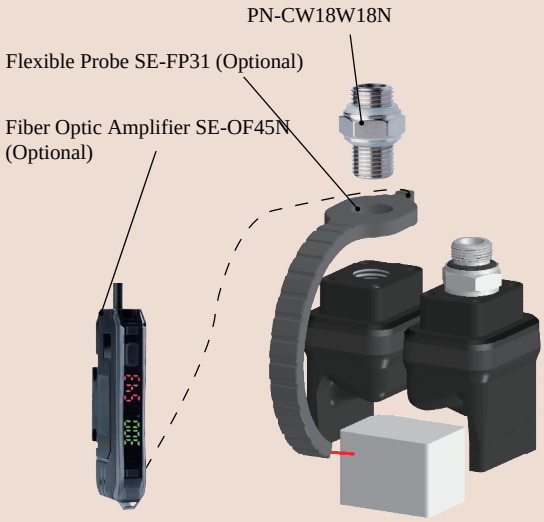

DAC Matrix Installation

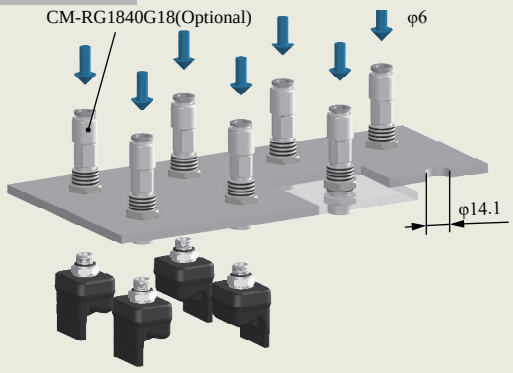

DAM Precise Positioning + Detection

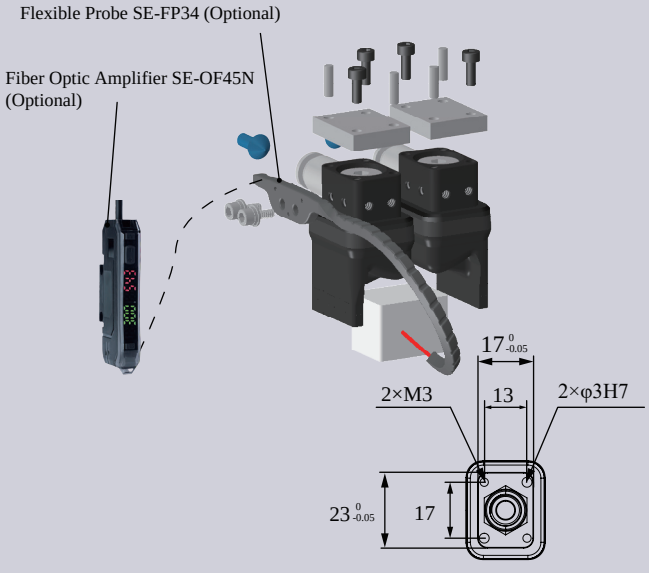

DAS Precise Positioning & Direct-through Installation

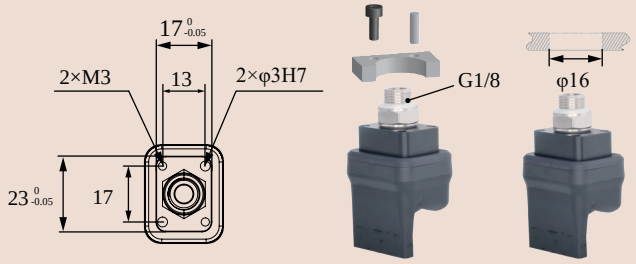

B-1G3024[LH]/SN

DAC-1GN3024[H]/SN Direct-through H Type	DAS-1GN3024[H]/SN Direct-through Precision Positioning H Type	DAM-1GN3024[H]/SN Multi-way Precision Positioning H Type
DAC-1GN3024[HAS]/SN Direct-through Dust-free H Type	DAS-1GN3024[HAS]/SN Direct-through Precision Positioning Dust-free H Type	DAM-1GN3024[HAS]/SN Multi-way Precision Positioning Dust-free H Type
		
Weight 18g	Weight 25.2g	Weight 29.4g

Scan to watch videos

Product features

- Suitable for complex-shaped workpieces. Profiling nails, designed to fit the workpiece's shape, are installed via soft grippers' fingertip screw holes. They can be made of rigid materials like plastic or metal, depending on the workpiece.
- Fingertips open under pressure state and clamp in a vacuum. Inner fingertips distance G can be adjusted by working pressure.It is suggested to be used with Rochu control unit.
- When soft grippers contact workpieces,especially those with dust-prevention needs,or miniature,lightweight and easily-adsorbable ones,choose dust-free material [HAS] preferentially.





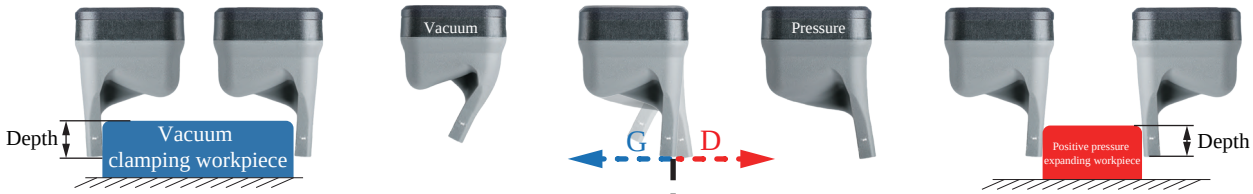

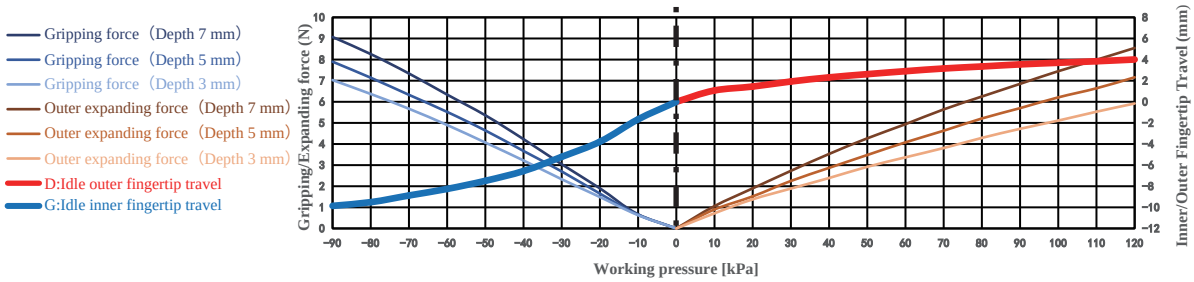

Paremeter

Gripping range	—	Gripping force	0-9.1N	Theoretical gripping load**	0-227g	Ideal gripping workpiece size*	—
Internal gripping range	—	Internal gripping force	0-8.6N	Theoretical internal gripping load**	0-214g	Ideal internal gripping workpiece size*	—
Joint size	G1/8	Life time***	1.5 million times	Contact Temperature	<220°C	Safe pressure***	<120kPa

*: The width of the cuboid that generates the maximum gripping force (two-finger gripping), the outer diameter of the cylinder (multi-finger gripping), the width of the square hole (two-finger internal gripping), or the inner diameter of the circular hole (multi-finger internal gripping);
**: Only the theoretical load of the ideal workpiece under standard working conditions is marked for reference and comparison. The real load capacity is also affected by factors such as the surface structure and roughness of the workpiece. Please take the measured data as the standard;
***: The working air pressure and the surface roughness of the workpiece in the usage scenario may have different degrees of impact on the life-time. Please configure Rochu control Unit. Do not exceed the safe air pressure.

DAC Module
(Direct-through)

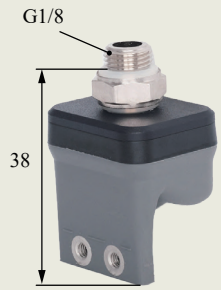

DAS Module
(Precise Positioning Direct-through)

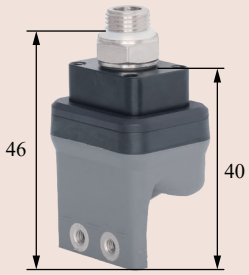

DAM Module
(Precise Positioning Multiple-through)

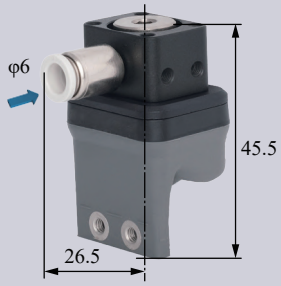

DAC Rigid Connection Installation

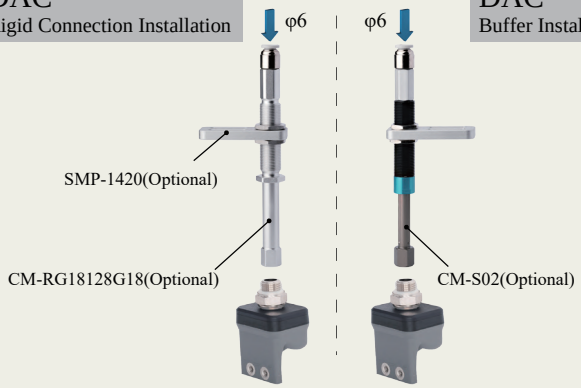

DAC Buffer Installation

DAC Inspection + Soft Wing Installation

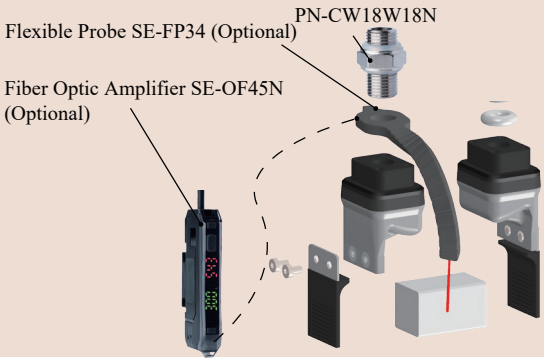

DAC Matrix Installation

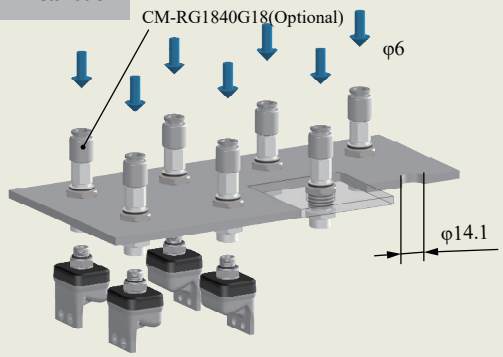

DAS Precise Positioning & Direct-through Installation

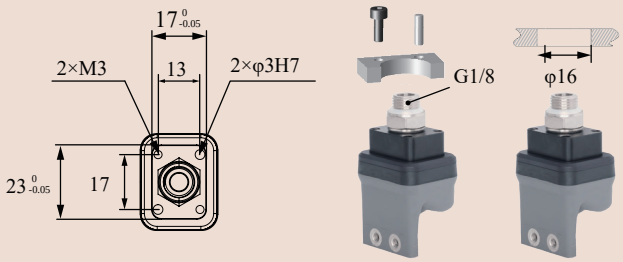

GPC Protective Installation



DAM Precise Positioning + Detection + Profile Block Installation

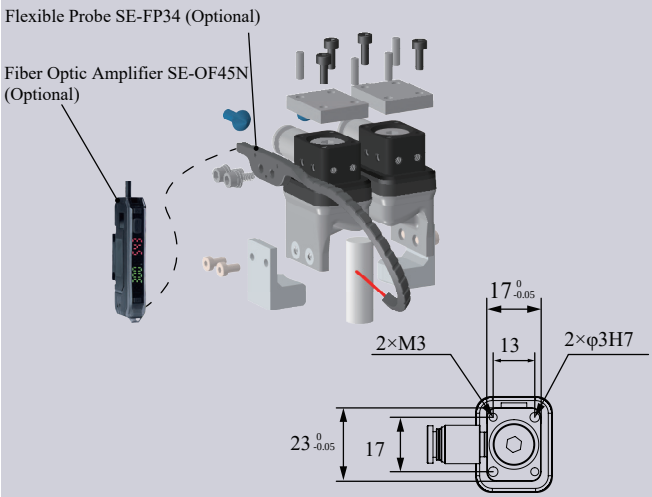

DAC-1G3527[H]/SN Direct-through H Type	DAS-1G3527[H]/SN Direct-through Precision Positioning H Type	DAM-1G3527[H]/SN Multi-way Precision Positioning H Type
DAC-1G3527[HAS]/SN Direct-through Dust-free H Type	DAS-1G3527[HAS]/SN Direct-through Precision Positioning Dust-free H Type	DAM-1G3527[HAS]/SN Multi-way Precision Positioning Dust-free H Type
		
Weight 21.8g	Weight 29.03g	Weight 33.18g

Product features

- Fingertips open under pressure state and clamp in a vacuum. Inner fingertips distance G can be adjusted by working pressure.It is suggested to be used with Rochu control unit.
- When soft grippers contact workpieces,especially those with dust-prevention needs,or miniature,lightweight and easily-ad-sorbable ones,choose dust-free material [HAS] preferentially.
- Food-grade material, direct food contact approved.

Scan to watch videos





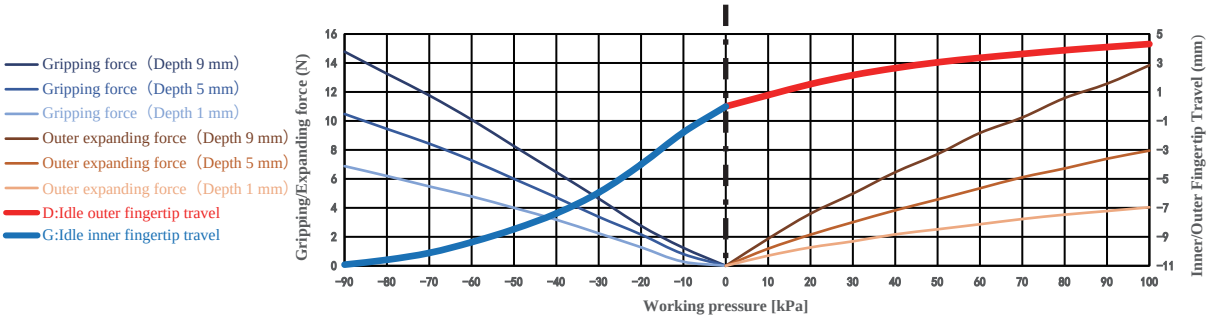

Paremeter

Gripping range	—	Gripping force	0-14.8N	Theoretical gripping load**	0-370g	Ideal gripping workpiece size*	—
Internal gripping range	—	Internal gripping force	0-13.8N	Theoretical internal gripping load**	0-346g	Ideal internal gripping workpiece size*	—
Joint size	G1/8	Life time***	1.5 million times	Contact Temperature	<220℃	Safe pressure***	<100kPa

*: The width of the cuboid that generates the maximum gripping force (two-finger gripping), the outer diameter of the cylinder (multi-finger gripping), the width of the square hole (two-finger internal gripping), or the inner diameter of the circular hole (multi-finger internal gripping);
**: Only the theoretical load of the ideal workpiece under standard working conditions is marked for reference and comparison. The real load capacity is also affected by factors such as the surface structure and roughness of the workpiece. Please take the measured data as the standard;
***: The working air pressure and the surface roughness of the workpiece in the usage scenario may have different degrees of impact on the life-time. Please configure Rochu control Unit. Do not exceed the safe air pressure.

DAC Module
(Direct-through)

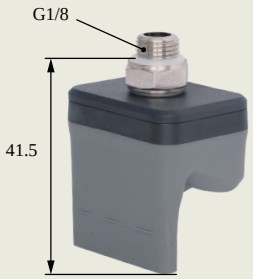

DAS Module
(Precise Positioning Direct-through)

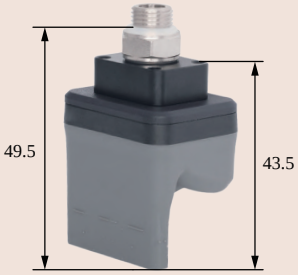

DAM Module
(Precise Positioning Multiple-through)

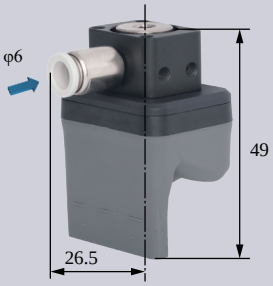

DAC Rigid Connection Installation

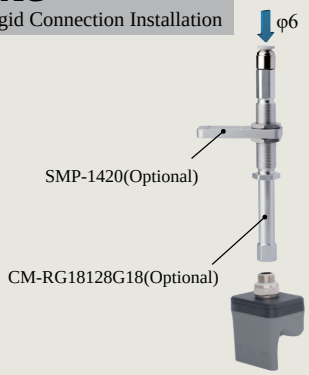

DAC Buffer Installation

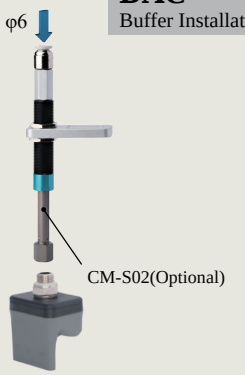

DAS Detection

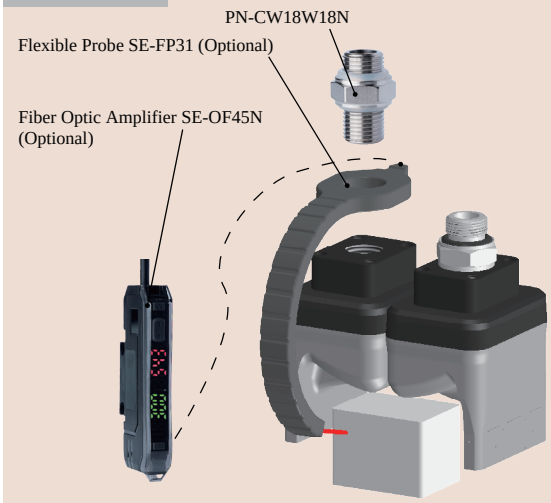

DAC Matrix Installation

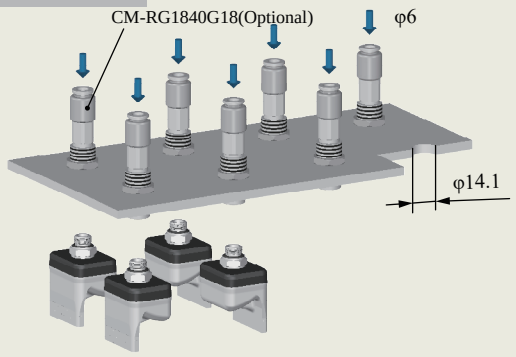

DAS Precise Positioning & Direct-through Installation

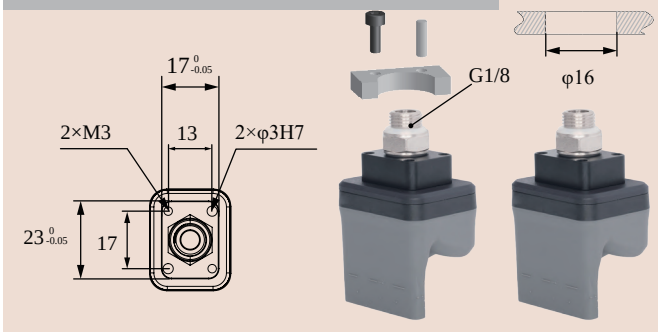

DAM Precise Positioning + Detection

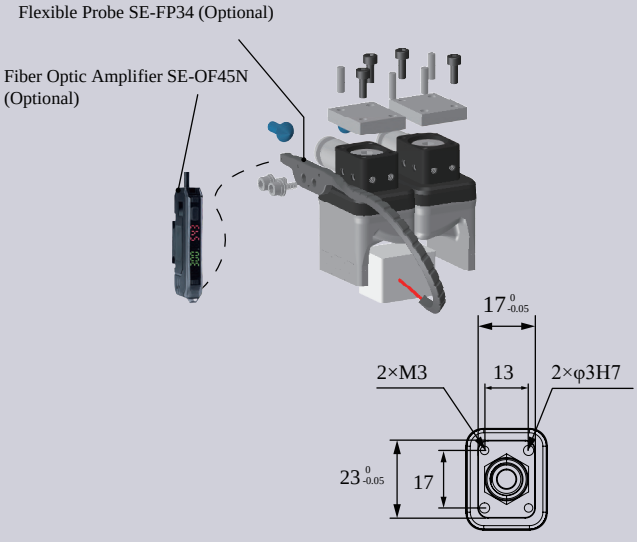

DAC-1GN3527[H]/SN Direct-through H Type	DAS-1GN3527[H]/SN Direct-through Precision Positioning H Type	DAM-1GN3527[H]/SN Multi-way Precision Positioning H Type
DAC-1GN3527[HAS]/SN Direct-through Dust-free H Type	DAS-1GN3527[HAS]/SN Direct-through Precision Positioning Dust-free H Type	DAM-1GN3527[HAS]/SN Multi-way Precision Positioning Dust-free H Type
		
Weight 22.7g	Weight 29.93g	Weight 34.08g

Scan to watch videos

Product features

- Suitable for complex-shaped workpieces. Profiling nails, designed to fit the workpiece's shape, are installed via soft grippers' fingertip screw holes. They can be made of rigid materials like plastic or metal, depending on the workpiece.
- Fingertips open under pressure state and clamp in a vacuum. Inner fingertips distance G can be adjusted by working pressure.It is suggested to be used with Rochu control unit.
- When soft grippers contact workpieces,especially those with dust-prevention needs,or miniature,lightweight and easily-adsorbable ones,choose dust-free material [HAS] preferentially.

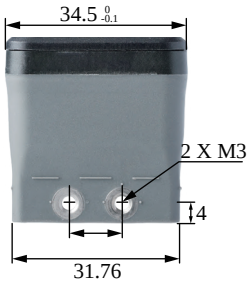



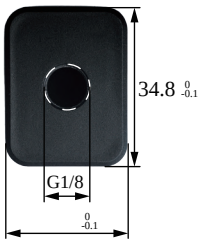

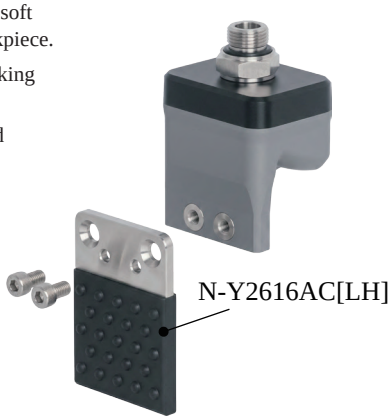





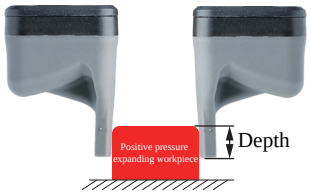

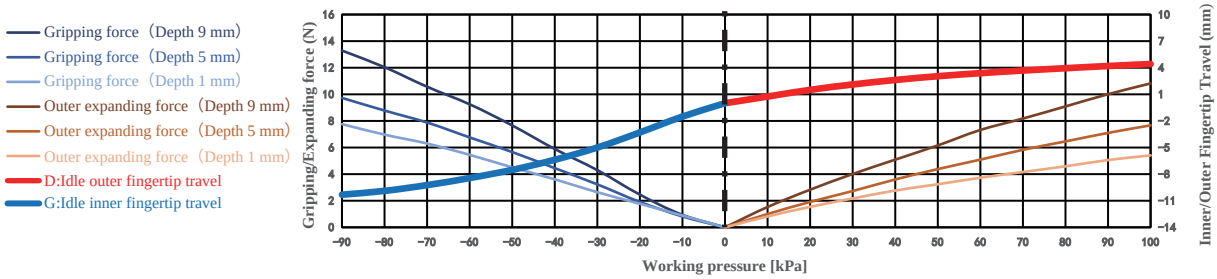

Paremeter

Gripping range	—	Gripping force	0-13.3N	Theoretical gripping load**	0-332g	Ideal gripping workpiece size*	—
Internal gripping range	—	Internal gripping force	0-10.8N	Theoretical internal gripping load**	0-271g	Ideal internal gripping workpiece size*	—
Joint size	G1/8	Life time***	1.5 million times	Contact Temperature	<220°C	Safe pressure***	<100kPa

*: The width of the cuboid that generates the maximum gripping force (two-finger gripping), the outer diameter of the cylinder (multi-finger gripping), the width of the square hole (two-finger internal gripping), or the inner diameter of the circular hole (multi-finger internal gripping);
**: Only the theoretical load of the ideal workpiece under standard working conditions is marked for reference and comparison. The real load capacity is also affected by factors such as the surface structure and roughness of the workpiece. Please take the measured data as the standard;
***: The working air pressure and the surface roughness of the workpiece in the usage scenario may have different degrees of impact on the life-time. Please configure Rochu control Unit. Do not exceed the safe air pressure.

DAC Module
(Direct-through)

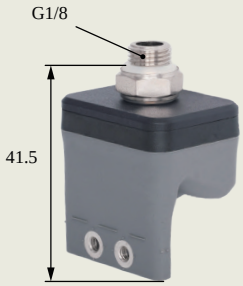

DAS Module
(Precise Positioning Direct-through)

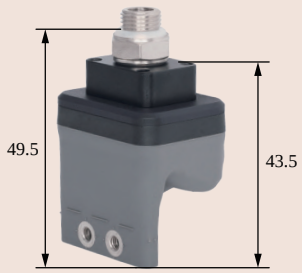

DAM Module
(Precise Positioning Multiple-through)

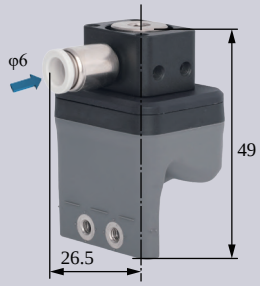

DAC Rigid Connection Installation

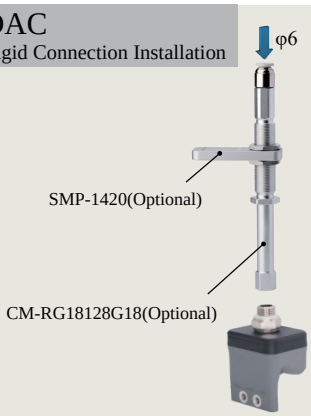

DAC Buffer Installation



DAS Detection + Profile Block Installation

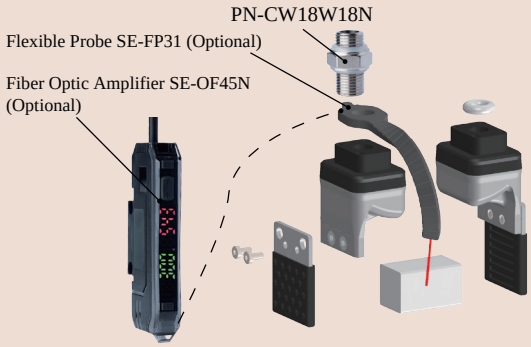

DAC Matrix Installation

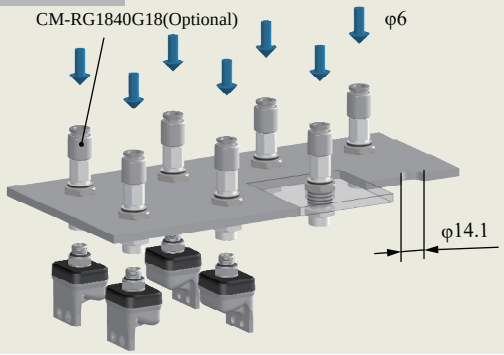

DAS Precise Positioning & Direct-through Installation

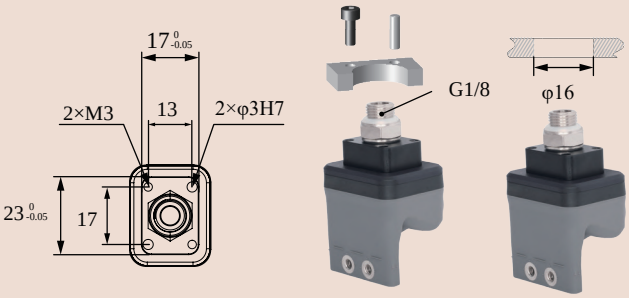

GPC Protective Installation



DAM Precise Positioning + Detection + Profile Block Installation

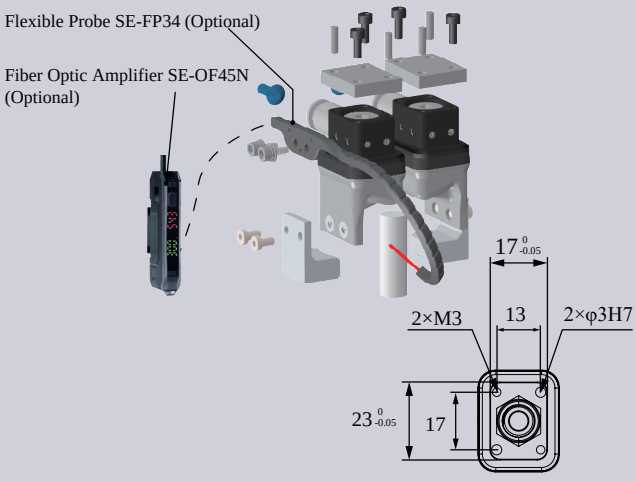



DAC-1G4030[H]/M Direct-through H Type	DAL-1G4030[H]/M Side-through H Type
DAC-1G4030[HAS]/M Direct-through Dust-free H Type	DAL-1G4030[HAS]/M Side-through Dust-free H Type



Weight	78g	Weight	76.9g

Product features

- The single-finger beak can be modularly combined. Fingertip opens under pressure and clamps in a vacuum. It is recommended to be used with Rochu control unit.
- Soft beak material is divided into Normal Material [H] and Dust-free Normal Material [HAS]. When the workpiece is light, or very soft, easy to adhere to adsorp on the soft beak, Dust-free Normal Material [HAS] is preferred.
- Food-grade material, direct food contact approved.

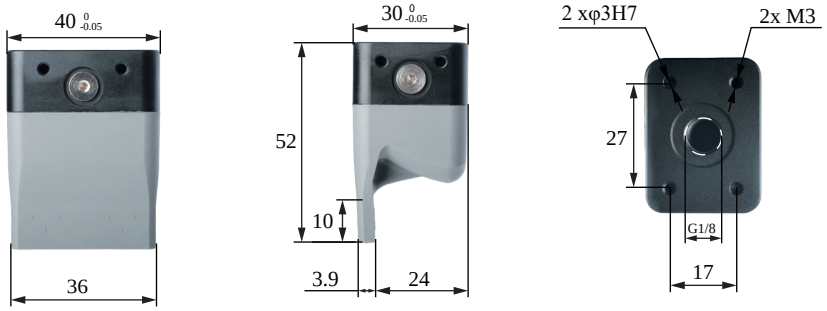

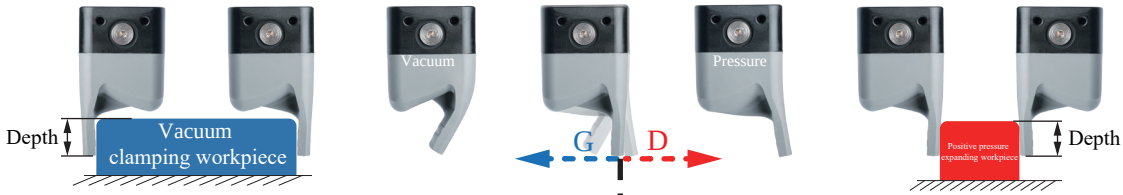

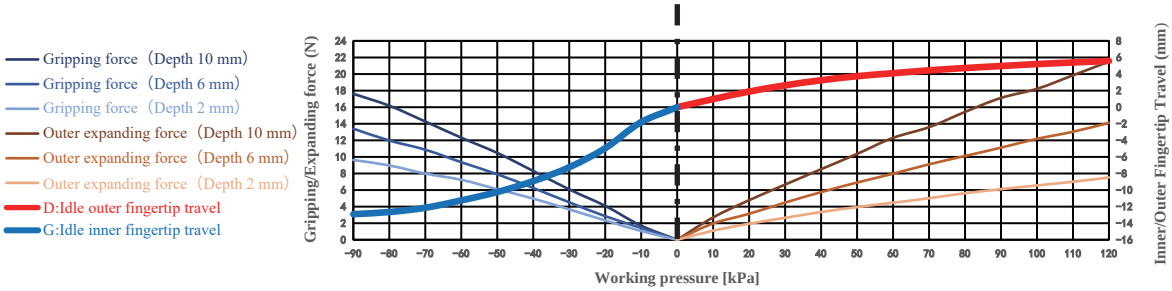

Paremeter

Gripping range	—	Gripping force	0-17.6N	Theoretical gripping load**	0-441g	Ideal gripping workpiece size*	—
Internal gripping range	—	Internal gripping force	0-21.5N	Theoretical internal gripping load**	0-538g	Ideal internal gripping workpiece size*	—
Joint size	G1/8	Life time***	1.5 million times	Contact Temperature	<220℃	Safe pressure***	<120kPa

*: The width of the cuboid that generates the maximum gripping force (two-finger gripping), the outer diameter of the cylinder (multi-finger gripping), the width of the square hole (two-finger internal gripping), or the inner diameter of the circular hole (multi-finger internal gripping);
**: Only the theoretical load of the ideal workpiece under standard working conditions is marked for reference and comparison. The real load capacity is also affected by factors such as the surface structure and roughness of the workpiece. Please take the measured data as the standard;
***: The working air pressure and the surface roughness of the workpiece in the usage scenario may have different degrees of impact on the life-time. Please configure Rochu control Unit. Do not exceed the safe air pressure.

DAC Straight Fitting Installation

Scan to watch videos

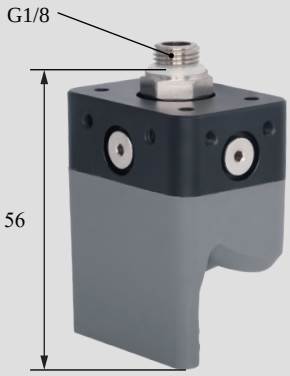

DAL Side Fitting Installation

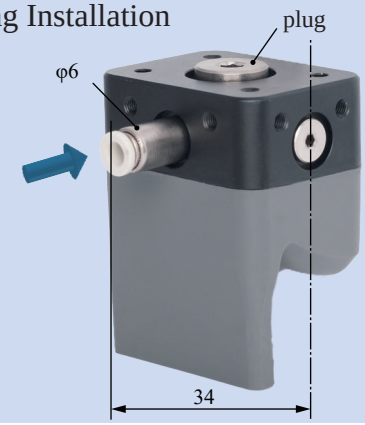

Rigid Connection Installation

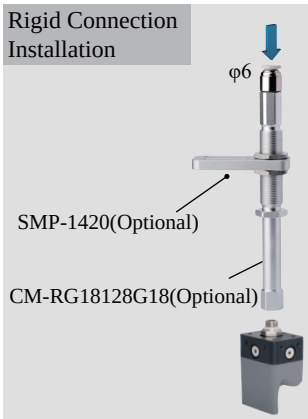

Buffer Installation

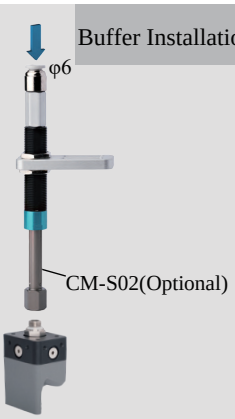

Side-through Partition Plate Installation

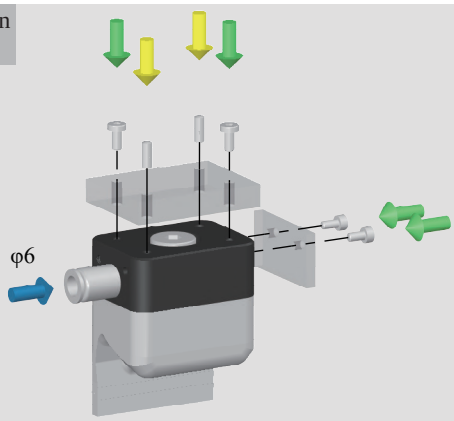

Precise Positioning Installation

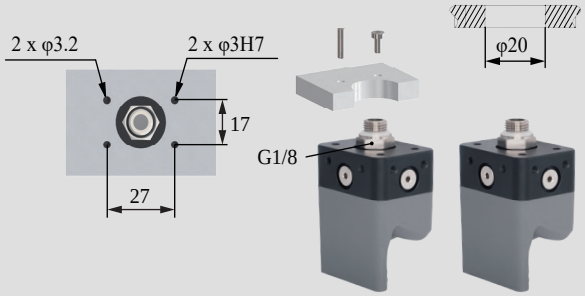

Matrix Installation

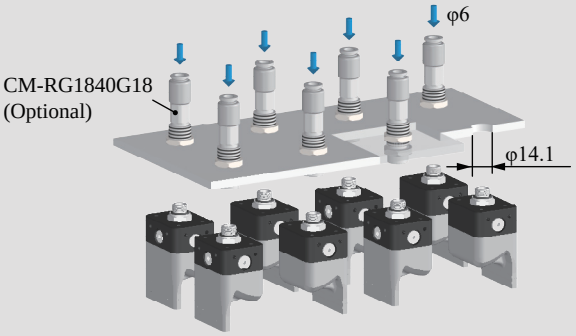

Installation of Optical Fiber Sensors

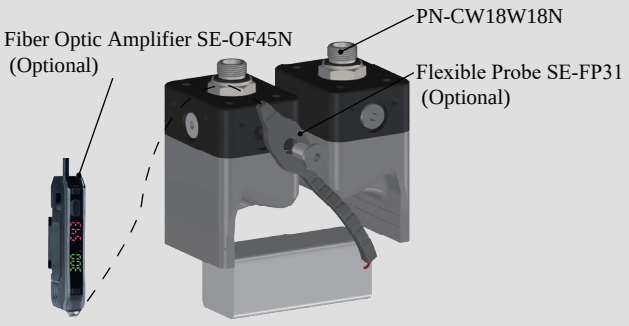



DAC-1GN4030[H]/M Direct-through H Type	DAL-1GN4030[H]/M Side-through H Type
DAC-1GN4030[HAS]/M Direct-through Dust-free H Type	DAL-1GN4030[HAS]/M Side-through Dust-free H Type



Weight	79.4g	Weight	78.3g

Product features

- Suitable for complex-shaped workpieces. Profiling nails, designed to fit the workpiece's shape, are installed via soft grippers' fingertip screw holes. They can be made of rigid materials like plastic or metal, depending on the workpiece.
- Fingertips open under pressure state and clamp in a vacuum. Inner fingertips distance G can be adjusted by working pressure.It is suggested to be used with Rochu control unit.
- When soft grippers contact workpieces,especially those with dust-prevention needs,or miniature,lightweight and easily-adsorbable ones,choose dust-free material [HAS] preferentially.
- Food-grade material, safe for direct contact with food.

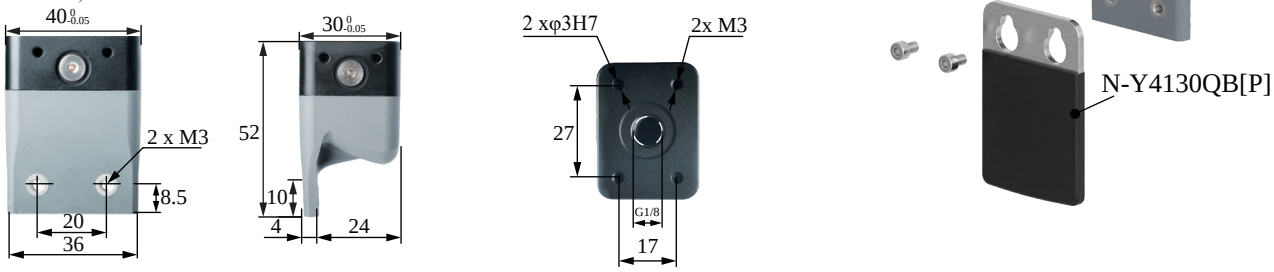

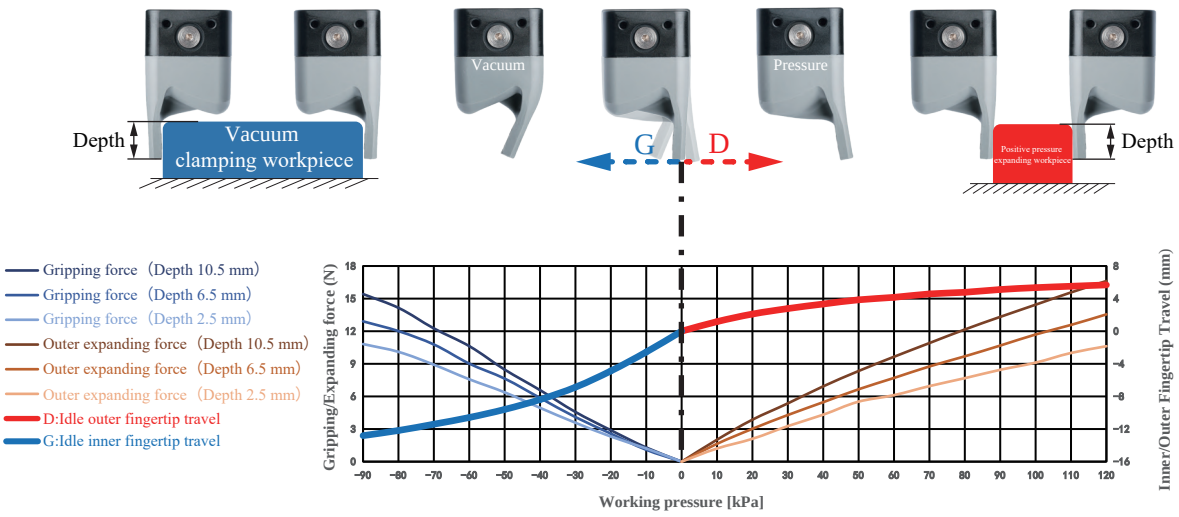

Paremeter

Gripping range	—	Gripping force	0-15.4N	Theoretical gripping load**	0-386g	Ideal gripping workpiece size*	—
Internal gripping range	—	Internal gripping force	0-16.6N	Theoretical internal gripping load**	0-416g	Ideal internal gripping workpiece size*	—
Joint size	G1/8	Life time***	1.5 million times	Contact Temperature	<220℃	Safe pressure***	<120kPa

*: The width of the cuboid that generates the maximum gripping force (two-finger gripping), the outer diameter of the cylinder (multi-finger gripping), the width of the square hole (two-finger internal gripping), or the inner diameter of the circular hole (multi-finger internal gripping);
**: Only the theoretical load of the ideal workpiece under standard working conditions is marked for reference and comparison. The real load capacity is also affected by factors such as the surface structure and roughness of the workpiece. Please take the measured data as the standard;
***: The working air pressure and the surface roughness of the workpiece in the usage scenario may have different degrees of impact on the life-time. Please configure Rochu control Unit. Do not exceed the safe air pressure.

DAC Straight Fitting Installation

Scan to watch videos

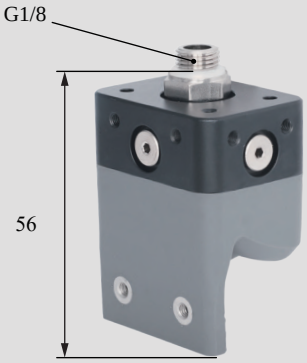

DAL Side Fitting Installation

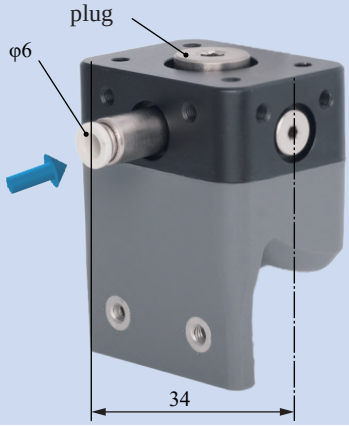

Rigid Connection Installation

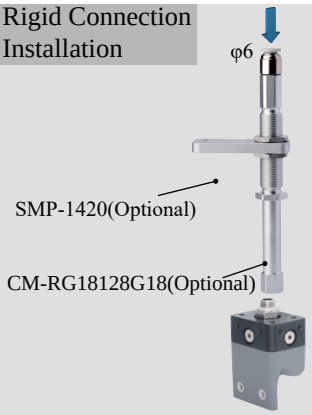

Buffer Installation



DAC Inspection + Soft Wing Installation

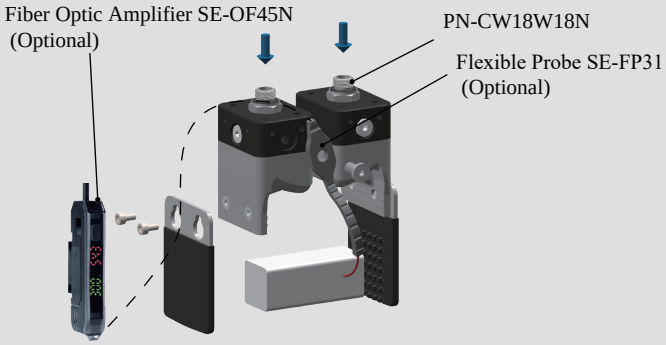

Precise Positioning Installation

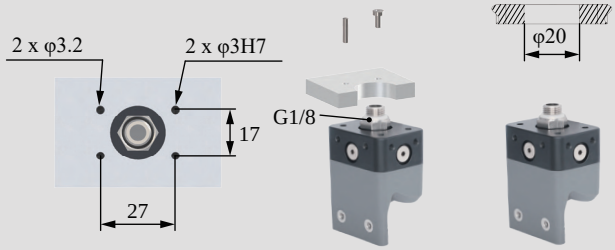

Matrix Installation

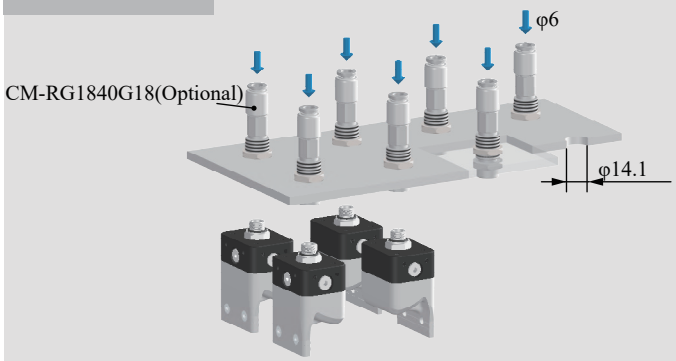

GPC Protective Installation



Side-through Partition Plate Installation

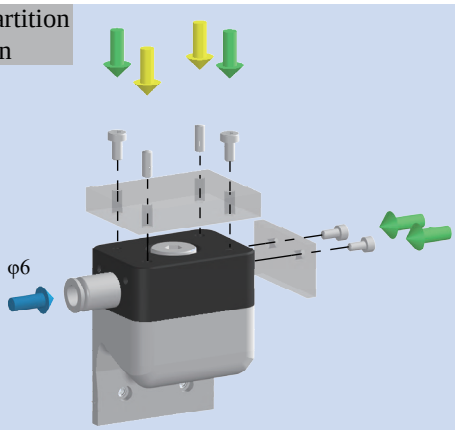



DAC-1GN4030[LH]/M Direct-through Anti-static H Type	DAL-1GN4030[LH]/M Side-through Anti-static H Type
DAC-1GN4030[LHAS]/M Direct-through Anti-static Dust-free H Type	DAL-1GN4030[LHAS]/M Side-through Anti-static Dust-free H Type
Weight 79.4g	**Weight** 78.3g



Product features

- Suitable for complex-shaped workpieces. Profiling nails, designed to fit the workpiece's shape, are installed via soft grippers' fingertip screw holes. They can be made of rigid materials like plastic or metal, depending on the workpiece.
- The Anti-static material meets the requirements of the national standard GB/T11210-2014, with a point-to-point resistance of 0.1-1000MΩ. The Anti-static Dust-free type [LHAS] is more suitable for dealing with workpieces that have dustproof requirements or are miniature and lightweight. - The single-finger beak can be modularly combined. Fingertip opens under pressure and clamps in a vacuum. It is recommended to be used with Rochu control unit.



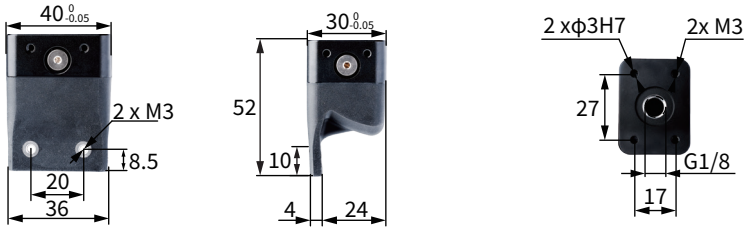

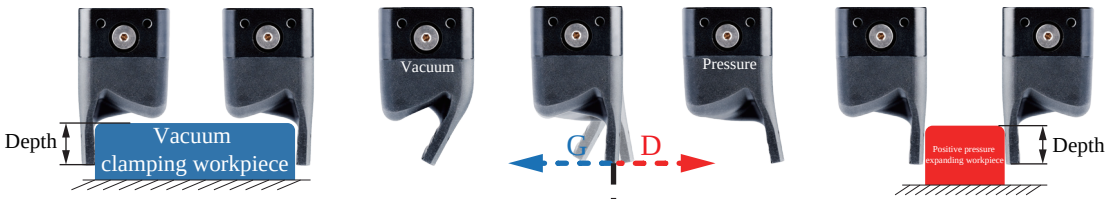

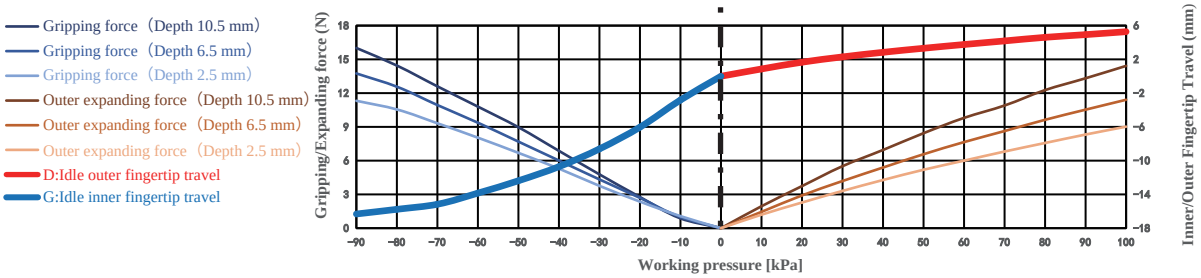

Paremeter

Gripping range	—	Gripping force	0-16N	Theoretical gripping load**	0-400g	Ideal gripping workpiece size*	—
Internal gripping range	—	Internal gripping force	0-14.4N	Theoretical internal gripping load**	0-361g	Ideal internal gripping workpiece size*	—
Joint size	G1/8	Life time***	1.5 million times	Contact Temperature	<220°C	Safe pressure***	<100kPa

*: The width of the cuboid that generates the maximum gripping force (two-finger gripping), the outer diameter of the cylinder (multi-finger gripping), the width of the square hole (two-finger internal gripping), or the inner diameter of the circular hole (multi-finger internal gripping);
**: Only the theoretical load of the ideal workpiece under standard working conditions is marked for reference and comparison. The real load capacity is also affected by factors such as the surface structure and roughness of the workpiece. Please take the measured data as the standard;
***: The working air pressure and the surface roughness of the workpiece in the usage scenario may have different degrees of impact on the life-time. Please configure Rochu control Unit. Do not exceed the safe air pressure.

DAC Straight Fitting Installation

Scan to watch videos



DAL Side Fitting Installation

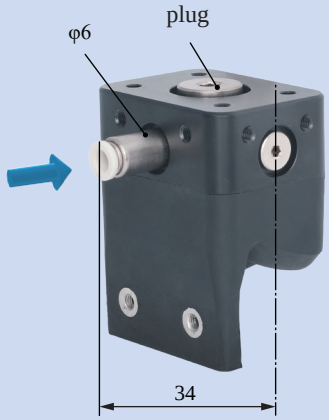

Rigid Connection Installation



Buffer Installation

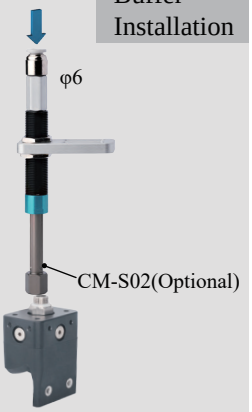

Side-through Partition Plate Installation

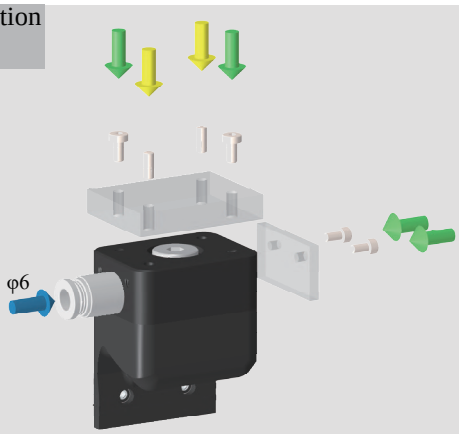

Precise Positioning Installation

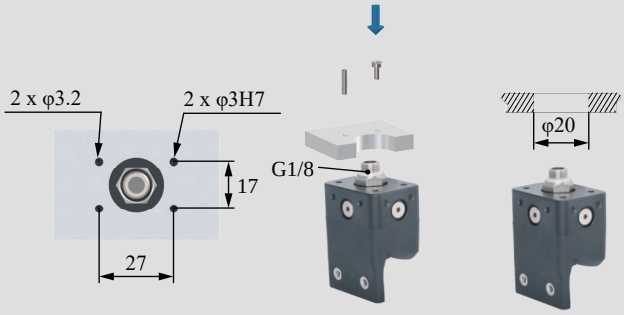

Matrix Installation

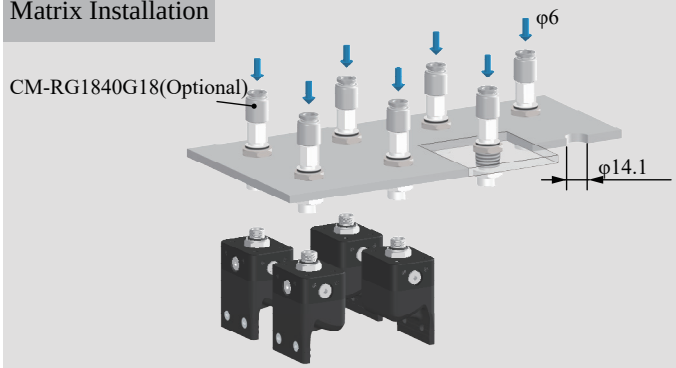

GPC Protective Installation



DAC Inspection + Soft Wing Installation

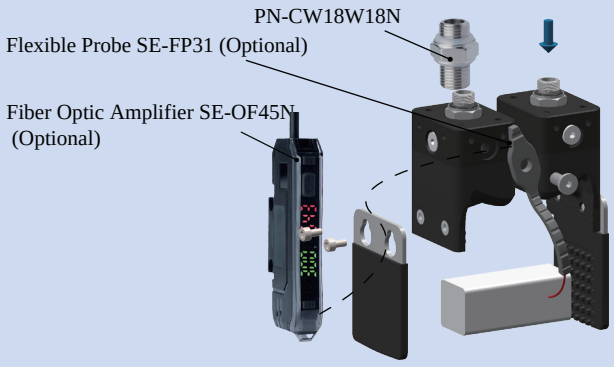



DAC-1U4030[H]/M Direct-through H Type	DAL-1U4030[H]/M Side-through H Type
DAC-1U4030[HAS]/M Direct-through Dust-free H Type	DAL-1U4030[HAS]/M Side-through Dust-free H Type



Weight	74.2g	Weight	73.1g

Product features

- The single-finger beak can be modularly combined. Fingertip opens under pressure and clamps in a vacuum. It is recommended to be used with Rochu control unit.
- Soft beak material is divided into Normal Material [H] and Dust-free Normal Material [HAS]. When the workpiece is light, or very soft, easy to adhere to adsorp on the soft beak, Dust-free Normal Material [HAS] is preferred.
- Food-grade material, direct food contact approved.

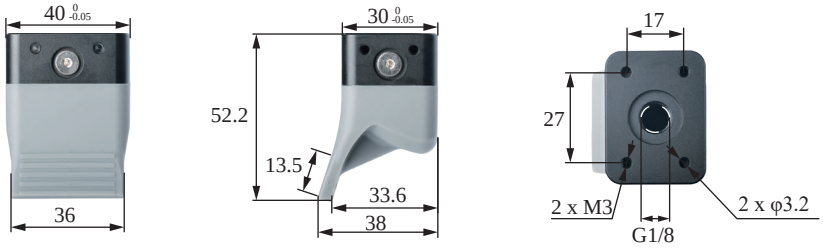

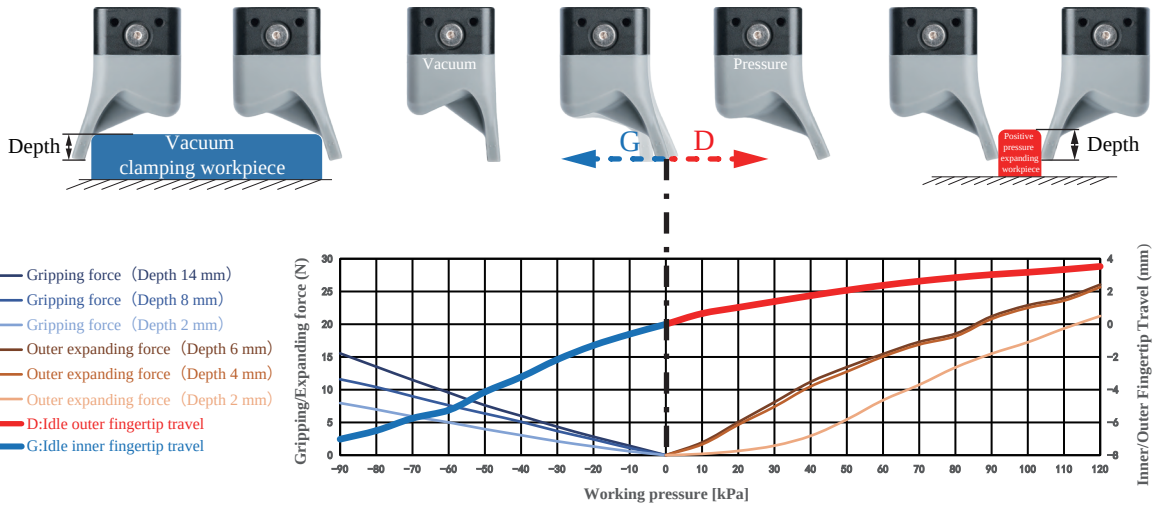

Paremeter

Gripping range	—	Gripping force	0-15.6N	Theoretical gripping load**	0-389g	Ideal gripping workpiece size*	—
Internal gripping range	—	Internal gripping force	0-26.1N	Theoretical internal gripping load**	0-651g	Ideal internal gripping workpiece size*	—
Joint size	G1/8	Life time***	1.5 million times	Contact Temperature	＜220℃	Safe pressure***	<120kPa

*: The width of the cuboid that generates the maximum gripping force (two-finger gripping), the outer diameter of the cylinder (multi-finger gripping), the width of the square hole (two-finger internal gripping), or the inner diameter of the circular hole (multi-finger internal gripping);
**: Only the theoretical load of the ideal workpiece under standard working conditions is marked for reference and comparison. The real load capacity is also affected by factors such as the surface structure and roughness of the workpiece. Please take the measured data as the standard;
***: The working air pressure and the surface roughness of the workpiece in the usage scenario may have different degrees of impact on the life-time. Please configure Rochu control Unit. Do not exceed the safe air pressure.

DAC Straight Fitting Installation

Scan to watch videos

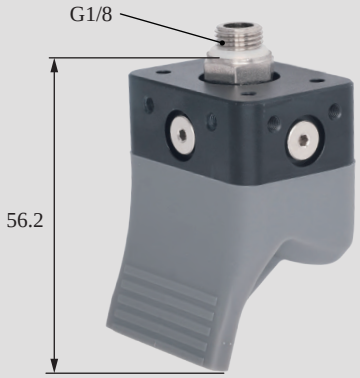

DAL Side Fitting Installation

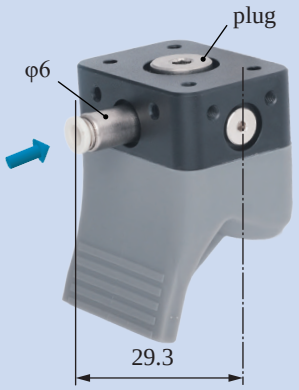

Rigid Connection Installation

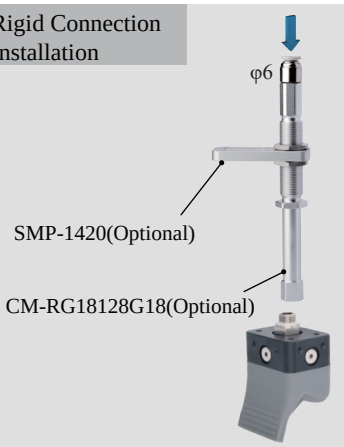

Buffer Installation



Side-through Partition Plate Installation

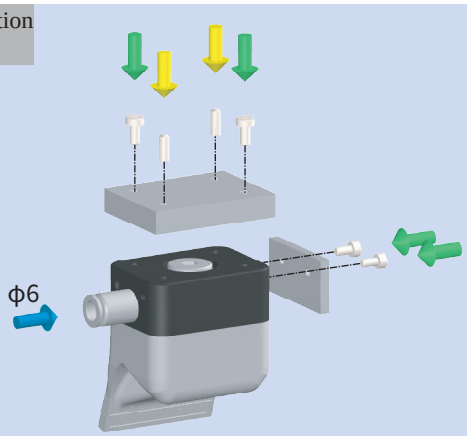

Precise Positioning Installation

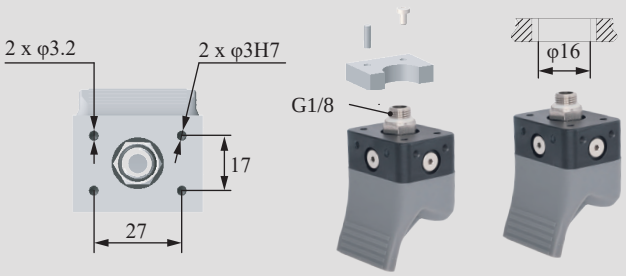

Matrix Installation

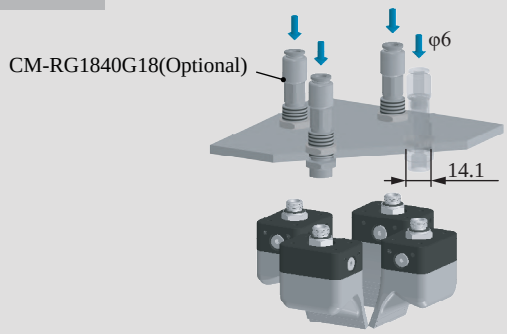

Installation of Optical Fiber Sensors

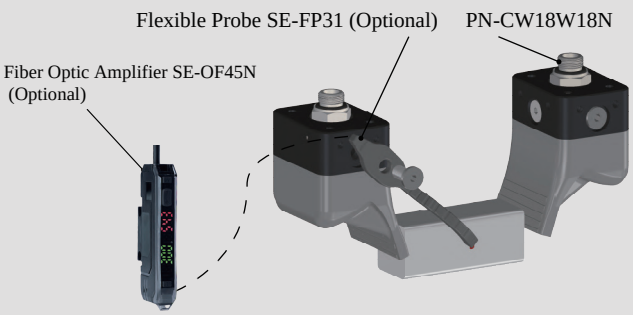



DAC-1UN4030[H]/M Direct-through H Type	DAL-1UN4030[H]/M Side-through H Type
DAC-1UN4030[HAS]/M Direct-through Dust-free H Type	DAL-1UN4030[HAS]/M Side-through Dust-free H Type
Weight 75.7g	Weight 74.6g



- Suitable for complex-shaped workpieces. Profiling nails, designed to fit the workpiece's shape, are installed via soft grippers' fingertip screw holes. They can be made of rigid materials like plastic or metal, depending on the workpiece.
- The single-finger beak can be modularly combined. Fingertip opens under pressure and clamps in a vacuum. It is recommended to be used with Rochu control unit.
- Soft beak material is divided into Normal Material [H] and Dust-free Normal Material [HAS]. When the workpiece is light, or very soft, easy to adhere to adsorp on the soft beak, Dust-free Normal Material [HAS] is preferred.
- Food-grade material, direct food contact approved.

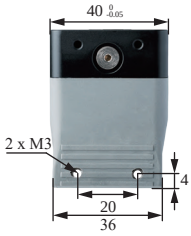

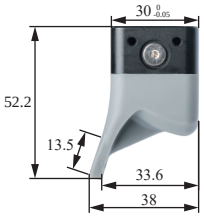

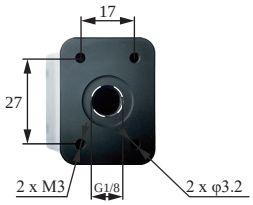



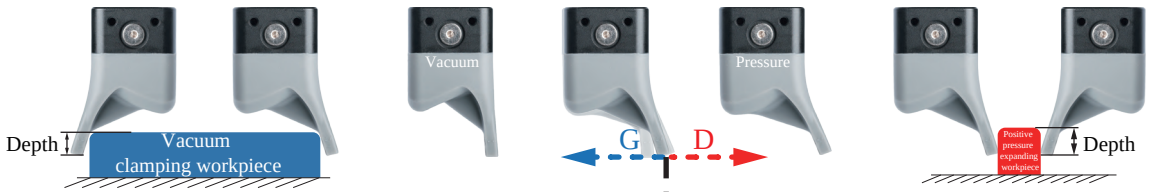

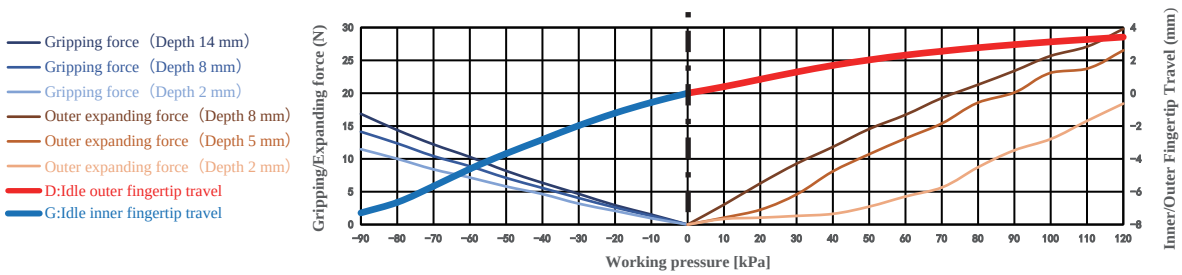

Gripping range	—	Gripping force	0-16.9N	Theoretical gripping load**	0-421g	Ideal gripping workpiece size*	—
Internal gripping range	—	Internal gripping force	0-29.8N	Theoretical internal gripping load**	0-745g	Ideal internal gripping workpiece size*	—
Joint size	G1/8	Life time***	1.5 million times	Contact Temperature	<220°C	Safe pressure***	<120kPa

DAC Straight Fitting Installation

Scan to watch videos

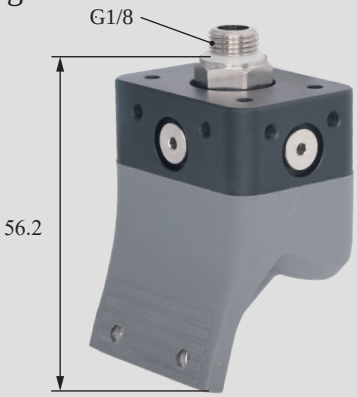

DAL Side Fitting Installation

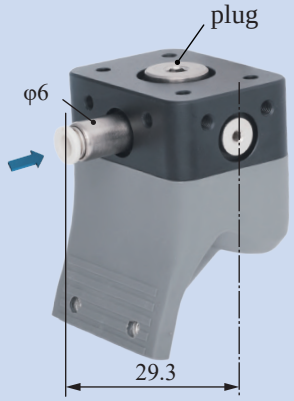

Rigid Connection Installation

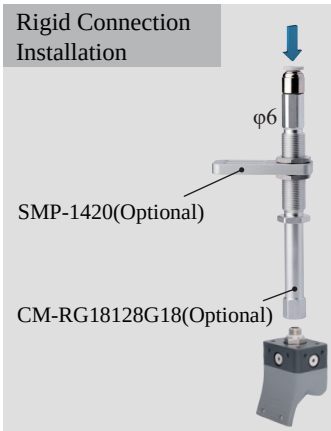

Buffer Installation



DAC Inspection + Soft Wing Installation



Precise Positioning Installation

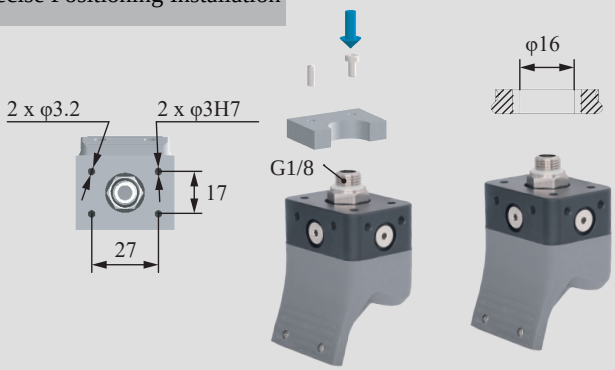

Matrix Installation

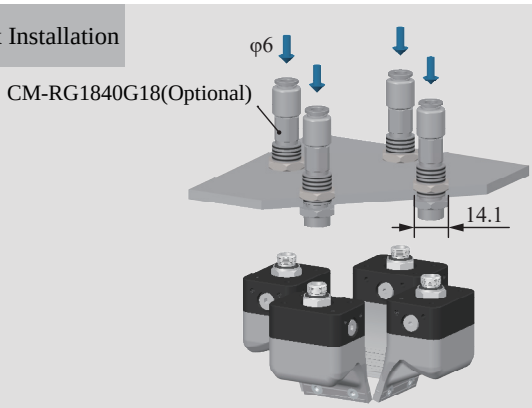

GPC Protective Installation



Side-through Partition Plate Installation

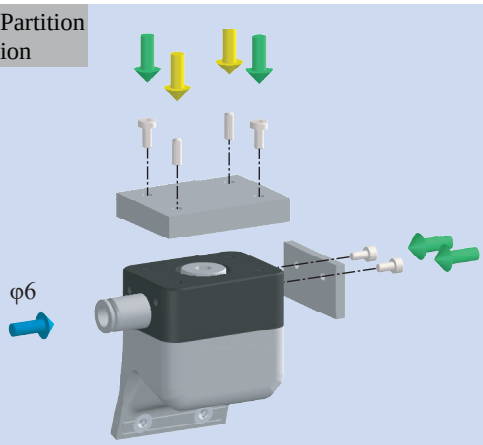

B-1UN4030[H]/M



DAC-1GN5040[H]/M Direct-through H Type	DAL-1GN5040[H]/M Side-through H Type
DAC-1GN5040[HAS]/M Direct-through Dust-free H Type	DAL-1GN5040[HAS]/M Side-through Dust-free H Type



Weight	132.2g	Weight	132.3g

Product features

- Suitable for complex-shaped workpieces. Profiling nails, designed to fit the workpiece's shape, are installed via soft grippers' fingertip screw holes. They can be made of rigid materials like plastic or metal, depending on the workpiece.
- Fingertips open under pressure state and clamp in a vacuum. Inner fingertips distance G can be adjusted by working pressure.It is suggested to be used with Rochu control unit.
- When soft grippers contact workpieces,especially those with dust-prevention needs,or miniature,lightweight and easily-adsorbable ones,choose dust-free material [HAS] preferentially.
- Food-grade material, safe for direct contact with food.

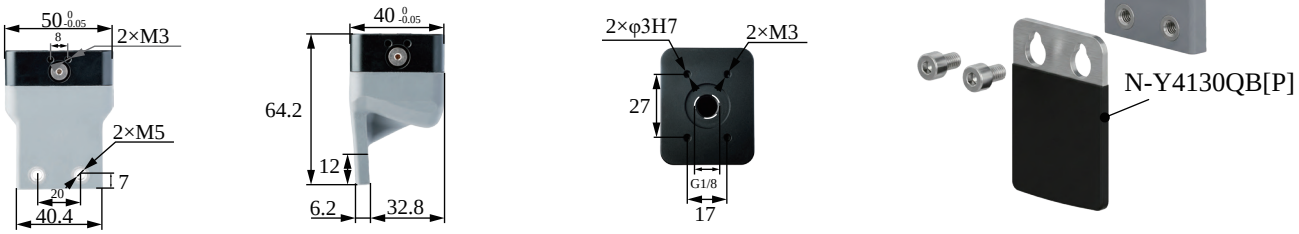

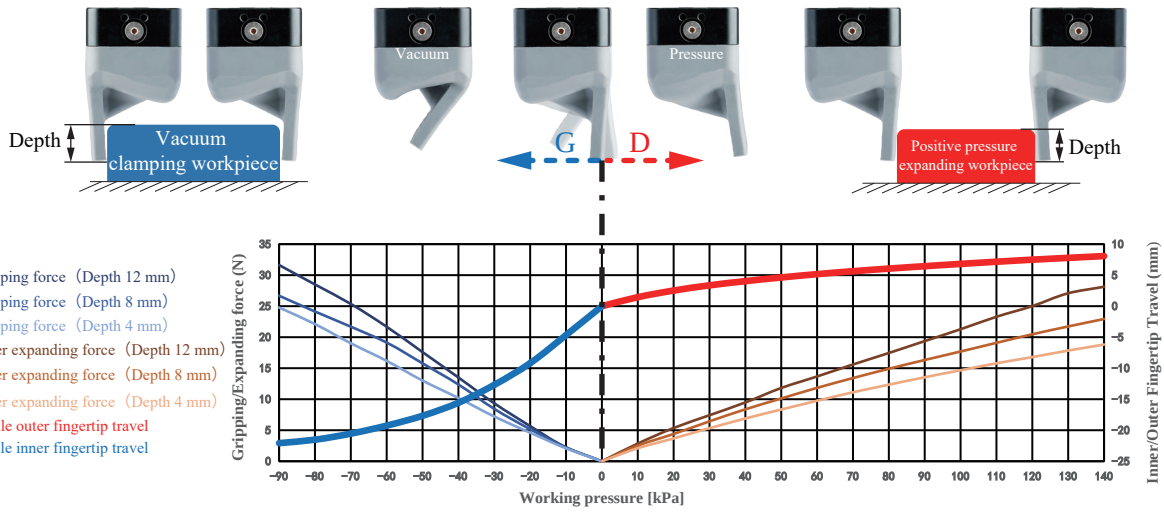

Paremeter

Gripping range	—	Gripping force	0-31.6N	Theoretical gripping load**	0-791g	Ideal gripping workpiece size*	—
Internal gripping range	—	Internal gripping force	0-28.1N	Theoretical internal gripping load**	0-703g	Ideal internal gripping workpiece size*	—
Joint size	G1/8	Life time***	1.5 million times	Contact Temperature	<220℃	Safe pressure***	<140kPa

*: The width of the cuboid that generates the maximum gripping force (two-finger gripping), the outer diameter of the cylinder (multi-finger gripping), the width of the square hole (two-finger internal gripping), or the inner diameter of the circular hole (multi-finger internal gripping);
**: Only the theoretical load of the ideal workpiece under standard working conditions is marked for reference and comparison. The real load capacity is also affected by factors such as the surface structure and roughness of the workpiece. Please take the measured data as the standard;
***: The working air pressure and the surface roughness of the workpiece in the usage scenario may have different degrees of impact on the life-time. Please configure Rochu control Unit. Do not exceed the safe air pressure.

DAC Straight Fitting Installation

Scan to watch videos

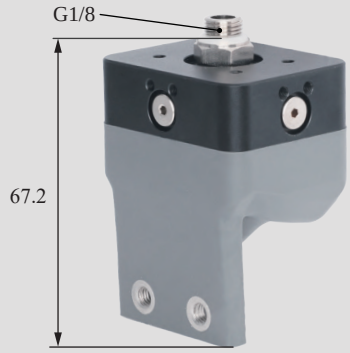

DAL Side Fitting Installation

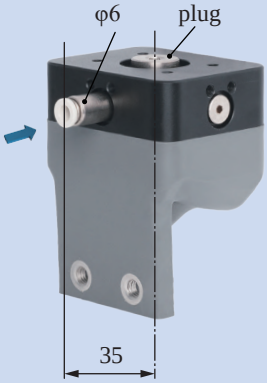

Rigid Connection Installation

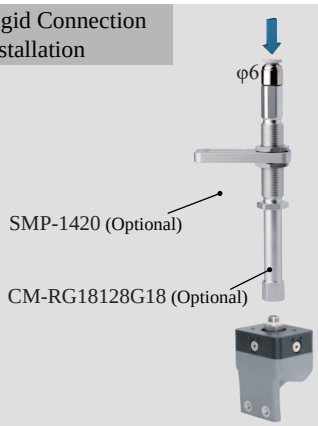

Buffer Installation

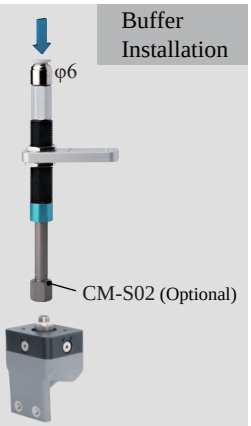

DAL Inspection + Profiled Installation

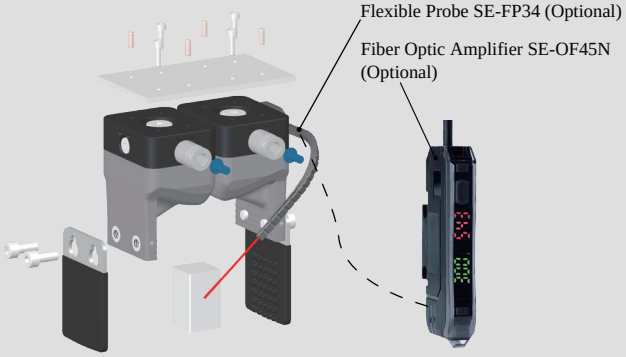

Precise Positioning Installation

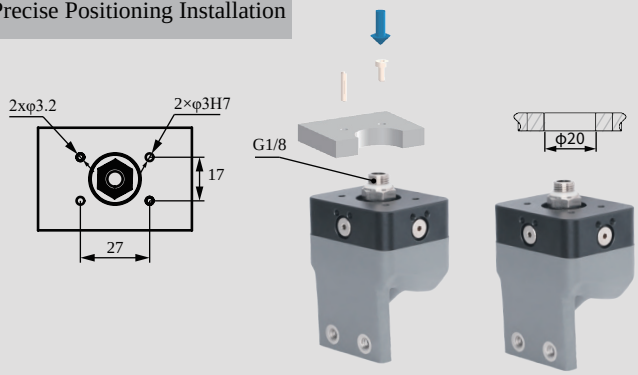

Matrix Installation

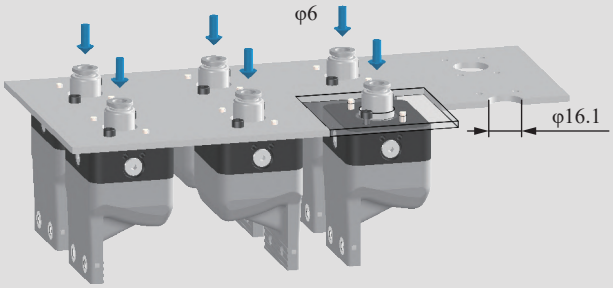

GPC Protective Installation



Side-through Partition Plate Installation

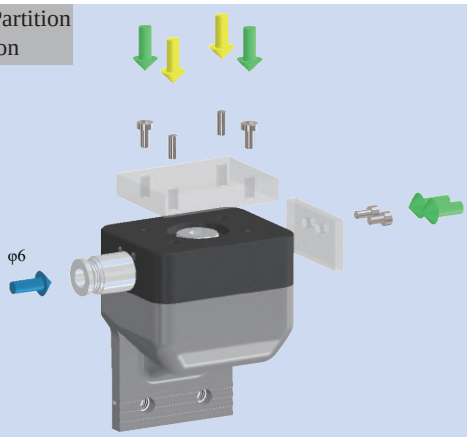



DAC-1GN5040[LH]/M Direct-through H Type		DAL-1GN5040[LH]/M Side-through H Type	
DAC-1GN5040[LHAS]/M Direct-through Anti-static H Type		DAL-1GN5040[LHAS]/M Side-through Anti-static Dust-free H Type	
Weight	132.2g	Weight	132.3g



- Suitable for complex-shaped workpieces. Profiling nails, designed to fit the workpiece's shape, are installed via soft grippers' fingertip screw holes. They can be made of rigid materials like plastic or metal, depending on the workpiece.
- Anti-static material meets the national standard GB/T11210-2014, point-to-point resistance 0.1-1000MΩ requirements. When the workpiece is light, or very soft, easy to adhere to adsorp on the soft beak, anti-static dust-free traceless material [LHAS] is preferred

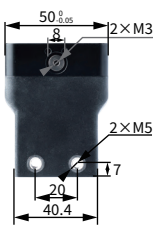

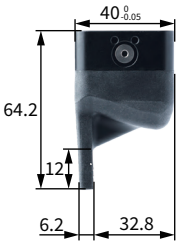

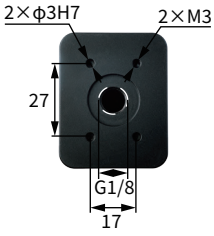

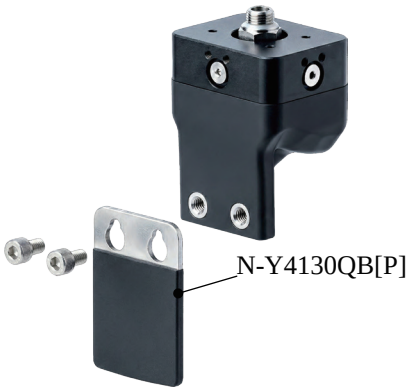

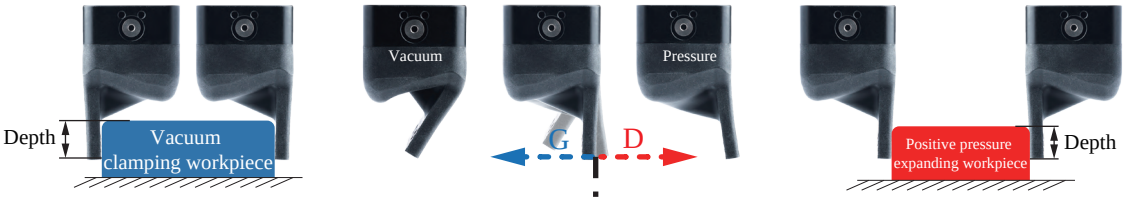

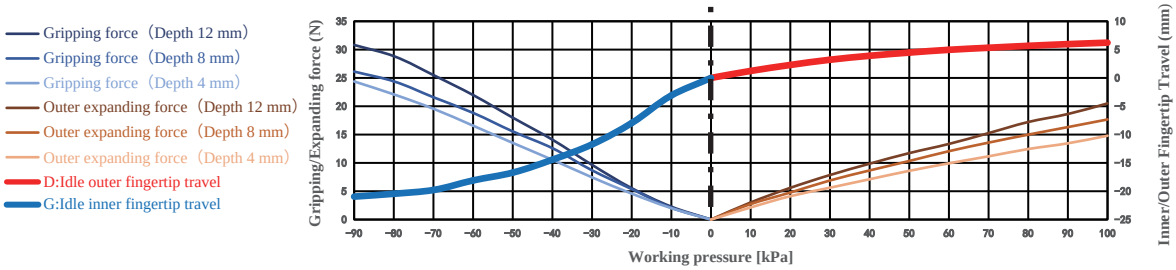

Gripping range	—	Gripping force	0-30.8N	Theoretical gripping load**	0-771g	Ideal gripping workpiece size*	—
Internal gripping range	—	Internal gripping force	0-20.5N	Theoretical internal gripping load**	0-513g	Ideal internal gripping workpiece size*	—
Joint size	G1/8	Life time***	1.5 million times	Contact Temperature	＜220°C	Safe pressure***	<100kPa

DAC Straight Fitting Installation

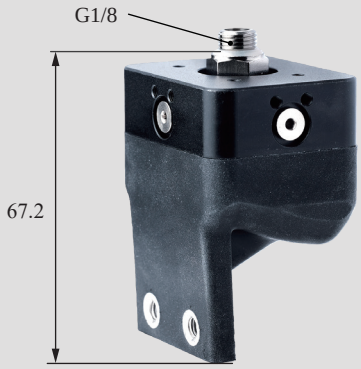

DAL Side Fitting Installation

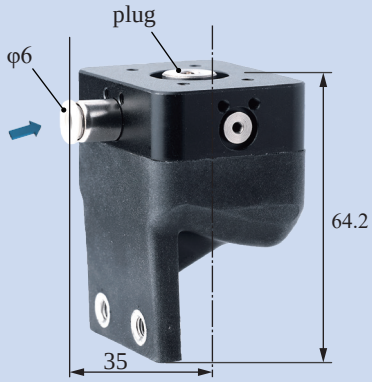

Rigid Connection Installation



Buffer Installation

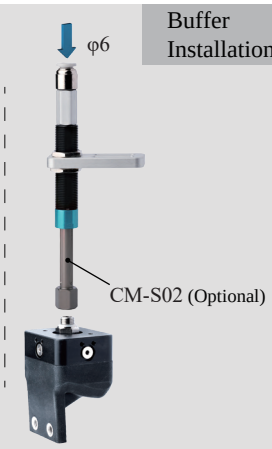

DAL Inspection + Profiled Installation

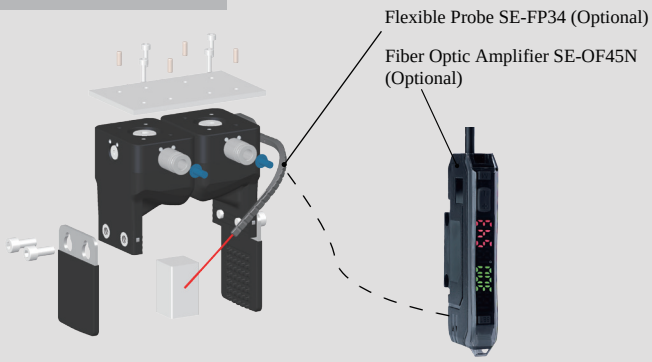

Precise Positioning Installation

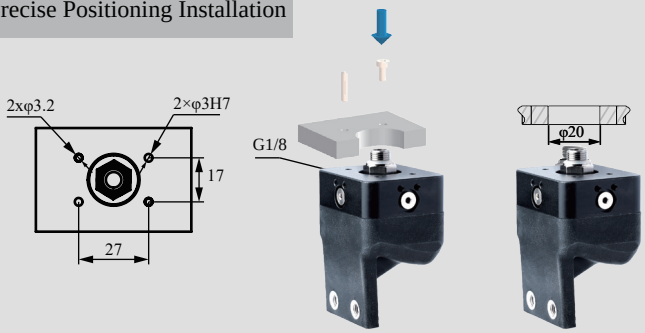

Matrix Installation

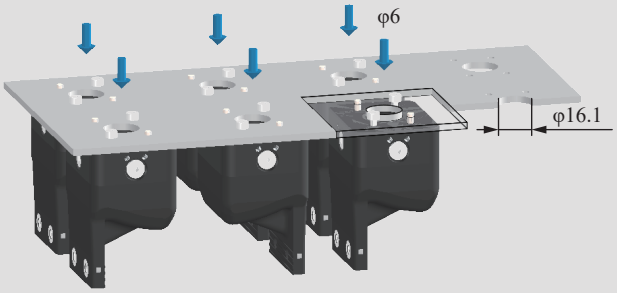

GPC Protective Installation



Side-through Partition Plate Installation

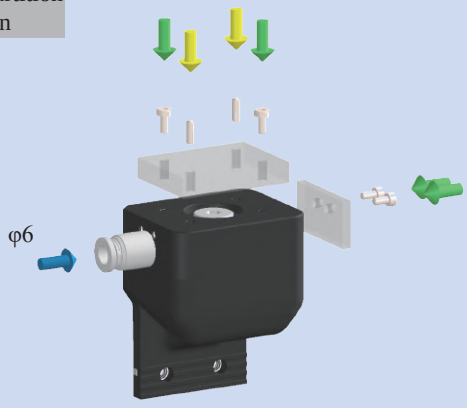



DAC-1GN7056[H]/M Direct-through H Type		DAL-1GN7056[H]/M Side-through H Type	
DAC-1GN7056[HAS]/M Direct-through Dust-free H Type		DAL-1GN7056[HAS]/M Side-through Dust-free H Type	
Weight	268g	Weight	266.4g



- Suitable for complex-shaped workpieces. Profiling nails, designed to fit the workpiece's shape, are installed via soft grippers' fingertip screw holes. They can be made of rigid materials like plastic or metal, depending on the workpiece.
- Fingertips open under pressure state and clamp in a vacuum. Inner fingertips distance G can be adjusted by working pressure.It is suggested to be used with Rochu control unit.
- When soft grippers contact workpieces,especially those with dust-prevention needs,or miniature,lightweight and easily-adsorbable ones,choose dust-free material [HAS] preferentially.
- Food-grade material, safe for direct contact with food.

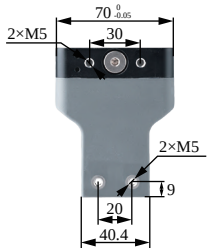

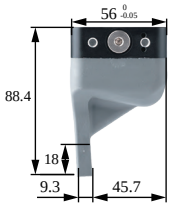

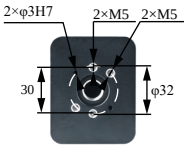

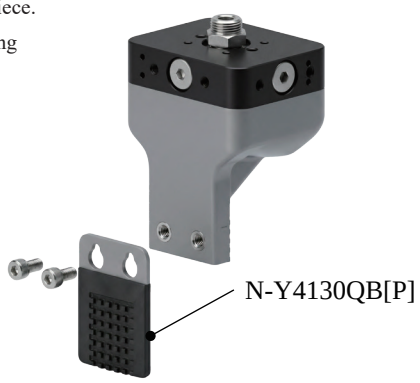

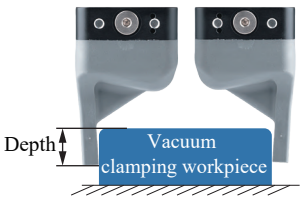

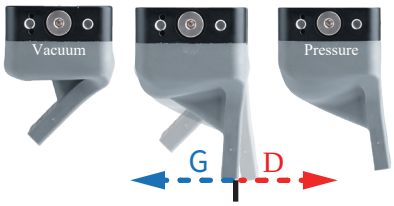



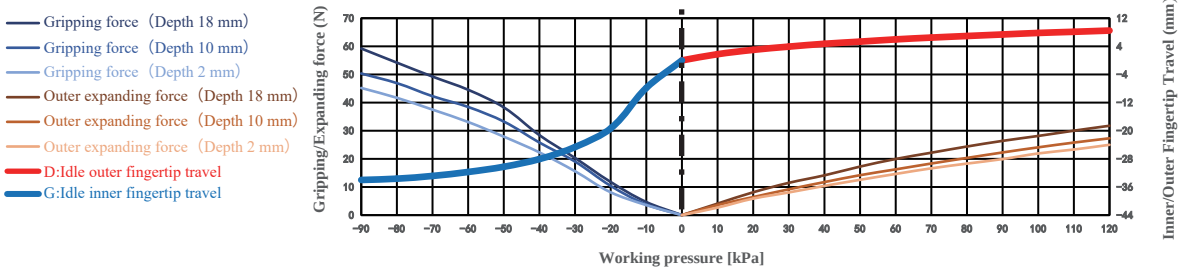

Gripping range	—	Gripping force	0-59.2N	Theoretical gripping load**	0-1481g	Ideal gripping workpiece size*	—
Internal gripping range	—	Internal gripping force	0-31.8N	Theoretical internal gripping load**	0-794g	Ideal internal gripping workpiece size*	—
Joint size	G1/4	Life time***	1.5 million times	Contact Temperature	<220°C	Safe pressure***	<120kPa

DAC Straight Fitting Installation

Scan to watch videos

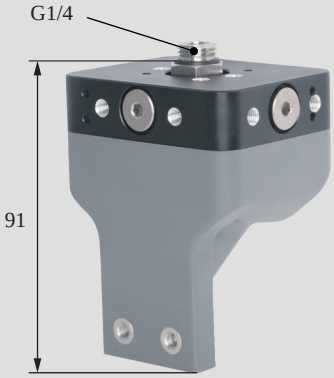

DAL Side Fitting Installation

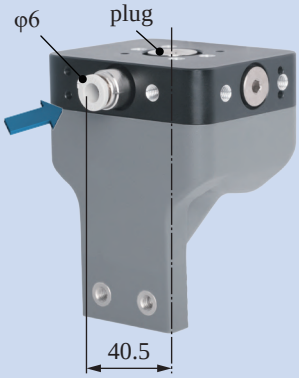

Rigid Connection Installation

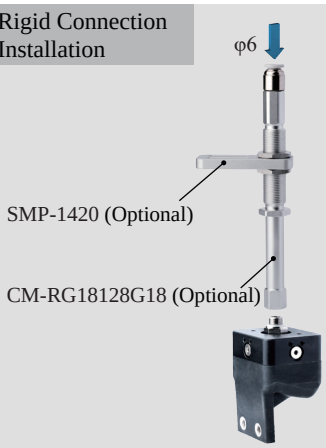

Buffer Installation

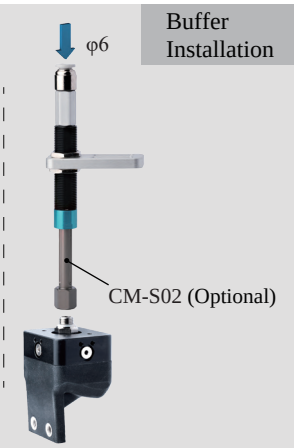

DAL Inspection + Profiled Installation

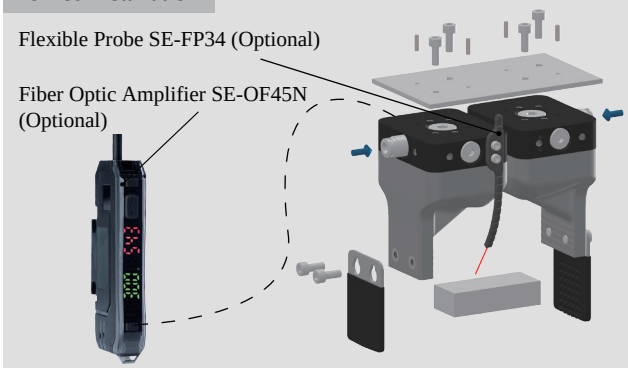

Precise Positioning Installation

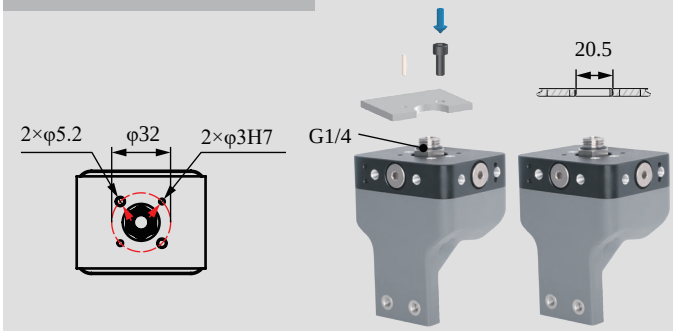

Matrix Installation

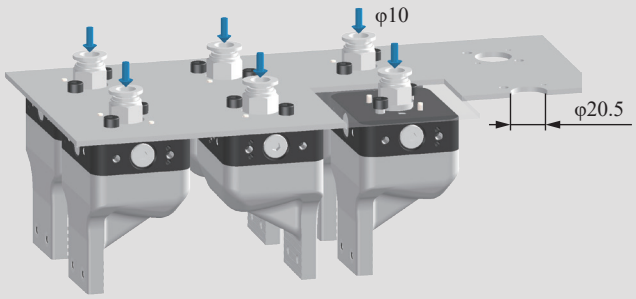

GPC Protective Installation



Side-through Partition Plate Installation

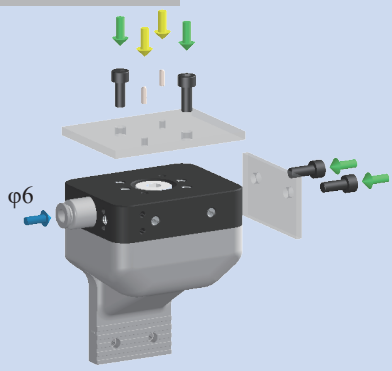



DAC-20201[H]/S Direct-through H Type	DAL-20201[H]/S Side-through H Type
DAC-20201[HAS]/S Direct-through Dust-free H Type	DAL-20201[HAS]/S Side-through Dust-free H Type



Weight	1.1g	Weight	16.3g

Product features

- Fingertip open under pressure and clamped in a vacuum. Fingertip distance G can be adjusted by working pressure.It is suggested to be used with Rochu control unit.
- Soft beak material is divided into Normal Material [H] and Dust-free Normal Material [HAS]. When the workpiece is light, or very soft, easy to adhere to adsorp on the soft beak, Dust-free Normal Material [HAS] is preferred.
- Food-grade material, direct food contact approved.

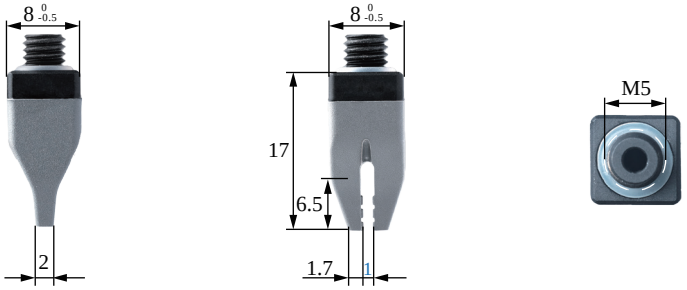

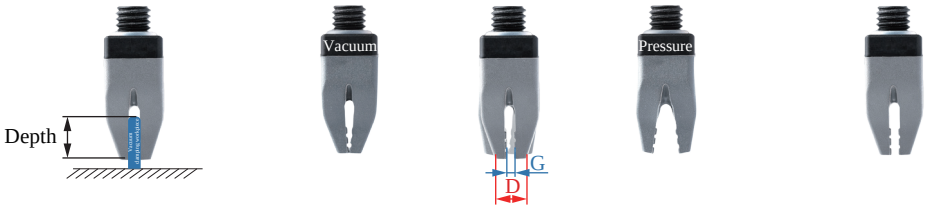

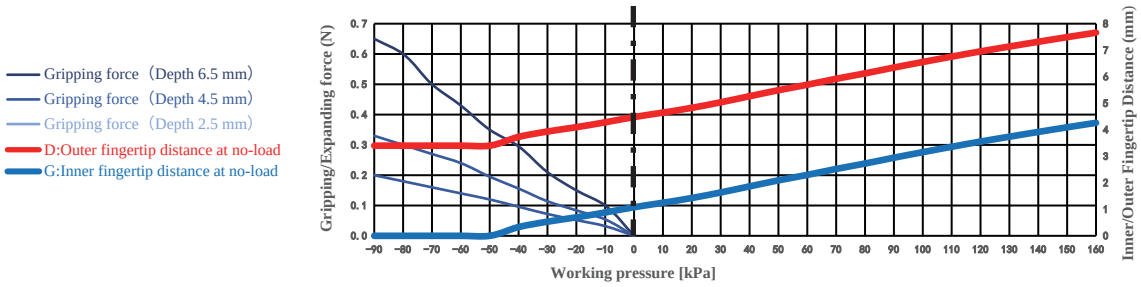

The clamping/inner-supporting force data of this product are measured based on the ideal workpiece size.
When the workpiece size deviates from the ideal value, the clamping/inner-supporting force decreases linearly.
If the workpiece size exceeds the clamping range or inner-supporting range, the clamping/inner-supporting force drops to 0.

Paremeter

Gripping range	0-2.5mm	Gripping force	0-0.7N	Theoretical gripping load**	0-26g	Ideal gripping workpiece size*	1mm
Internal gripping range	—	Internal gripping force	—	Theoretical internal gripping load**	—	Ideal internal gripping workpiece size*	—
Joint size	M5	Life time***	1.5 million times	Contact Temperature	<220℃	Safe pressure***	<160kPa

*: The width of the cuboid that generates the maximum gripping force (two-finger gripping), the outer diameter of the cylinder (multi-finger gripping), the width of the square hole (two-finger internal gripping), or the inner diameter of the circular hole (multi-finger internal gripping);
**: Only the theoretical load of the ideal workpiece under standard working conditions is marked for reference and comparison. The real load capacity is also affected by factors such as the surface structure and roughness of the workpiece. Please take the measured data as the standard;
***: The working air pressure and the surface roughness of the workpiece in the usage scenario may have different degrees of impact on the life-time. Please configure Rochu control Unit. Do not exceed the safe air pressure.

DAC Straight Fitting Installation

Scan to watch videos

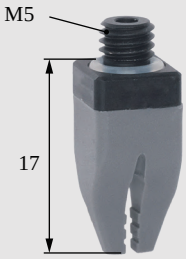

DAL Side Fitting Installation

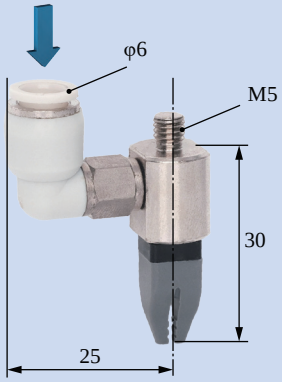

Scara Robotic Arm Installation

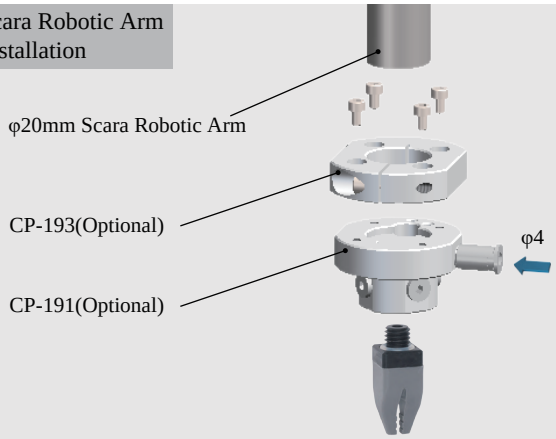

Robotic Arm Flange Side Fitting Installation

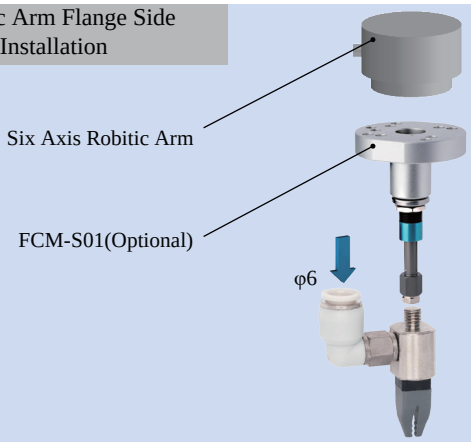

Rigid Connection Installation

Buffer Installation

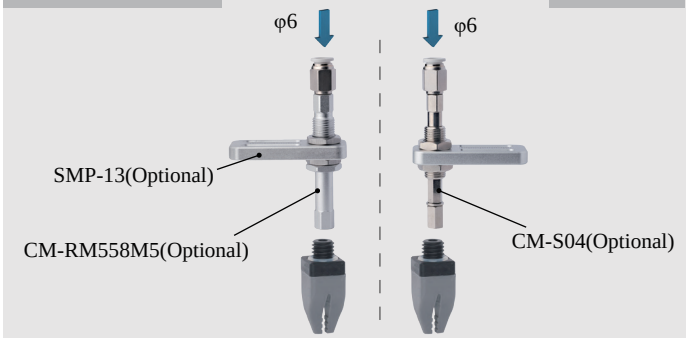

Matrix Installation

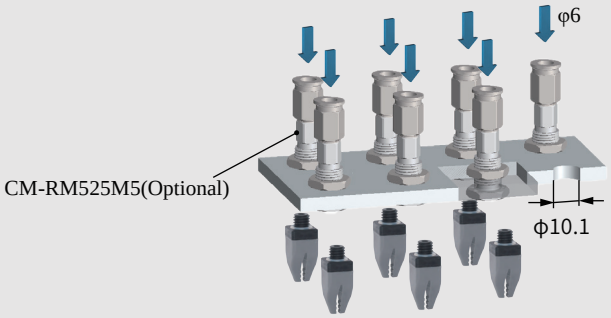

Precise Positioning Installation

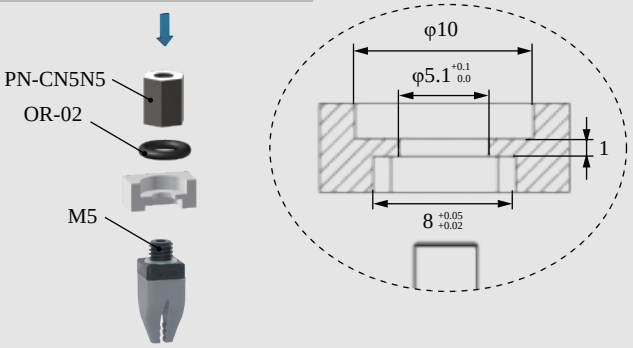

Installation of Optical Fiber Sensors

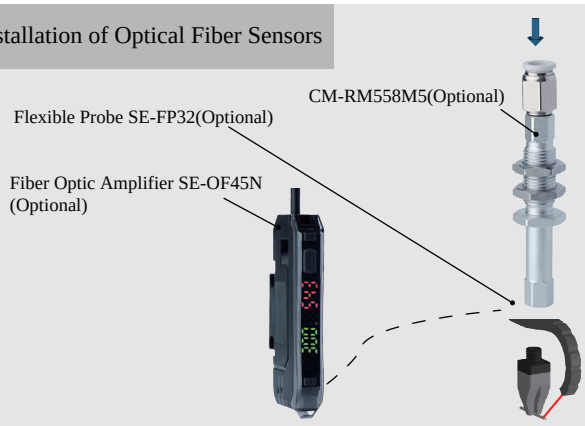

DAC-2D08[H]/S Direct-through H Type		DAL-2D08[H]/S Side-through H Type	
DAC-2D08[HAS]/S Direct-through Dust-free H Type		DAL-2D08[HAS]/S Side-through Dust-free H Type	
Weight	0.8g	**Weight**	15.9g

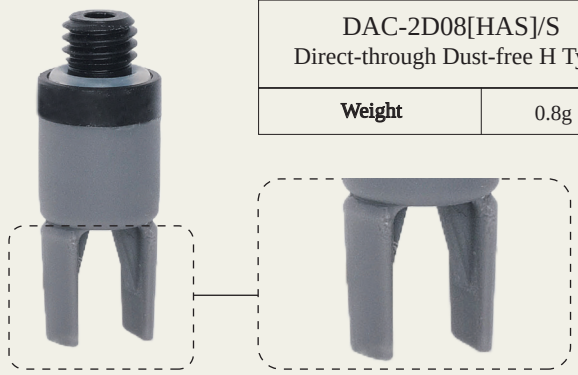



Product features

- Fingertip open under pressure and clamped in a vacuum. Fingertip distance G can be adjusted by working pressure.It is suggested to be used with Rochu control unit.
- Soft beak material is divided into Normal Material [H] and Dust-free Normal Material [HAS]. When the workpiece is light, or very soft, easy to adhere to adsorp on the soft beak, Dust-free Normal Material [HAS] is preferred.
- Food-grade material, direct food contact approved.

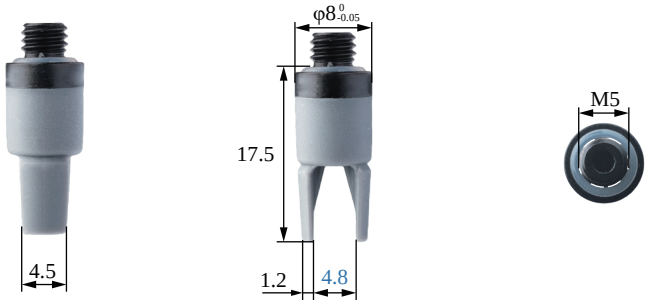

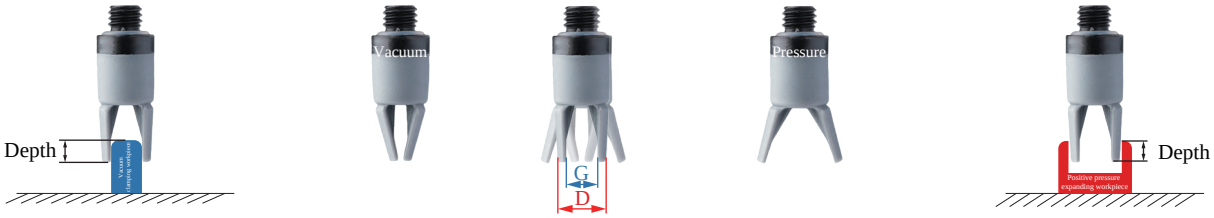

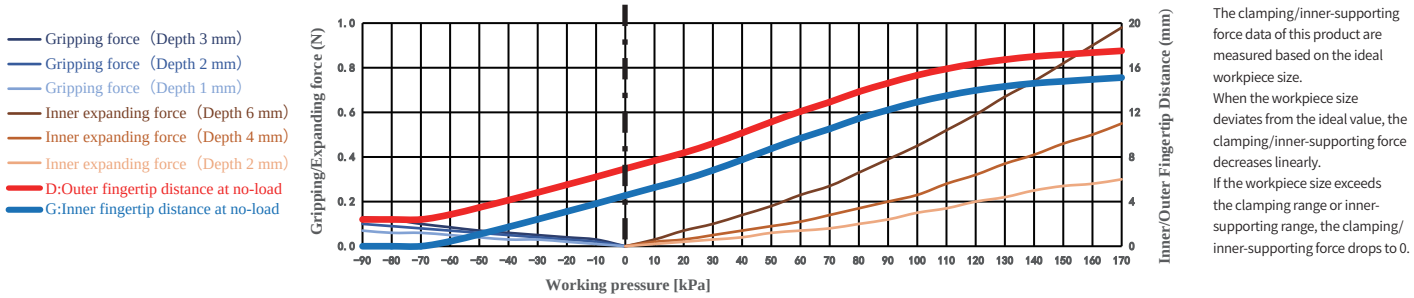

The clamping/inner-supporting force data of this product are measured based on the ideal workpiece size.
When the workpiece size deviates from the ideal value, the clamping/inner-supporting force decreases linearly.
If the workpiece size exceeds the clamping range or inner-supporting range, the clamping/inner-supporting force drops to 0.

Paremeter

Gripping range	3-5mm	Gripping force	0-0.1N	Theoretical gripping load**	0-5g	Ideal gripping workpiece size*	4mm
Internal gripping range	4-13mm	Internal gripping force	0-0.9N	Theoretical internal gripping load**	0-37g	Ideal internal gripping workpiece size*	7.2mm
Joint size	M5	Life time***	1.5 million times	Contact Temperature	<220℃	Safe pressure***	<170kPa

*: The width of the cuboid that generates the maximum gripping force (two-finger gripping), the outer diameter of the cylinder (multi-finger gripping), the width of the square hole (two-finger internal gripping), or the inner diameter of the circular hole (multi-finger internal gripping);
**: Only the theoretical load of the ideal workpiece under standard working conditions is marked for reference and comparison. The real load capacity is also affected by factors such as the surface structure and roughness of the workpiece. Please take the measured data as the standard;
***: The working air pressure and the surface roughness of the workpiece in the usage scenario may have different degrees of impact on the life-time. Please configure Rochu control Unit. Do not exceed the safe air pressure.

DAC Straight Fitting Installation

Scan to watch videos



DAL Side Fitting Installation

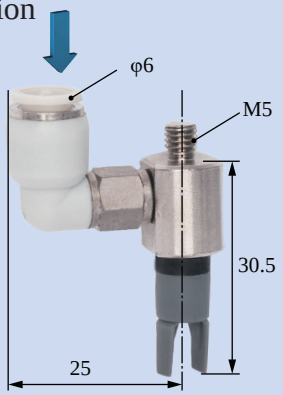

Scara Robotic Arm Installation

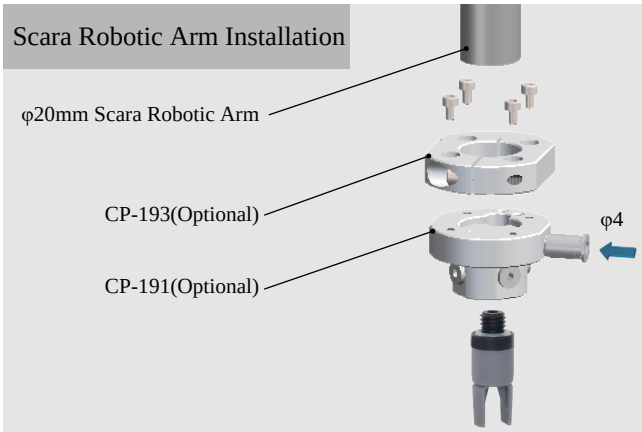

Robotic Arm Flange Side Fitting Installation

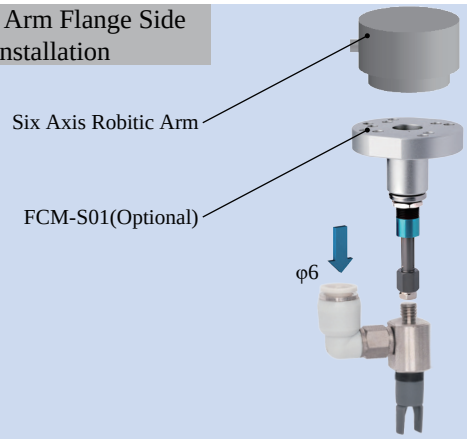

Rigid Connection Installation

Buffer Installation

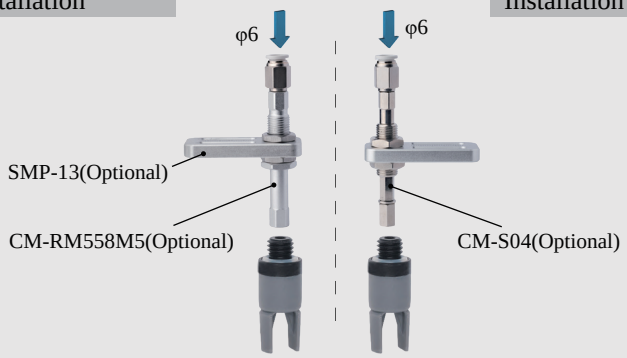

Matrix Installation

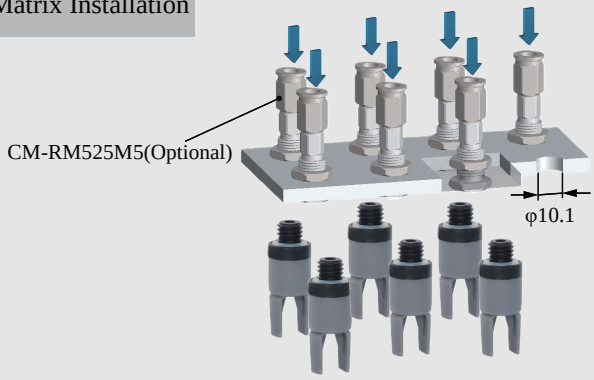

Precise Positioning Installation

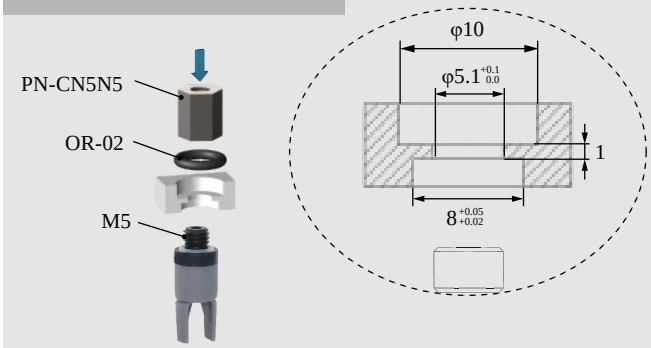

Installation of Optical Fiber Sensors

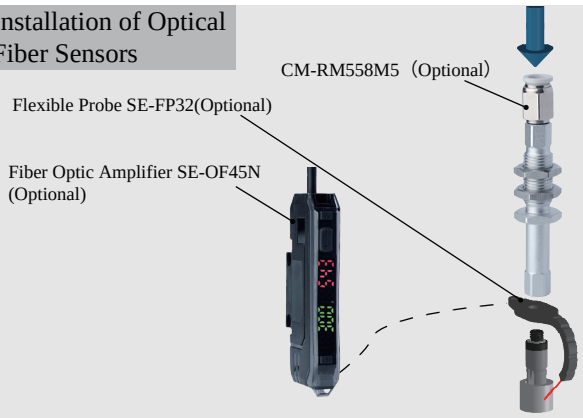

B-2D08[H]/S



DAC-2AN0201[LH]/S Direct-through LH Type	DAL-2AN0201[LH]/S Side-through LH Type
DAC-2AN0201[LHAS]/S Direct-through Anti-static Dust-free P Type	DAL-2AN0201[LHAS]/S Side-through Anti-static Dust-free P Type



Weight	1.1g	Weight	15.3g

- Fingertip open under pressure and clamped in a vacuum. Fingertip distance G can be adjusted by working pressure.It is suggested to be used with Rochu control unit.
- Soft beak material is divided into Normal Material [LH] and Dust-free Normal Material [LHAS]. When the workpiece is light, or very soft, easy to adhere to adsorp on the soft beak, Dust-free Normal Material [LHAS] is preferred.

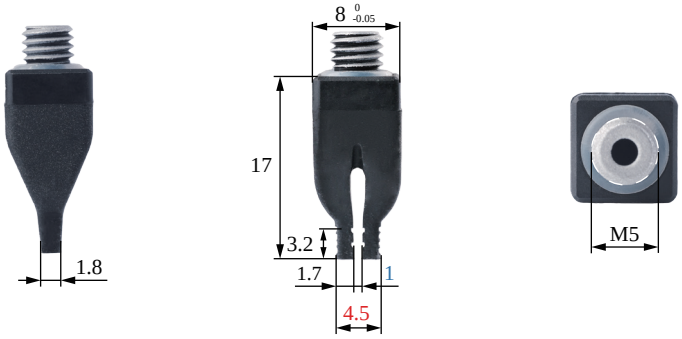



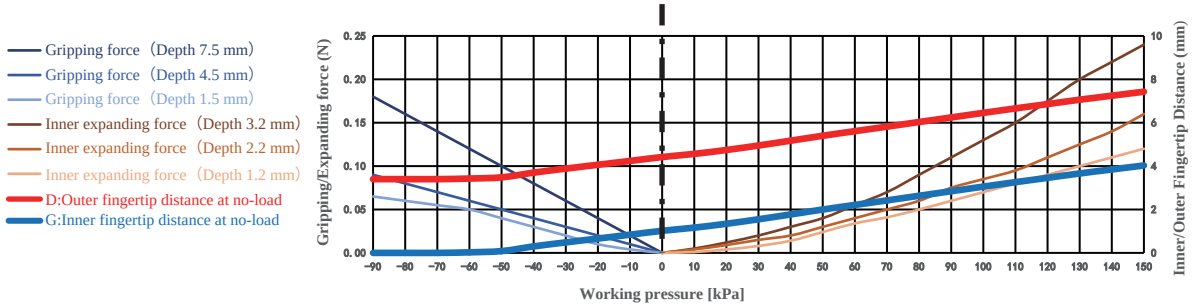

Gripping range	0-3mm	Gripping force	0-0.2N	Theoretical gripping load**	0-7g	Ideal gripping workpiece size*	1mm
Internal gripping range	3-8mm	Internal gripping force	0-0.2N	Theoretical internal gripping load**	0-10g	Ideal internal gripping workpiece size*	4mm
Joint size	M5	Life time***	1.5 million times	Contact Temperature	<220°C	Safe pressure***	<150kPa

DAC Straight Fitting Installation

Scan to watch videos



DAL Side Fitting Installation

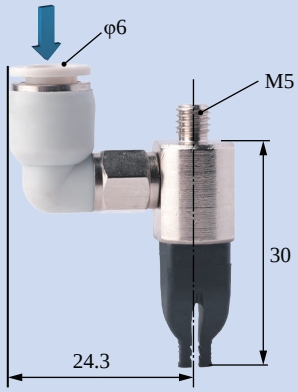

Scara Robotic Arm Installation

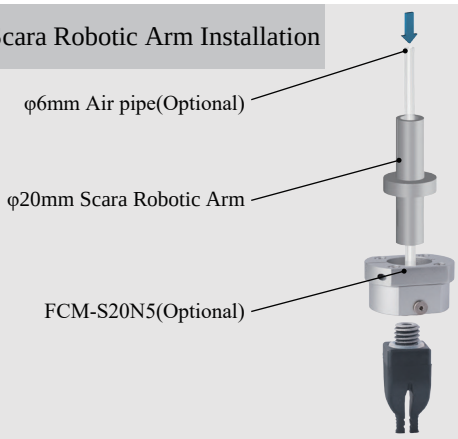

Robotic Arm Flange Side Fitting Installation

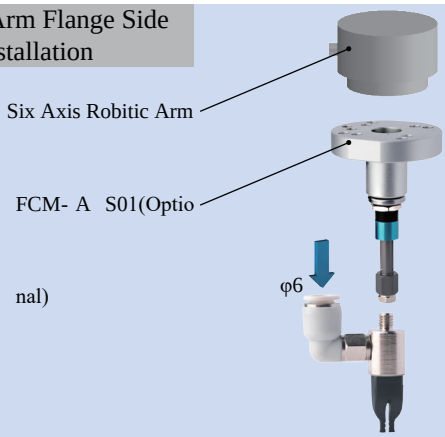

Rigid Connection Installation

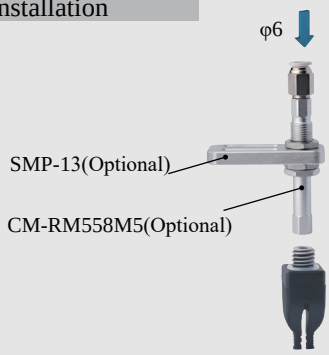

Buffer Installation



Matrix Installation

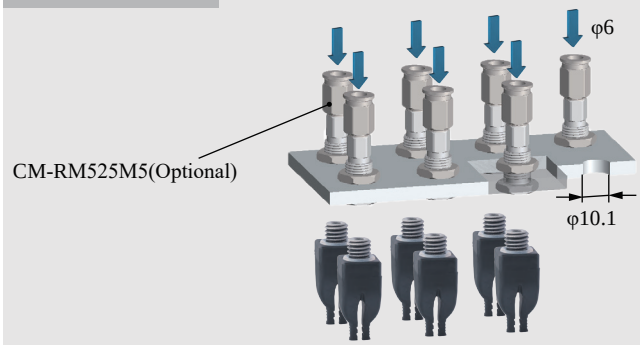

Precise Positioning Installation

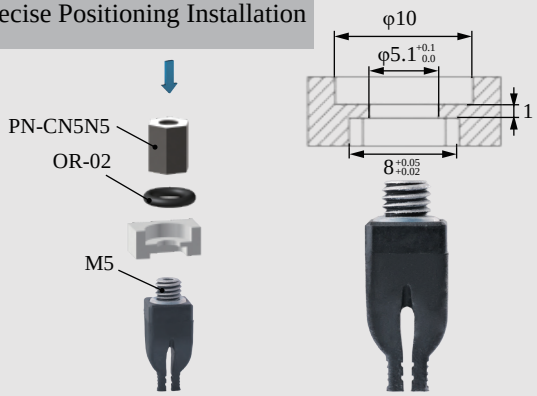

Installation of Optical Fiber Sensors

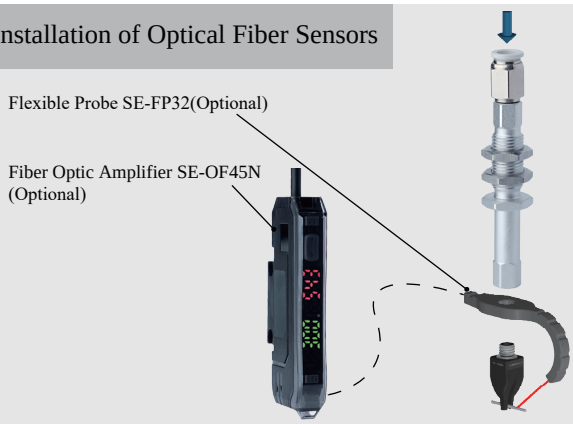



DAC-2A0D601[LH]/S Direct-through LH Type		DAL-2A0D601[LH]/S Side-through LH Type	
DAC-2A0D601[LHAS]/S Direct-through Anti-static Dust-free P Type		DAL-2A0D601[LHAS]/S Side-through Anti-static Dust-free P Type	
Weight	1.5g	**Weight**	15.4g



Product features

- Fingertip open under pressure and clamped in a vacuum. Fingertip distance G can be adjusted by working pressure.It is suggested to be used with Rochu control unit.
- Soft beak material is divided into Normal Material [LH] and Dust-free Normal Material [LHAS]. When the workpiece is light, or very soft, easy to adhere to adsorp on the soft beak, Dust-free Normal Material [LHAS] is preferred.

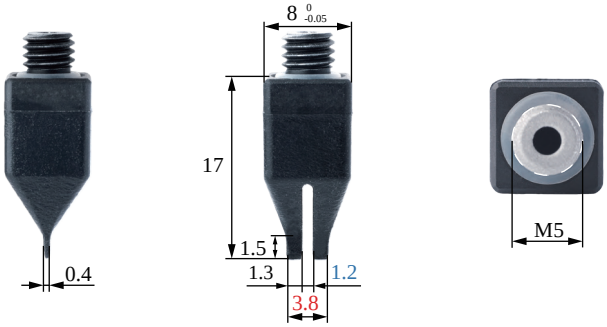



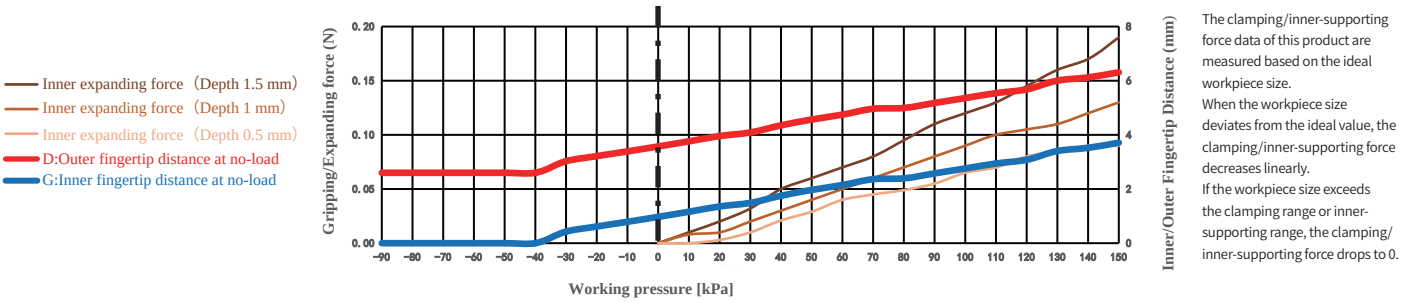

The clamping/inner-supporting force data of this product are measured based on the ideal workpiece size.
When the workpiece size deviates from the ideal value, the clamping/inner-supporting force decreases linearly.
If the workpiece size exceeds the clamping range or inner-supporting range, the clamping/inner-supporting force drops to 0.

Paremeter

Gripping range	——	Gripping force	——	Theoretical gripping load**	——	Ideal gripping workpiece size*	——
Internal gripping range	3-6mm	Internal gripping force	0-0.2N	Theoretical internal gripping load**	0-8g	Ideal internal gripping workpiece size*	4mm
Joint size	M5	Life time***	1.5 million times	Contact Temperature	<220°C	Safe pressure***	<150kPa

*: The width of the cuboid that generates the maximum gripping force (two-finger gripping), the outer diameter of the cylinder (multi-finger gripping), the width of the square hole (two-finger internal gripping), or the inner diameter of the circular hole (multi-finger internal gripping);
**: Only the theoretical load of the ideal workpiece under standard working conditions is marked for reference and comparison. The real load capacity is also affected by factors such as the surface structure and roughness of the workpiece. Please take the measured data as the standard;
***: The working air pressure and the surface roughness of the workpiece in the usage scenario may have different degrees of impact on the life-time. Please configure Rochu control Unit. Do not exceed the safe air pressure.

DAC Straight Fitting Installation



DAL Side Fitting Installation

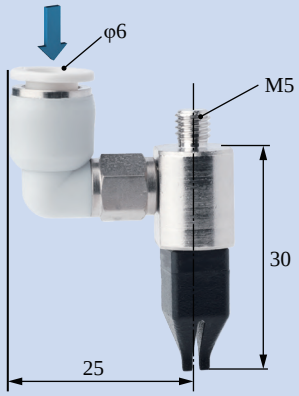

Scara Robotic Arm Installation

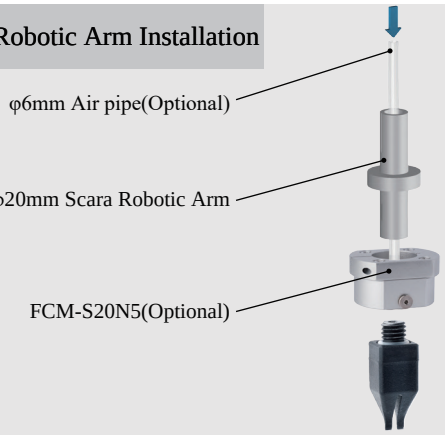

Robotic Arm Flange Side Fitting Installation

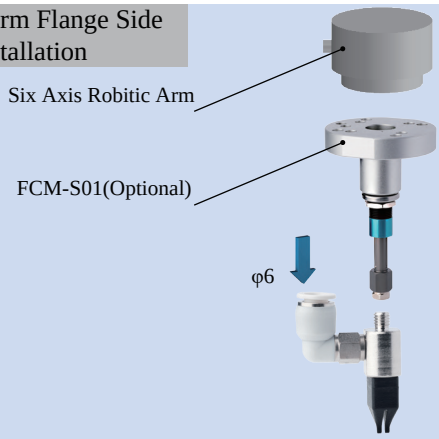

Rigid Connection Installation



Buffer Installation

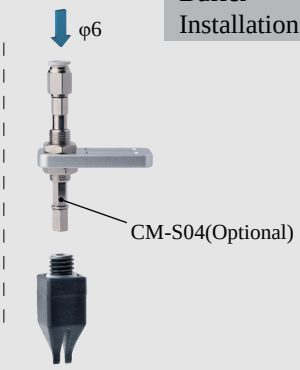

Matrix Installation

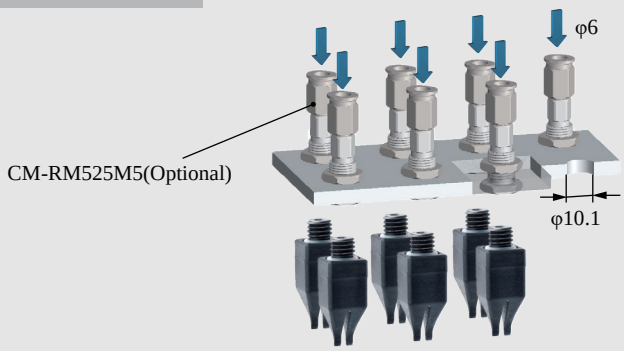

Precise Positioning Installation

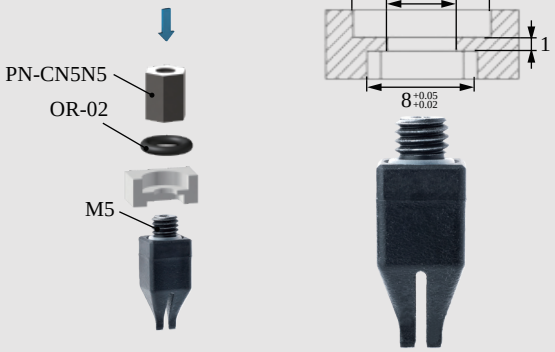

Installation of Optical Fiber Sensors

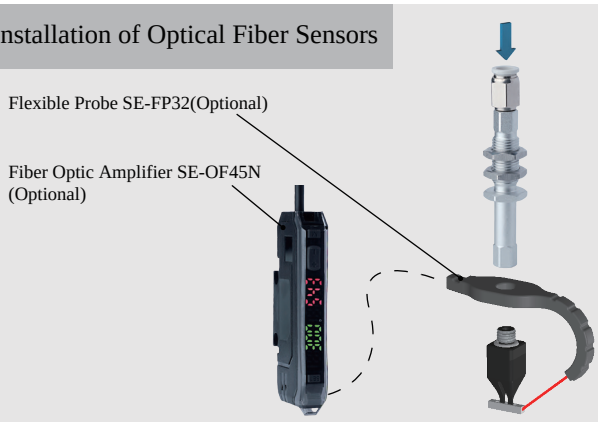



DAC-2051D5[P]/S Direct-through P Type		DAL-2051D5[P]/S Side-through P Type	
DAC-2051D5[PAS]/S Direct-through Dust-free P Type		DAL-2051D5[PAS]/S Side-through Dust-free P Type	
Weight	3.9g	**Weight**	15.4g



Product features

- Fingertip open under pressure and clamped in a vacuum. Fingertip distance G can be adjusted by working pressure.It is suggested to be used with Rochu control unit.
- Soft beak material is divided into Normal Material [P] and Dust-free Normal Material [PAS]. When the workpiece is light, or very soft, easy to adhere to adsorp on the soft beak, Dust-free Normal Material [PAS] is preferred.
- Food-grade material, direct food contact approved.

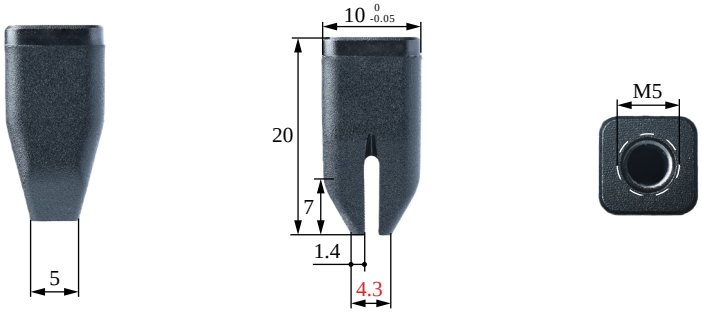

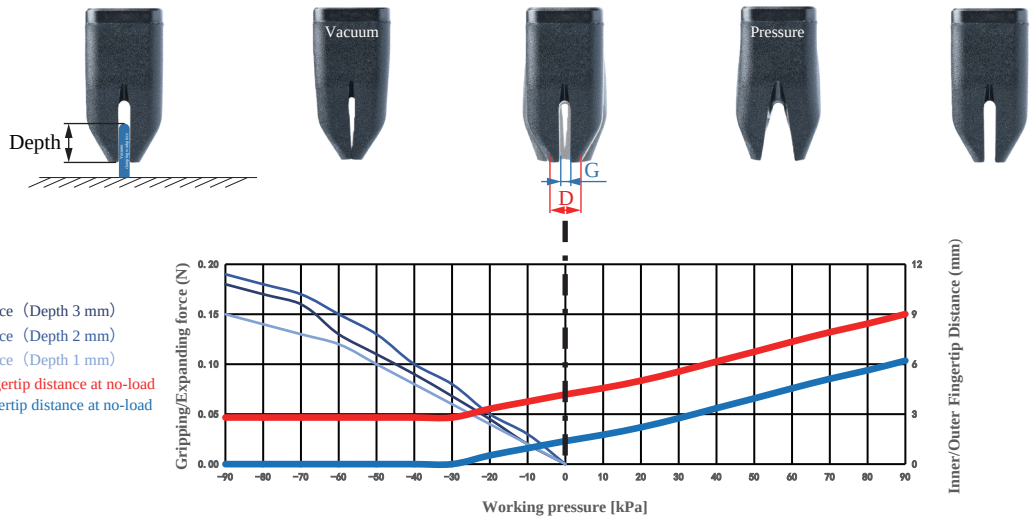

The clamping/inner-supporting force data of this product are measured based on the ideal workpiece size.
When the workpiece size deviates from the ideal value, the clamping/inner-supporting force decreases linearly.
If the workpiece size exceeds the clamping range or inner-supporting range, the clamping/inner-supporting force drops to 0.

Paremeter

Gripping range	0-3mm	Gripping force	0-0.2N	Theoretical gripping load**	0-8g	Ideal gripping workpiece size*	1.5mm
Internal gripping range	—	Internal gripping force	—	Theoretical internal gripping load**	—	Ideal internal gripping workpiece size*	—
Joint size	M5	Life time***	1.5 million times	Contact Temperature	<220℃	Safe pressure***	<90kPa

*: The width of the cuboid that generates the maximum gripping force (two-finger gripping), the outer diameter of the cylinder (multi-finger gripping), the width of the square hole (two-finger internal gripping), or the inner diameter of the circular hole (multi-finger internal gripping);
**: Only the theoretical load of the ideal workpiece under standard working conditions is marked for reference and comparison. The real load capacity is also affected by factors such as the surface structure and roughness of the workpiece. Please take the measured data as the standard;
***: The working air pressure and the surface roughness of the workpiece in the usage scenario may have different degrees of impact on the life-time. Please configure Rochu control Unit. Do not exceed the safe air pressure.

DAC Straight Fitting Installation

Scan to watch videos



DAL Side Fitting Installation

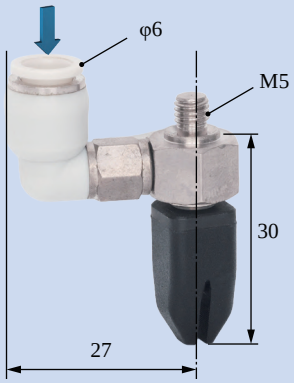

Scara Robotic Arm Installation

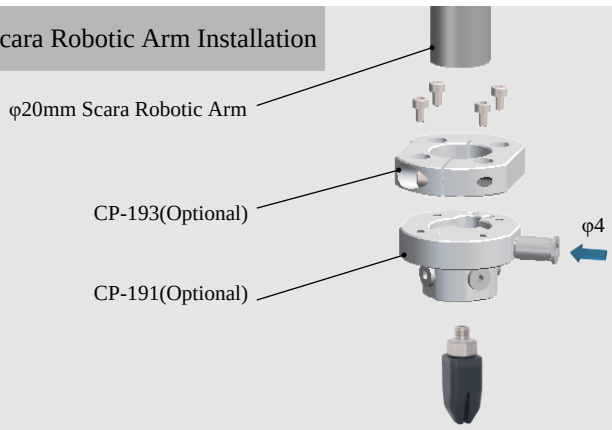

Robotic Arm Flange Side Fitting Installation

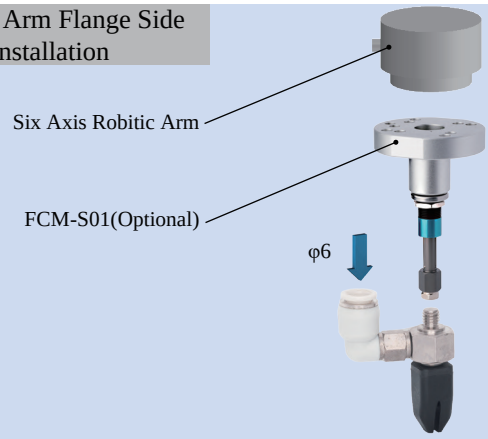

Rigid Connection Installation

Buffer Installation

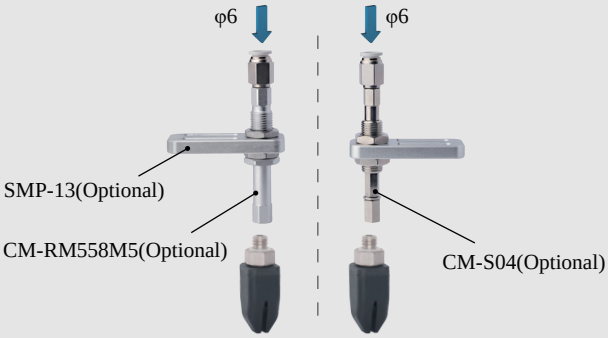

Matrix Installation

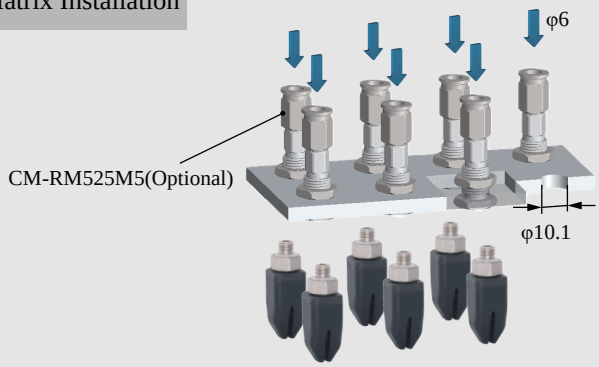

Precise Positioning Installation

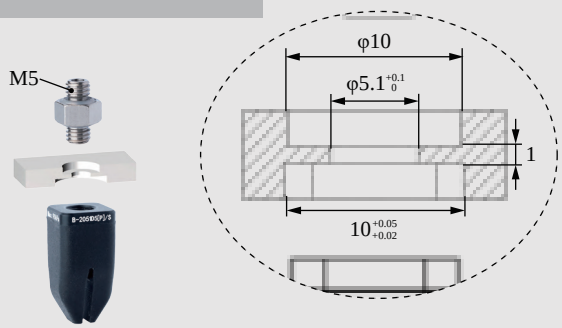

Installation of Optical Fiber Sensors





DAC-2051D5[LP]/S Direct-through Anti-static P Type		DAL-2051D5[LP]/S Side-through P Type	
DAC-2051D5[LPAS]/S Direct-through Anti-static Dust-free P Type		DAL-2051D5[LPAS]/S Side-through Anti-static Dust-free P Type	
Weight	3.9g	**Weight**	15.4g



Product features

- Fingertips open under pressure state and clamp in a vacuum. Inner fingertips distance G and outer fingertips distance D can be adjusted by working pressure.It is suggested to be used with Rochu control unit.
- The Anti-static material meets the requirements of the national standard GB/T11210-2014, with a point-to-point resistance of 0.1-1000MΩ. The Anti-static Dust-free type [LHAS] is more suitable for dealing with workpieces that have dustproof requirements or are miniature and lightweight.

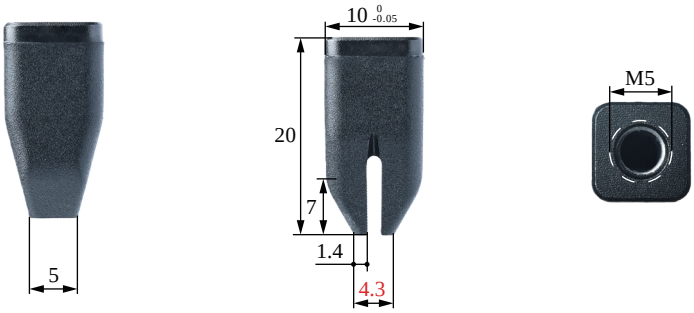

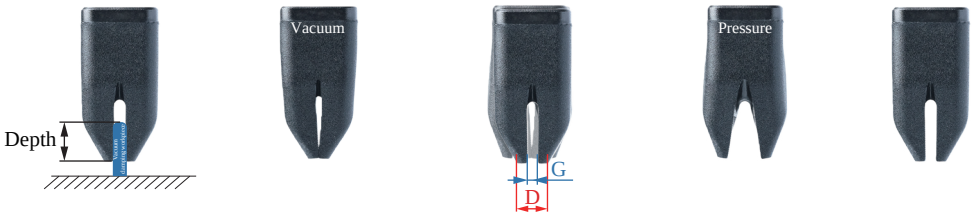

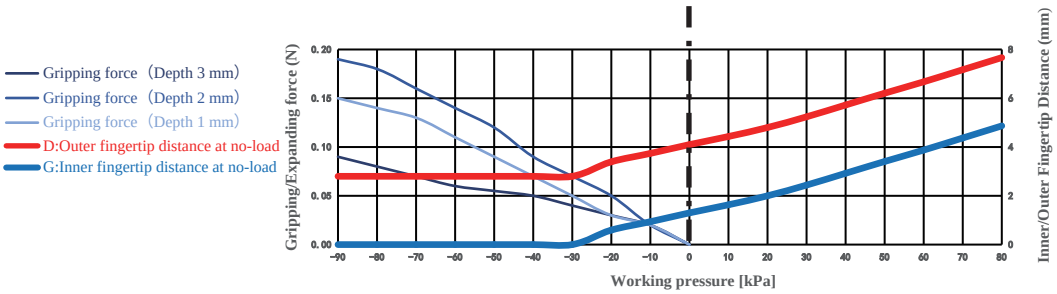

The clamping/inner-supporting force data of this product are measured based on the ideal workpiece size.
When the workpiece size deviates from the ideal value, the clamping/inner-supporting force decreases linearly.
If the workpiece size exceeds the clamping range or inner-supporting range, the clamping/inner-supporting force drops to 0.

Paremeter

Gripping range	0-3mm	Gripping force	0-0.2N	Theoretical gripping load**	0-8g	Ideal gripping workpiece size*	1.5mm
Internal gripping range	—	Internal gripping force	—	Theoretical internal gripping load**	—	Ideal internal gripping workpiece size*	—
Joint size	M5	Life time***	1.5 million times	Contact Temperature	<220℃	Safe pressure***	<80kPa

*: The width of the cuboid that generates the maximum gripping force (two-finger gripping), the outer diameter of the cylinder (multi-finger gripping), the width of the square hole (two-finger internal gripping), or the inner diameter of the circular hole (multi-finger internal gripping);
**: Only the theoretical load of the ideal workpiece under standard working conditions is marked for reference and comparison. The real load capacity is also affected by factors such as the surface structure and roughness of the workpiece. Please take the measured data as the standard;
***: The working air pressure and the surface roughness of the workpiece in the usage scenario may have different degrees of impact on the life-time. Please configure Rochu control Unit. Do not exceed the safe air pressure.

DAC Straight Fitting Installation

Scan to watch videos



DAL Side Fitting Installation

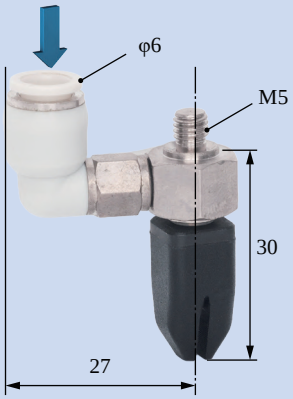

Scara Robotic Arm Installation

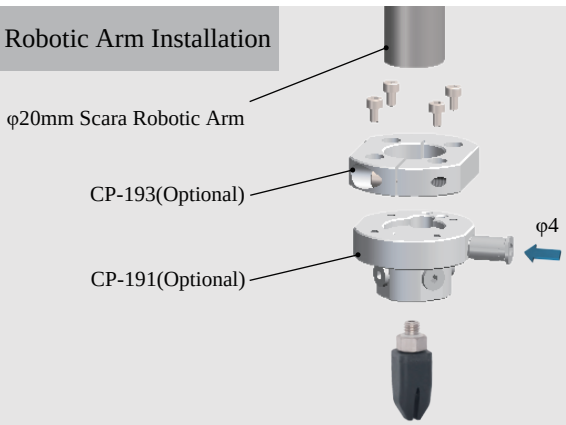

Robotic Arm Flange Side Fitting Installation

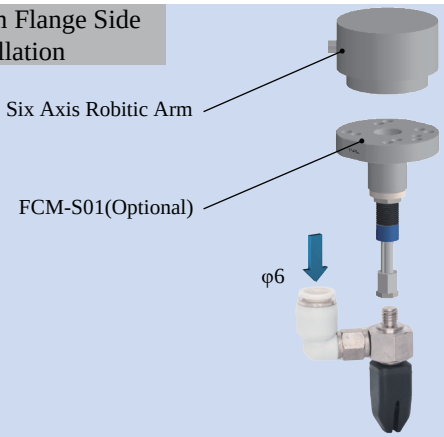

Rigid Connection Installation

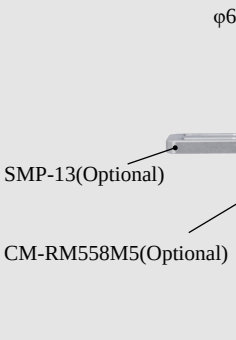

Buffer Installation



Matrix Installation

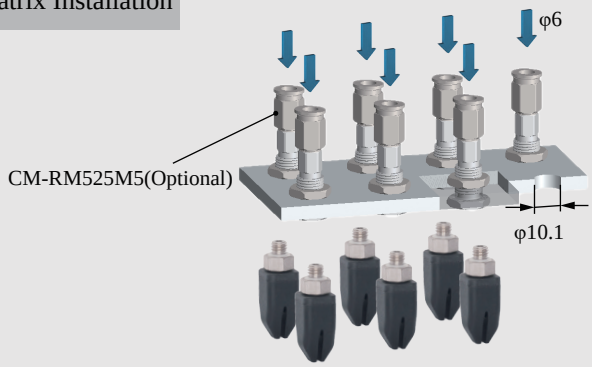

Precise Positioning Installation

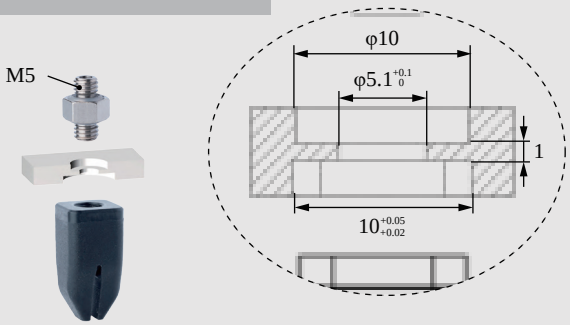

Installation of Optical Fiber Sensors





DAC-2CN033D5[H]/S Direct-through H Type		DAL-2CN033D5[H]/S Side-through H Type	
DAC-2CN033D5[HAS]/S Direct-through Dust-free H Type		DAL-2CN033D5[HAS]/S Side-through Dust-free H Type	
Weight	5.1g	Weight	16.3g



- Fingertip open under pressure and clamped in a vacuum. Fingertip distance G can be adjusted by working pressure.It is suggested to be used with Rochu control unit.
- Soft beak material is divided into Normal Material [H] and Dust-free Normal Material [HAS]. When the workpiece is light, or very soft, easy to adhere to adsorp on the soft beak, Dust-free Normal Material [HAS] is preferred.
- Food-grade material, direct food contact approved.

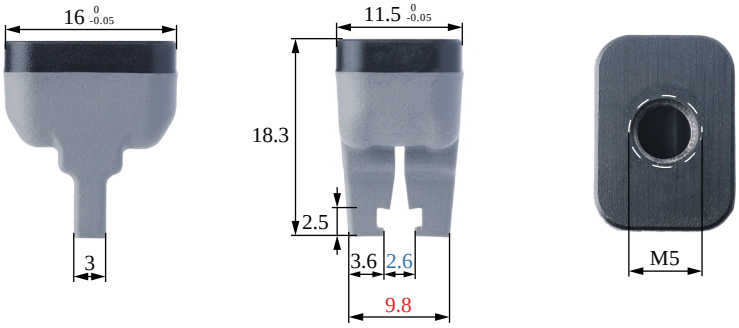

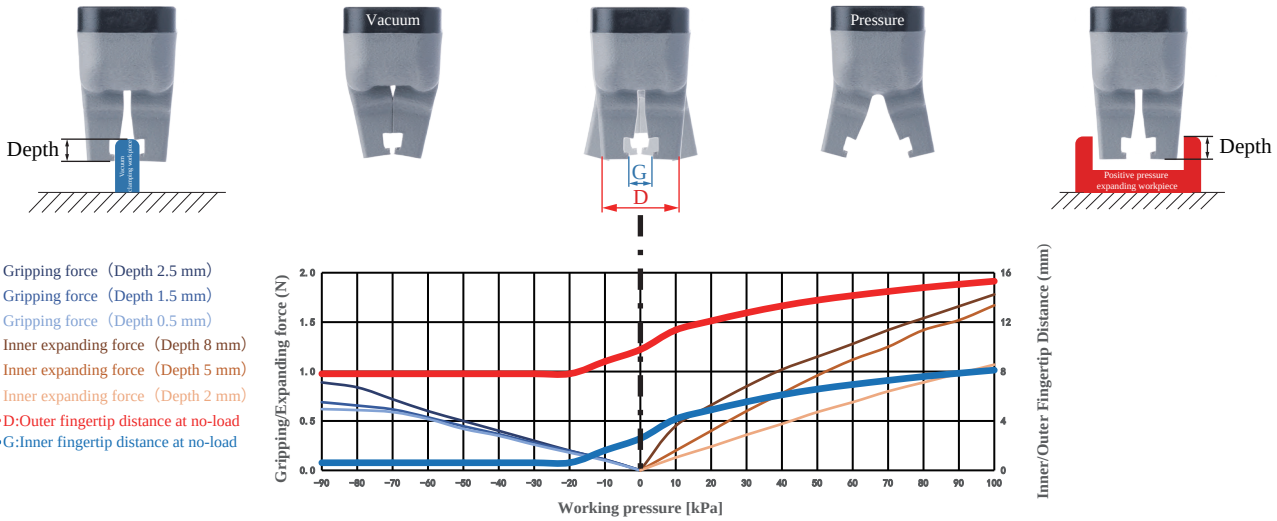

Gripping range	3-7mm	Gripping force	0-0.9N	Theoretical gripping load**	0-36g	Ideal gripping workpiece size*	5mm
Internal gripping range	—	Internal gripping force	0-1.9N	Theoretical internal gripping load**	0-71g	Ideal internal gripping workpiece size*	—
Joint size	M5	Life time***	1.5 million times	Contact Temperature	<220°C	Safe pressure***	<100kPa

DAC Straight Fitting Installation

Scan to watch videos



DAL Side Fitting Installation

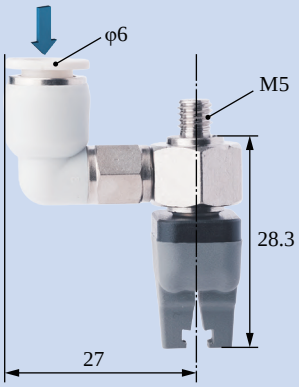

Scara Robotic Arm Installation

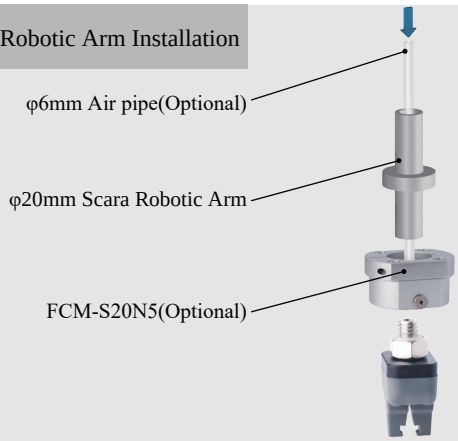

Robotic Arm Flange Side Fitting Installation

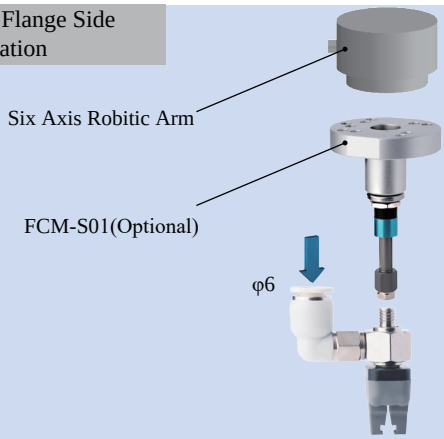

Rigid Connection Installation

Buffer Installation

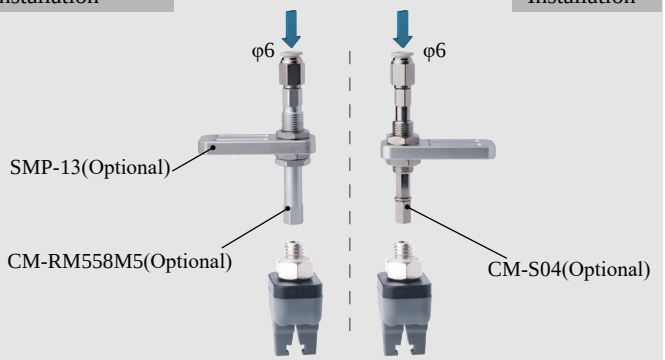

Matrix Installation



Precise Positioning Installation

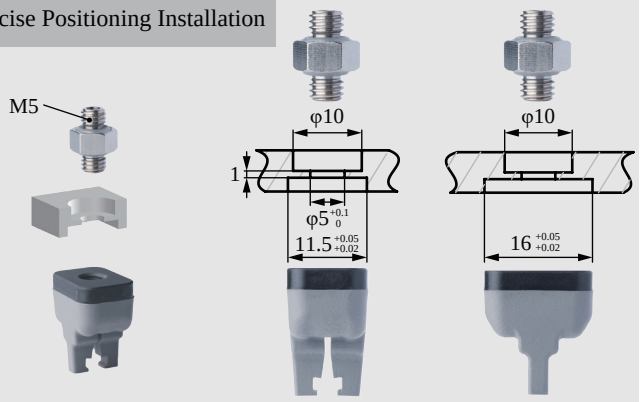

Installation of Optical Fiber Sensors



	DAC-2CN063D5[H]/S Direct-through H Type		DAL-2CN063D5[H]/S Side-through H Type		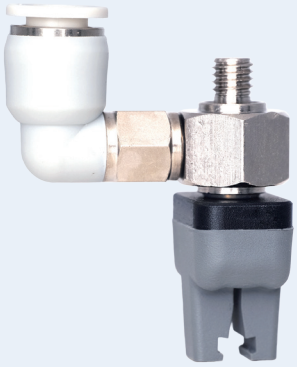
	DAC-2CN063D5[HAS]/S Direct-through Dust-free H Type		DAL-2CN063D5[HAS]/S Side-through Dust-free H Type		
	Weight	5.2g	Weight	16.4g	

- Fingertip open under pressure and clamped in a vacuum. Fingertip distance G can be adjusted by working pressure.It is suggested to be used with Rochu control unit.
- Soft beak material is divided into Normal Material [H] and Dust-free Normal Material [HAS]. When the workpiece is light, or very soft, easy to adhere to adsorp on the soft beak, Dust-free Normal Material [HAS] is preferred.
- Food-grade material, direct food contact approved.

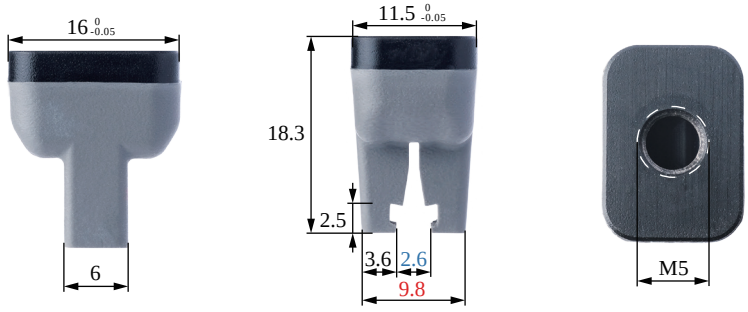

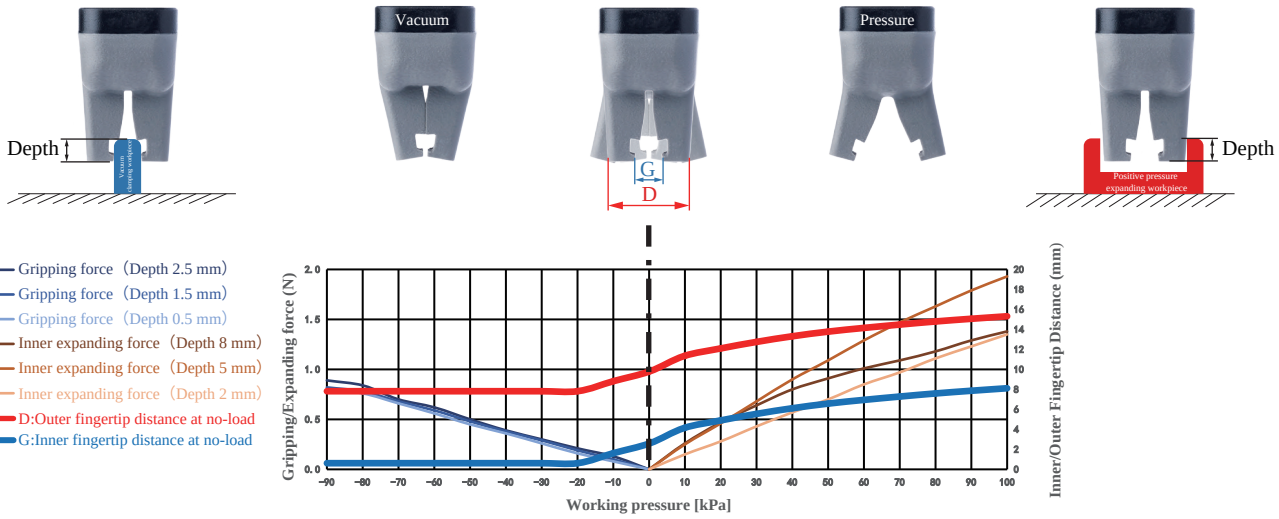

Gripping range	3-7mm	Gripping force	0-0.9N	Theoretical gripping load**	0-36g	Ideal gripping workpiece size*	5mm
Internal gripping range	—	Internal gripping force	0-1N	Theoretical internal gripping load**	0-39g	Ideal internal gripping workpiece size*	—
Joint size	M5	Life time***	1.5 million times	Contact Temperature	<220°C	Safe pressure***	<100kPa

DAC Straight Fitting Installation

Scan to watch videos



DAL Side Fitting Installation

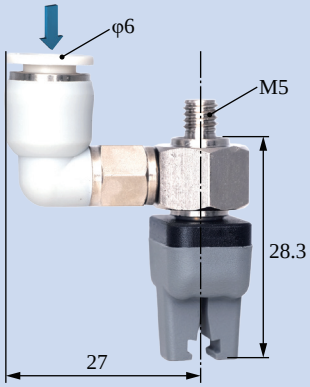

Scara Robotic Arm Installation

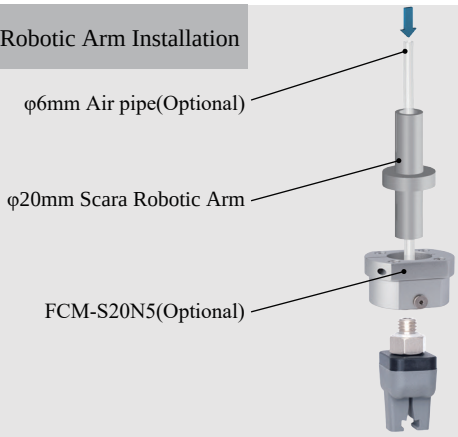

Robotic Arm Flange Side Fitting Installation

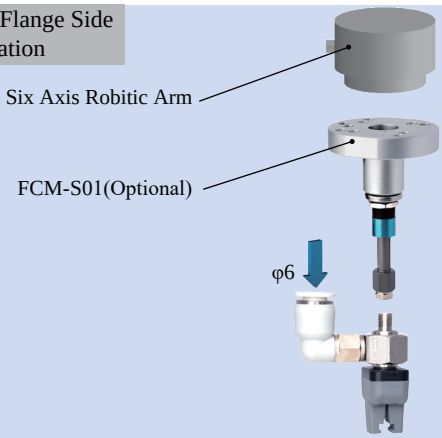

Rigid Connection Installation

Buffer Installation

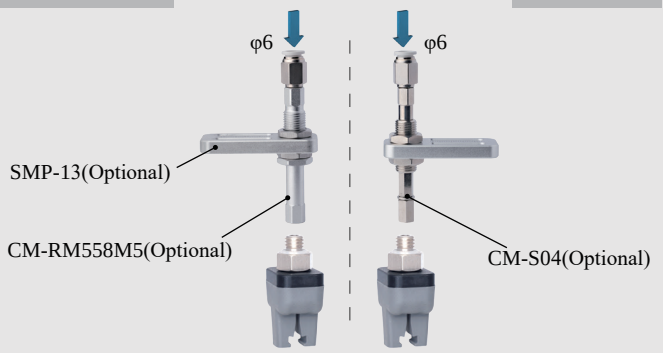

Matrix Installation

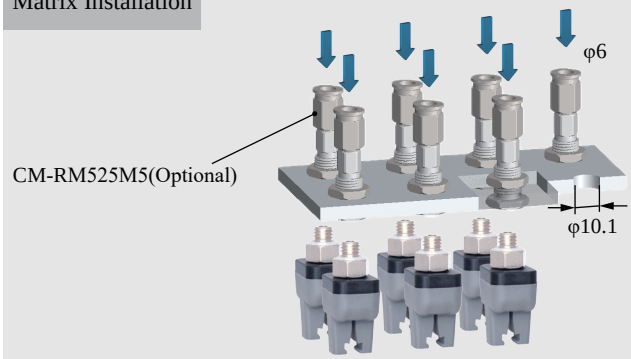

Precise Positioning Installation

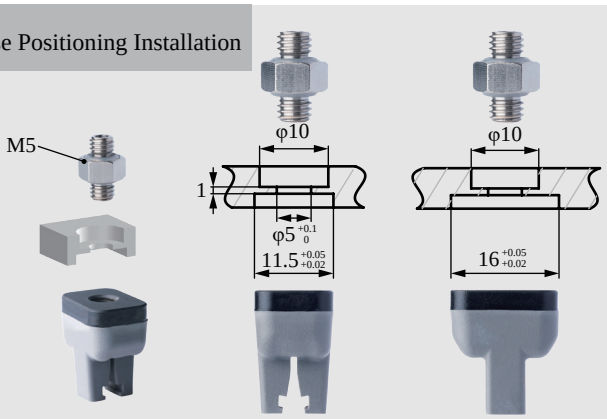

Installation of Optical Fiber Sensors



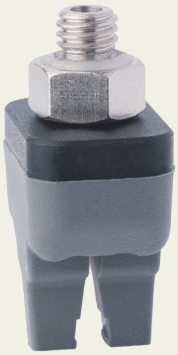

DAC-2DN033D5[H]/S Direct-through H Type	DAL-2DN033D5[H]/S Side-through H Type
DAC-2DN033D5[HAS]/S Direct-through Dust-free H Type	DAL-2DN033D5[HAS]/S Side-through Dust-free H Type
Weight 5.1g	**Weight** 16.3g



Product features

- Fingertip open under pressure and clamped in a vacuum. Fingertip distance G can be adjusted by working pressure.It is suggested to be used with Rochu control unit.
- Soft beak material is divided into Normal Material [H] and Dust-free Normal Material [HAS]. When the workpiece is light, or very soft, easy to adhere to adsorp on the soft beak, Dust-free Normal Material [HAS] is preferred.
- Food-grade material, direct food contact approved.

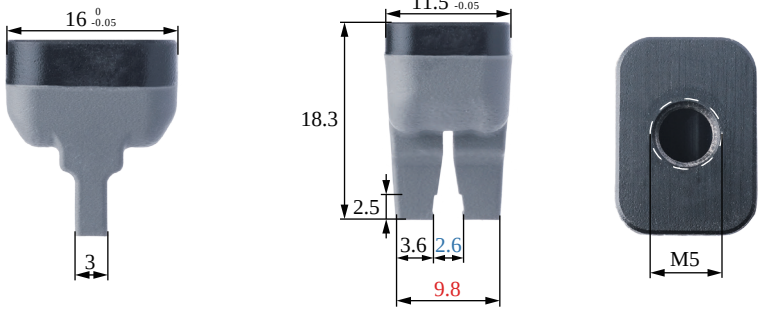

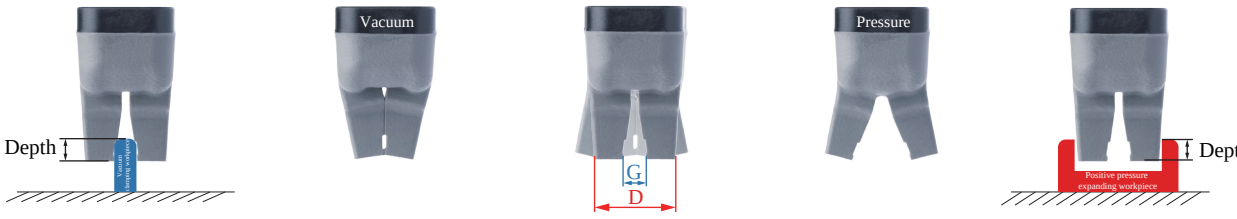

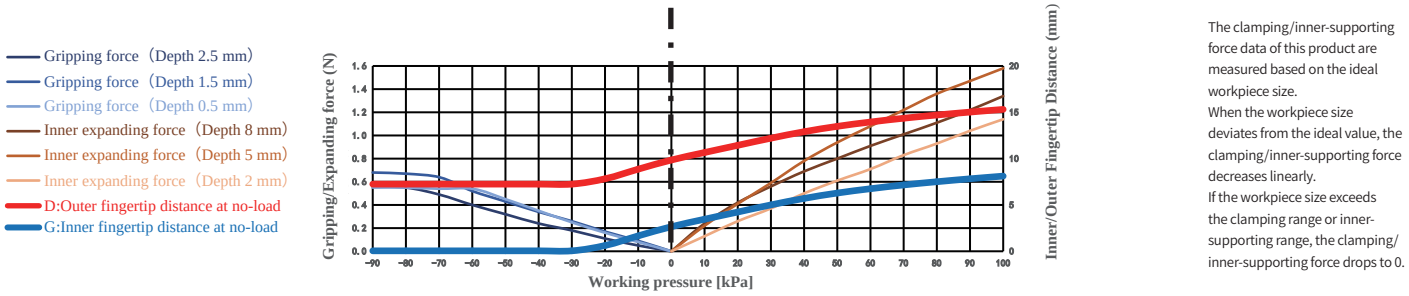

The clamping/inner-supporting force data of this product are measured based on the ideal workpiece size.
When the workpiece size deviates from the ideal value, the clamping/inner-supporting force decreases linearly.
If the workpiece size exceeds the clamping range or inner-supporting range, the clamping/inner-supporting force drops to 0.

Paremeter

Gripping range	1-6mm	Gripping force	0-0.7N	Theoretical gripping load**	0-27g	Ideal gripping workpiece size*	3mm
Internal gripping range	—	Internal gripping force	0-1.6N	Theoretical internal gripping load**	0-63g	Ideal internal gripping workpiece size*	—
Joint size	M5	Life time***	1.5 million times	Contact Temperature	<220°C	Safe pressure***	<100kPa

*: The width of the cuboid that generates the maximum gripping force (two-finger gripping), the outer diameter of the cylinder (multi-finger gripping), the width of the square hole (two-finger internal gripping), or the inner diameter of the circular hole (multi-finger internal gripping);
**: Only the theoretical load of the ideal workpiece under standard working conditions is marked for reference and comparison. The real load capacity is also affected by factors such as the surface structure and roughness of the workpiece. Please take the measured data as the standard;
***: The working air pressure and the surface roughness of the workpiece in the usage scenario may have different degrees of impact on the life-time. Please configure Rochu control Unit. Do not exceed the safe air pressure.

DAC Straight Fitting Installation

Scan to watch videos

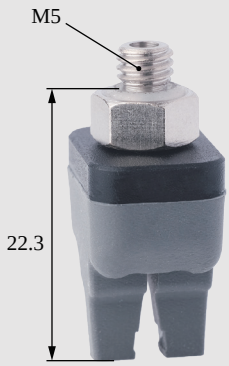

DAL Side Fitting Installation

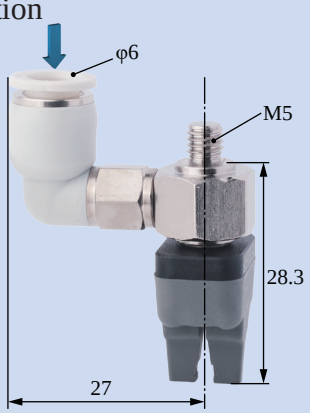

Scara Robotic Arm Installation

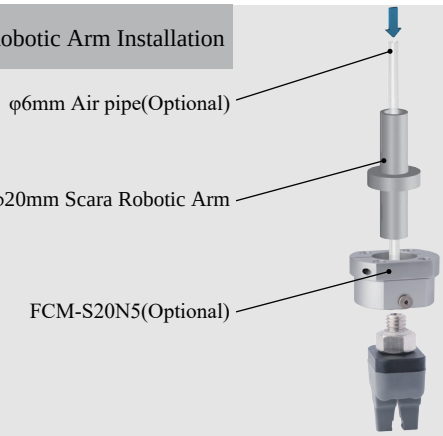

Robotic Arm Flange Side Fitting Installation

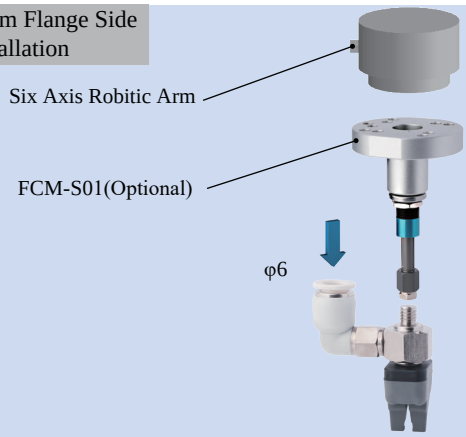

Rigid Connection Installation

Buffer Installation

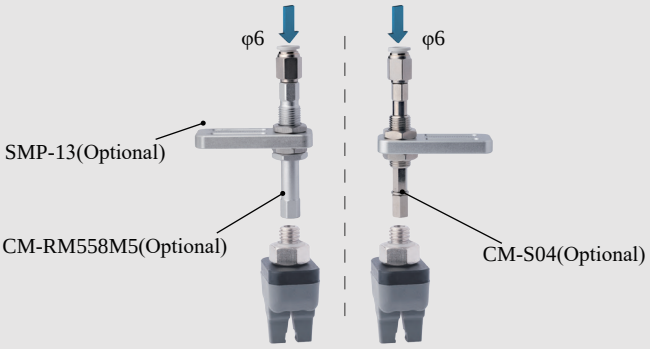

Matrix Installation

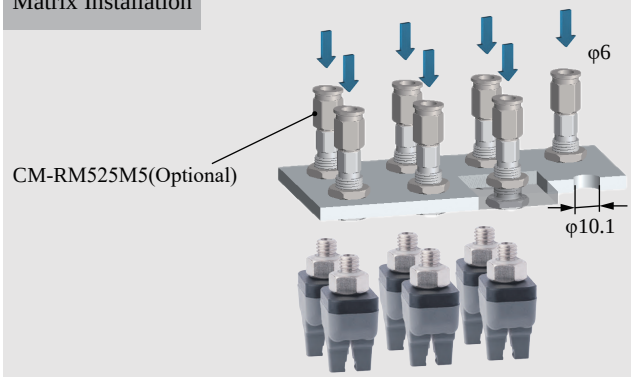

Precise Positioning Installation

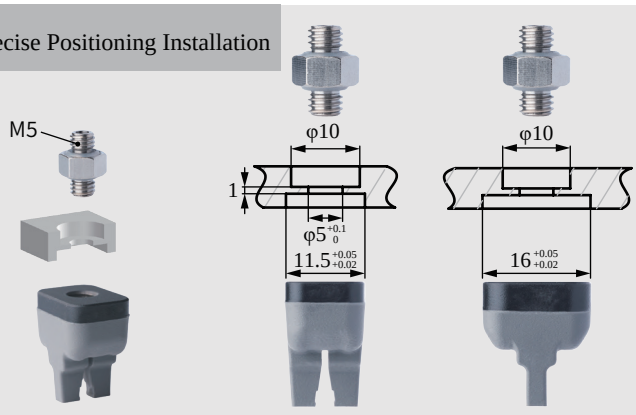

Installation of Optical Fiber Sensors





DAC-2DN063D5[H]/S Direct-through H Type		DAL-2DN063D5[H]/S Side-through H Type	
DAC-2DN063D5[HAS]/S Direct-through Dust-free H Type		DAL-2DN063D5[HAS]/S Side-through Dust-free H Type	
Weight	5.2g	**Weight**	16.4g



Product features

- Fingertip open under pressure and clamped in a vacuum. Fingertip distance G can be adjusted by working pressure.It is suggested to be used with Rochu control unit.
- Soft beak material is divided into Normal Material [H] and Dust-free Normal Material [HAS]. When the workpiece is light, or very soft, easy to adhere to adsorp on the soft beak, Dust-free Normal Material [HAS] is preferred.
- Food-grade material, direct food contact approved.

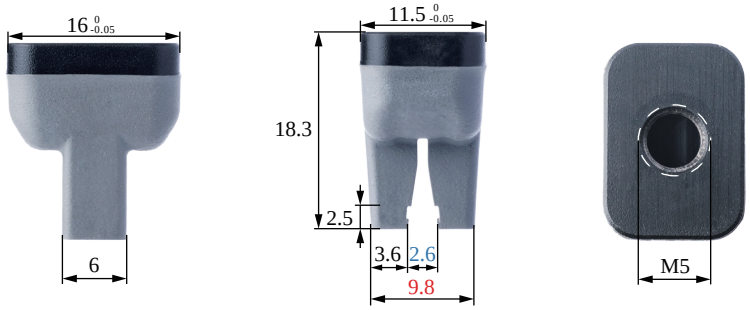

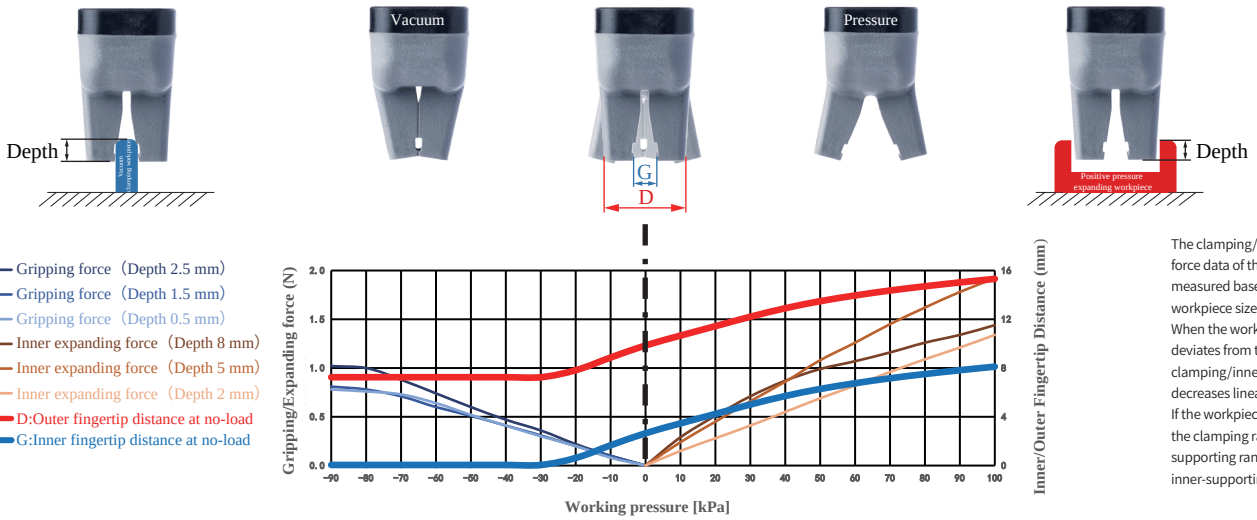

The clamping/inner-supporting force data of this product are measured based on the ideal workpiece size.
When the workpiece size deviates from the ideal value, the clamping/inner-supporting force decreases linearly.
If the workpiece size exceeds the clamping range or inner-supporting range, the clamping/inner-supporting force drops to 0.

Paremeter

Gripping range	1-6mm	Gripping force	0-1N	Theoretical gripping load**	0-41g	Ideal gripping workpiece size*	3mm
Internal gripping range	—	Internal gripping force	0-1.9N	Theoretical internal gripping load**	0-77g	Ideal internal gripping workpiece size*	—
Joint size	M5	Life time***	1.5 million times	Contact Temperature	<220°C	Safe pressure***	<100kPa

*: The width of the cuboid that generates the maximum gripping force (two-finger gripping), the outer diameter of the cylinder (multi-finger gripping), the width of the square hole (two-finger internal gripping), or the inner diameter of the circular hole (multi-finger internal gripping);
**: Only the theoretical load of the ideal workpiece under standard working conditions is marked for reference and comparison. The real load capacity is also affected by factors such as the surface structure and roughness of the workpiece. Please take the measured data as the standard;
***: The working air pressure and the surface roughness of the workpiece in the usage scenario may have different degrees of impact on the life-time. Please configure Rochu control Unit. Do not exceed the safe air pressure.

DAC Straight Fitting Installation

Scan to watch videos

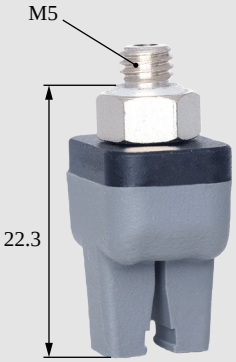

DAL Side Fitting Installation

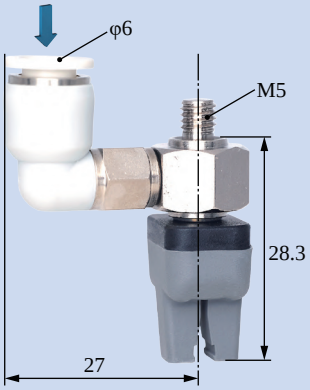

Scara Robotic Arm Installation

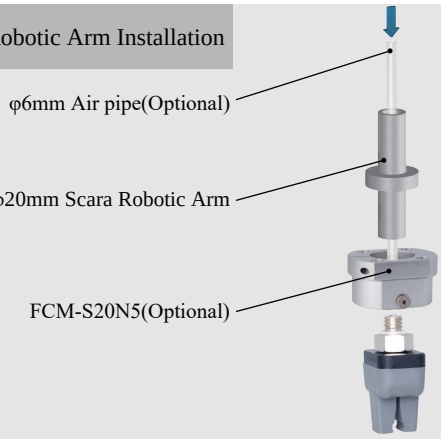

Robotic Arm Flange Side Fitting Installation

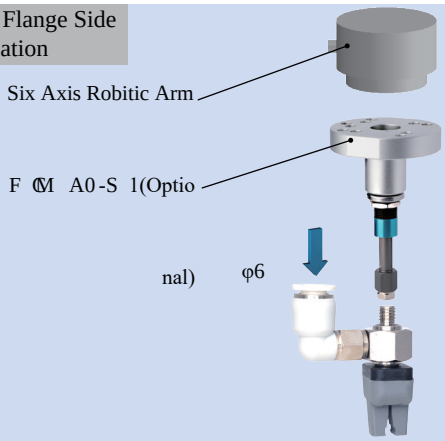

Rigid Connection Installation

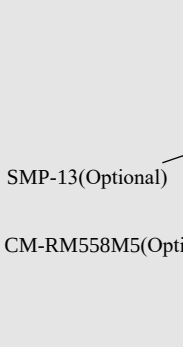

Buffer Installation

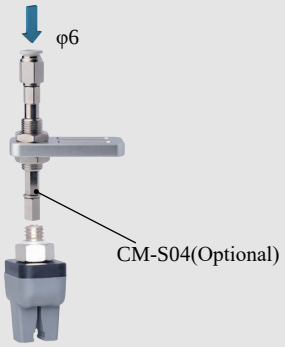

Matrix Installation

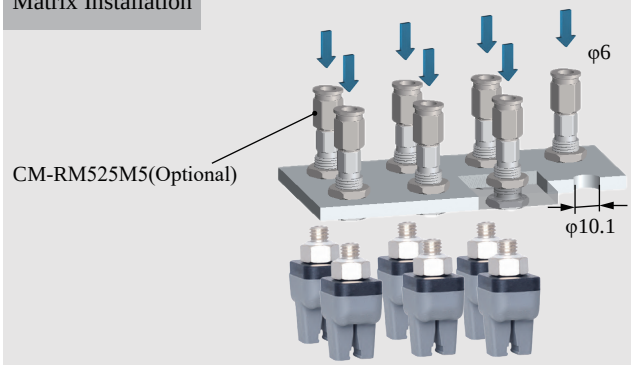

Precise Positioning Installation

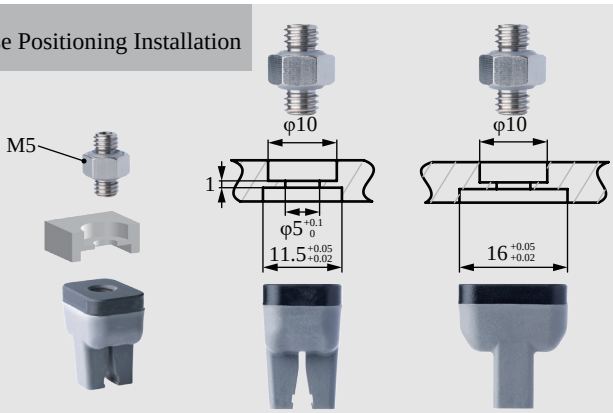

Installation of Optical Fiber Sensors





DAC-2076D5[P]/S Direct-through P Type		DAL-2076D5[P]/S Side-through P Type	
DAC-2076D5[PAS]/S Direct-through Dust-free P Type		DAL-2076D5[PAS]/S Side-through Dust-free P Type	
Weight	5.4g	**Weight**	16.9g



Product features

- Fingertip open under pressure and clamped in a vacuum. Fingertip distance G can be adjusted by working pressure.It is suggested to be used with Rochu control unit.
- Soft beak material is divided into Normal Material [P] and Dust-free Normal Material [PAS]. When the workpiece is light, or very soft, easy to adhere to adsorp on the soft beak, Dust-free Normal Material [PAS] is preferred.
- Food-grade material, direct food contact approved.



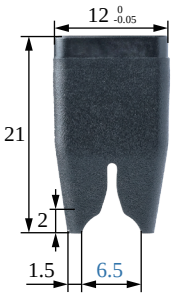



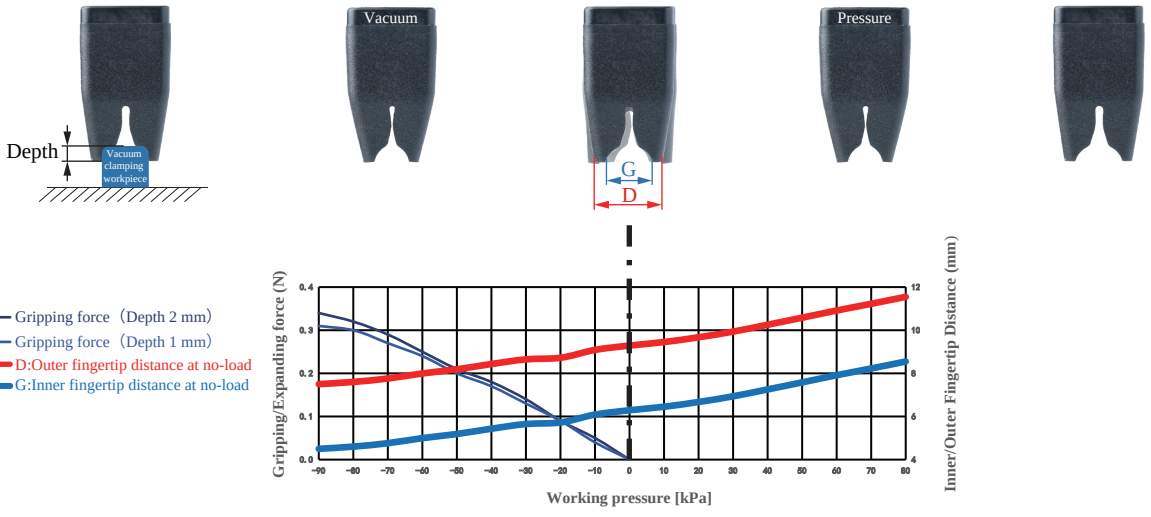

The clamping/inner-supporting force data of this product are measured based on the ideal workpiece size.
When the workpiece size deviates from the ideal value, the clamping/inner-supporting force decreases linearly.
If the workpiece size exceeds the clamping range or inner-supporting range, the clamping/inner-supporting force drops to 0.

Paremeter

Gripping range	5.5-7.5mm	Gripping force	0-0.3N	Theoretical gripping load**	0-14g	Ideal gripping workpiece size*	6.5mm
Internal gripping range	—	Internal gripping force	—	Theoretical internal gripping load**	—	Ideal internal gripping workpiece size*	—
Joint size	M5	Life time***	1.5 million times	Contact Temperature	<220℃	Safe pressure***	<80kPa

*: The width of the cuboid that generates the maximum gripping force (two-finger gripping), the outer diameter of the cylinder (multi-finger gripping), the width of the square hole (two-finger internal gripping), or the inner diameter of the circular hole (multi-finger internal gripping);
**: Only the theoretical load of the ideal workpiece under standard working conditions is marked for reference and comparison. The real load capacity is also affected by factors such as the surface structure and roughness of the workpiece. Please take the measured data as the standard;
***: The working air pressure and the surface roughness of the workpiece in the usage scenario may have different degrees of impact on the life-time. Please configure Rochu control Unit. Do not exceed the safe air pressure.

DAC Straight Fitting Installation

Scan to watch videos



DAL Side Fitting Installation

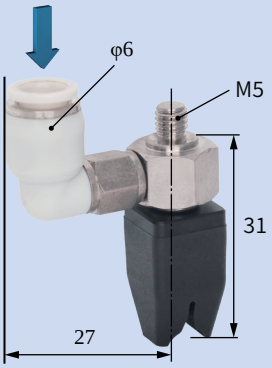

Scara Robotic Arm Installation

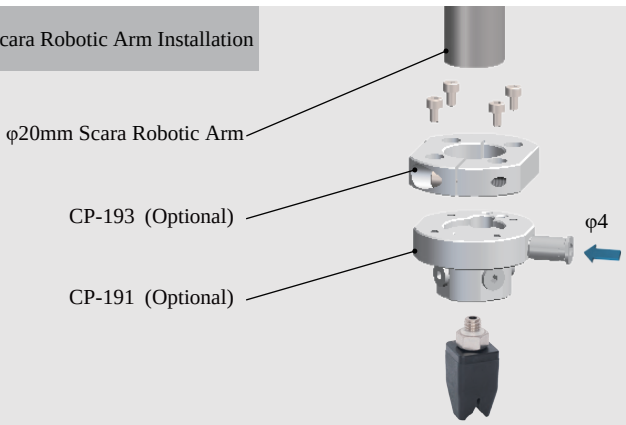

Robotic Arm Flange Side Fitting Installation

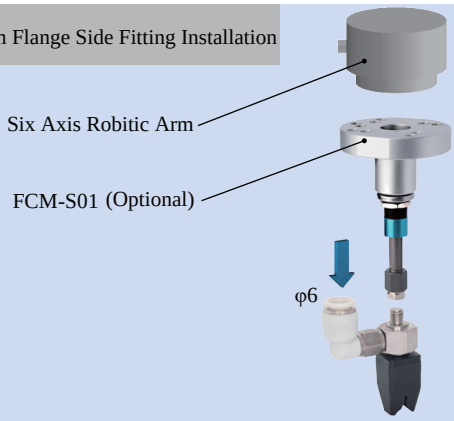

Rigid Connection Installation

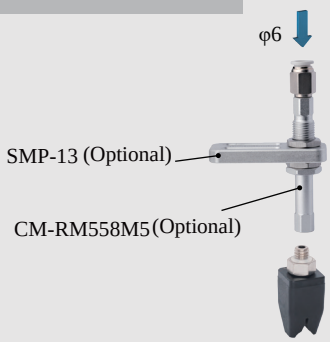

Buffer Installation

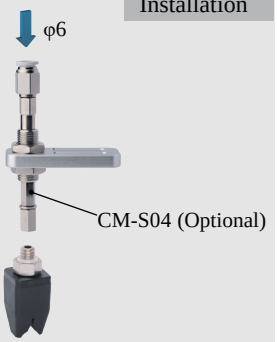

Matrix Installation

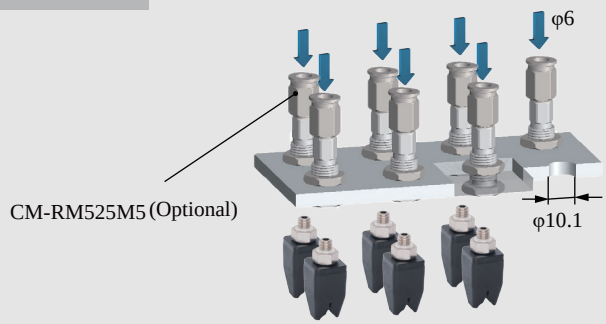

Photoelectric Sensor Installation

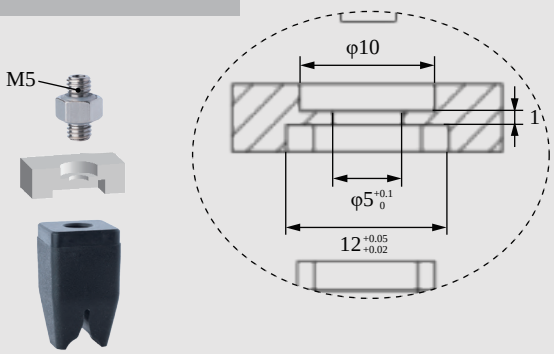

Installation of Optical Fiber Sensors



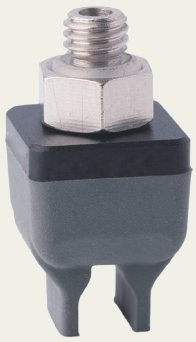	DAC-2GN084D6[H]/S Direct-through H Type		DAL-2GN084D6[H]/S Side-through H Type	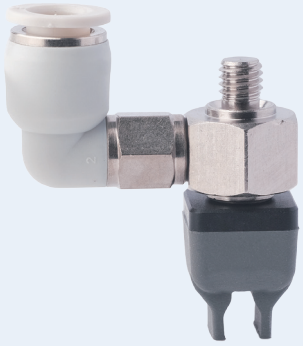
	DAC-2GN084D6[HAS]/S Direct-through Dust-free H Type		DAL-2GN084D6[HAS]/S Side-through Dust-free H Type	
	Weight	4.3g	Weight	15.4g

- Fingertips open under pressure state and clamp in a vacuum. Inner fingertips distance G can be adjusted by working pressure.It is suggested to be used with Rochu control unit.
- When soft beaks touch the workpiece directly, opt for non-marking materials [HAS] for workpieces needing dust-proofing or prone to adsorption.

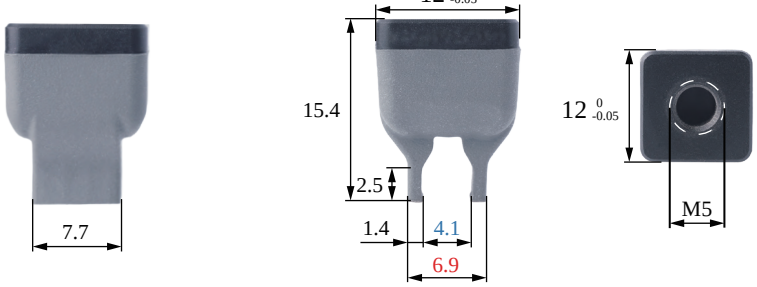



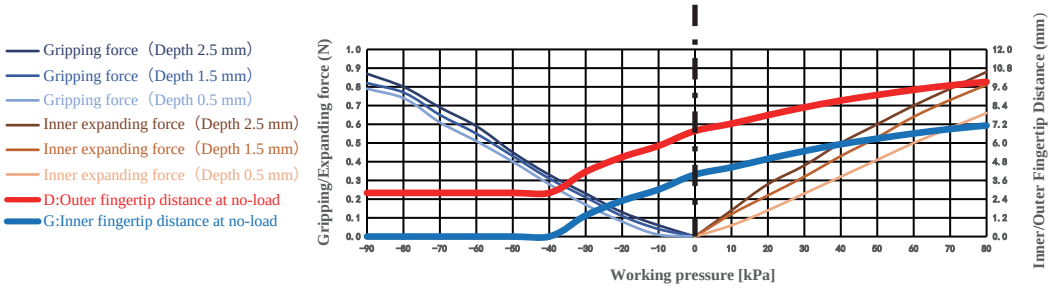

Gripping range	1-6mm	Gripping force	0-0.9N	Theoretical gripping load**	0-35g	Ideal gripping workpiece size*	3.5mm
Internal gripping range	5.5-7.5mm	Internal gripping force	0-0.9N	Theoretical internal gripping load**	0-35g	Ideal internal gripping workpiece size*	7mm
Joint size	M5	Life time***	1.5 million times	Contact Temperature	<220°C	Safe pressure***	<80kPa

DAC Straight Fitting Installation

Scan to watch videos

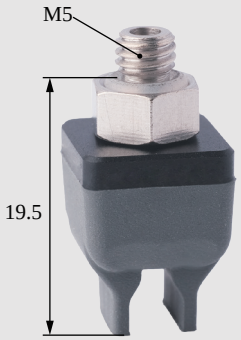

DAL Side Fitting Installation

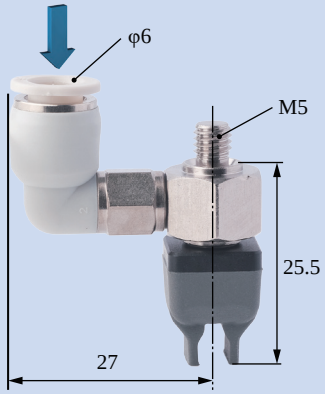

Scara Robotic Arm Installation

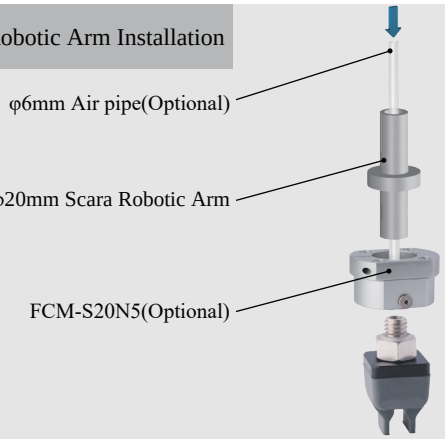

Robotic Arm Flange Side Fitting Installation

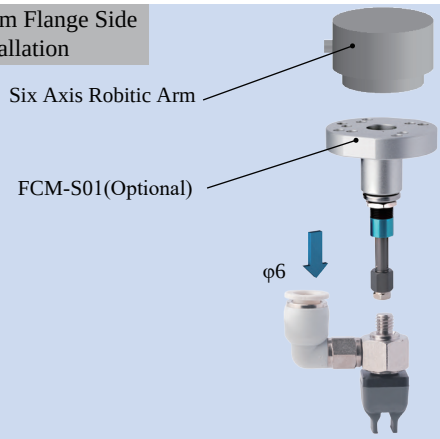

Rigid Connection Installation

Buffer Installation

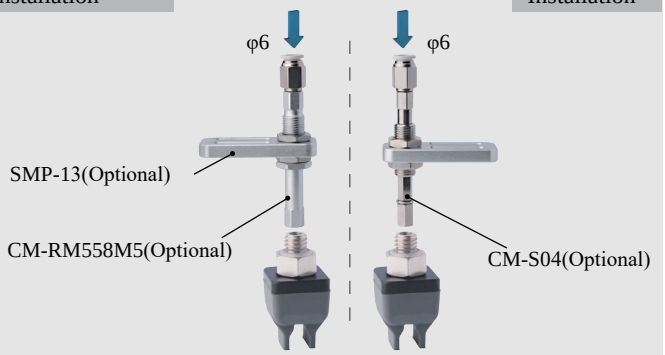

Matrix Installation

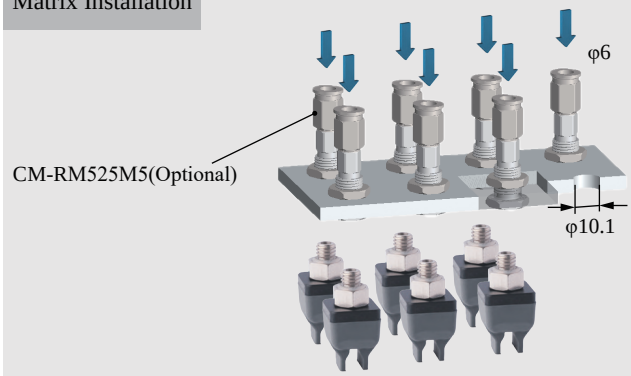

Precise Positioning Installation

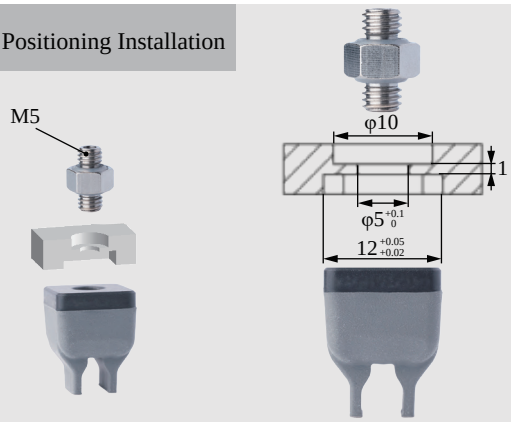

Installation of Optical Fiber Sensors

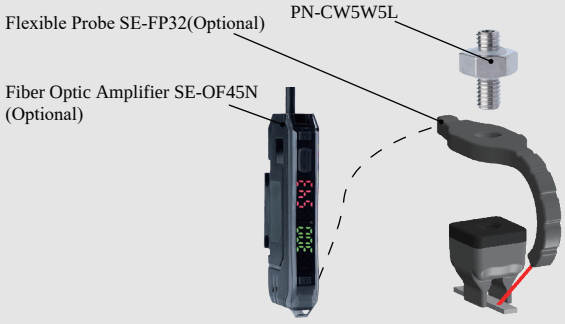

	DAC-2GN082D8[H]/S Direct-through H Type		DAL-2GN082D8[H]/S Side-through H Type		
	DAC-2GN082D8[HAS]/S Direct-through Dust-free H Type		DAL-2GN082D8[HAS]/S Side-through Dust-free H Type		
	Weight	4.1g	Weight	15.2g	

- Fingertips open under pressure state and clamp in a vacuum. Inner fingertips distance G can be adjusted by working pressure.It is suggested to be used with Rochu control unit.
- When soft beaks touch the workpiece directly, opt for non-marking materials [HAS] for workpieces needing dust-proofing or prone to adsorption.

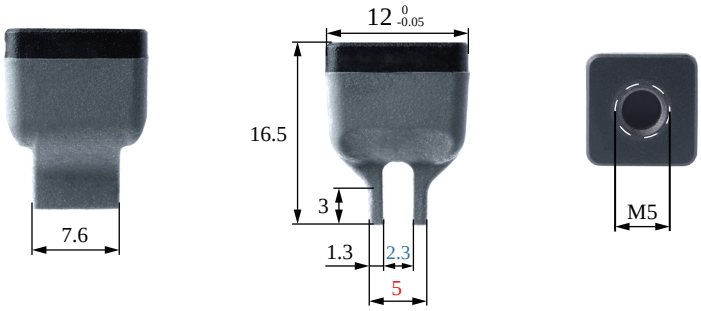

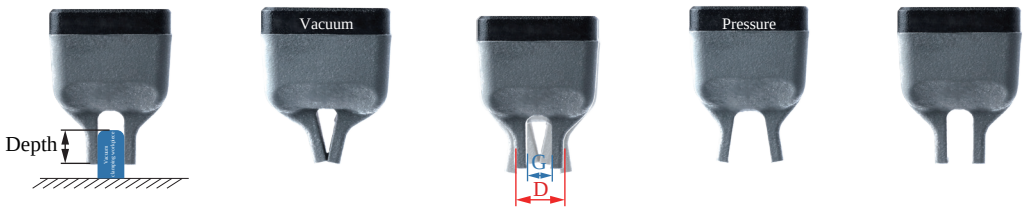

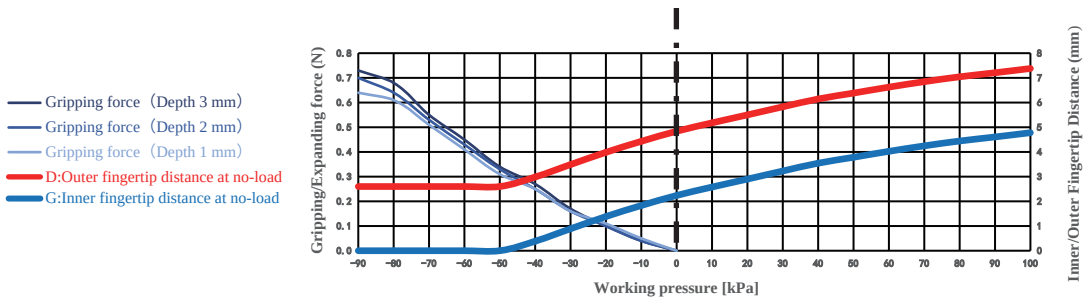

Gripping range	1-3.5mm	Gripping force	0-0.7N	Theoretical gripping load**	0-29g	Ideal gripping workpiece size*	2.5mm
Internal gripping range	—	Internal gripping force	—	Theoretical internal gripping load**	—	Ideal internal gripping workpiece size*	—
Joint size	M5	Life time***	1.5 million times	Contact Temperature	<220℃	Safe pressure***	<100kPa

DAC Straight Fitting Installation

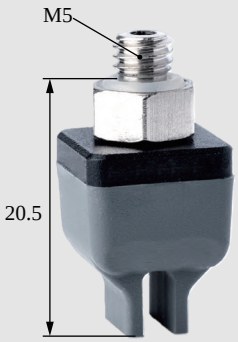

DAL Side Fitting Installation

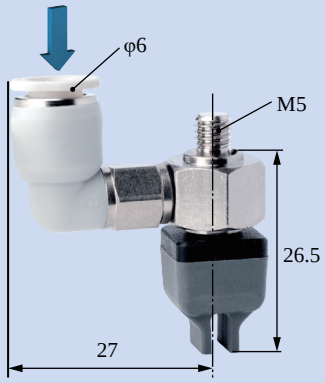

Scara Robotic Arm Installation

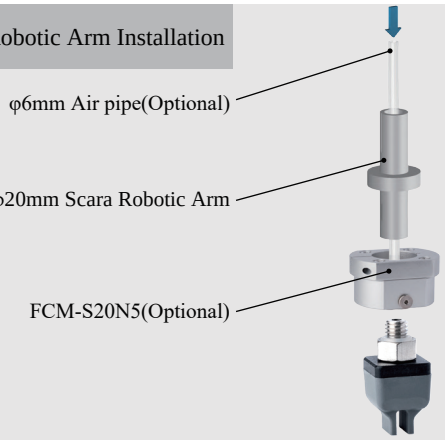

Robotic Arm Flange Side Fitting Installation

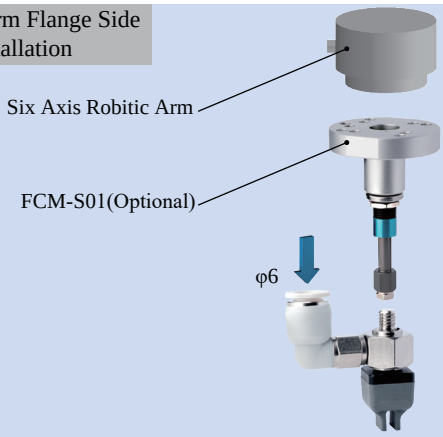

Rigid Connection Installation

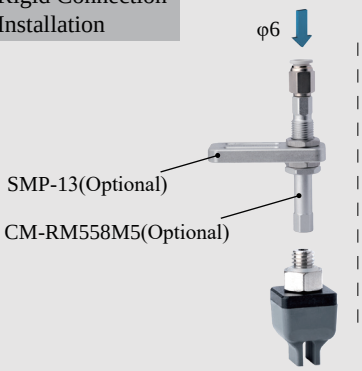

Buffer Installation



Matrix Installation

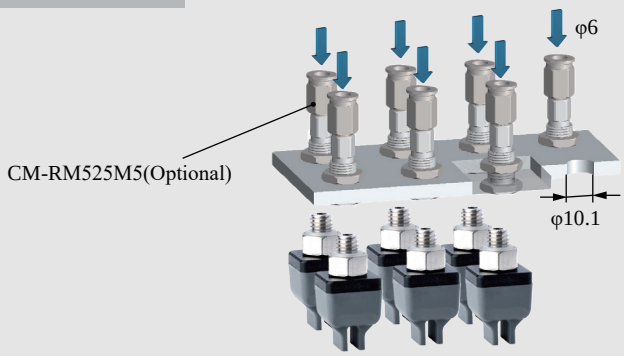

Precise Positioning Installation

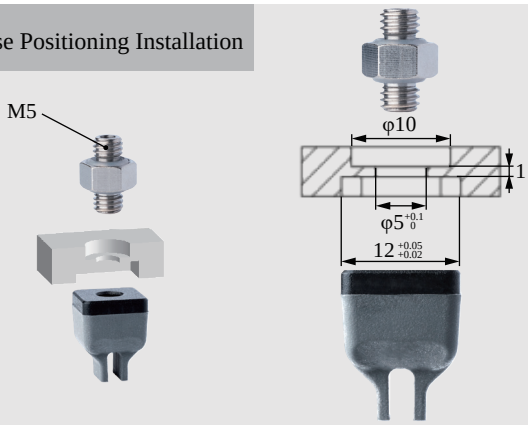

Installation of Optical Fiber Sensors

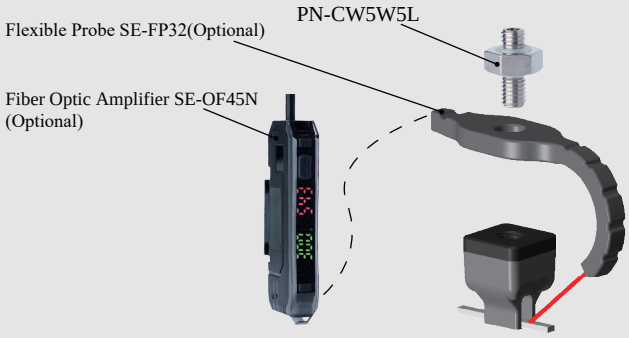



DAC-2GN082D8[LH]/S Direct-through Anti-static H Type		DAL-2GN082D8[LH]/S Side-through Anti-static H Type	
DAC-2GN082D8[LHAS]/S Direct-through Anti-static Dust-free H Type		DAL-2GN082D8[LHAS]/S Side-through Anti-static Dust-free H Type	
Weight	4.1g	Weight	15.2g



- Fingertips open under pressure state and clamp in a vacuum. Inner fingertips distance G and outer fingertips distance D can be adjusted by working pressure.It is suggested to be used with Rochu control unit.
- The Anti-static material meets the requirements of the national standard GB/T11210-2014, with a point-to-point resistance of 0.1-1000MΩ. The Anti-static Dust-free type [LHAS] is more suitable for dealing with workpieces that have dustproof requirements or are miniature and lightweight.





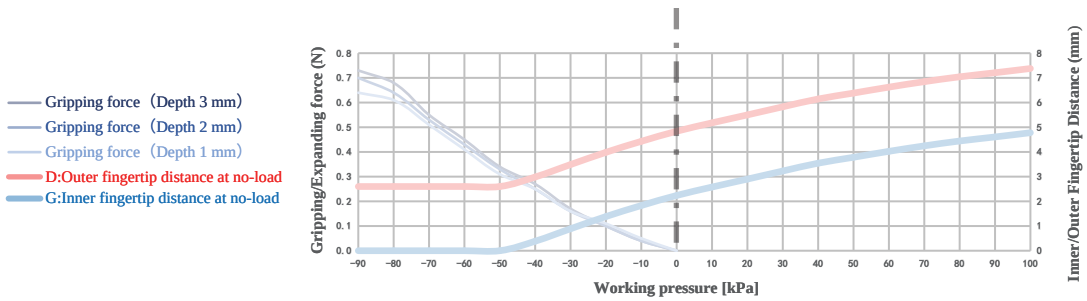

Gripping range	1-3.5mm	Gripping force	0-0.77N	Theoretical gripping load**	0-31g	Ideal gripping workpiece size*	2.5mm
Internal gripping range	—	Internal gripping force	—	Theoretical internal gripping load**	—	Ideal internal gripping workpiece size*	—
Joint size	M5	Life time***	1.5 million times	Contact Temperature	<220℃	Safe pressure***	<80kPa

DAC Straight Fitting Installation

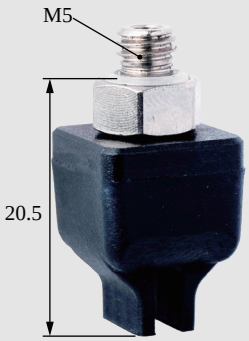

DAL Side Fitting Installation

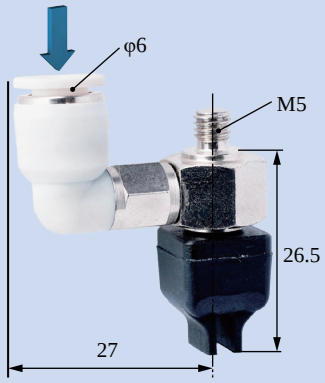

Scara Robotic Arm Installation

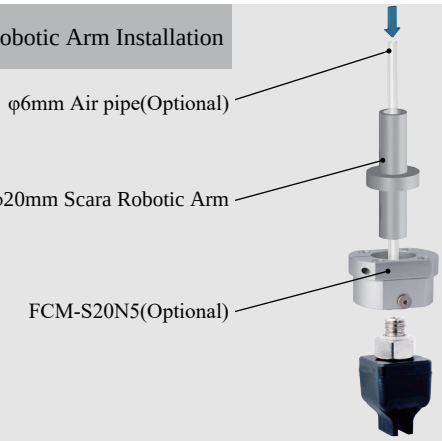

Robotic Arm Flange Side Fitting Installation

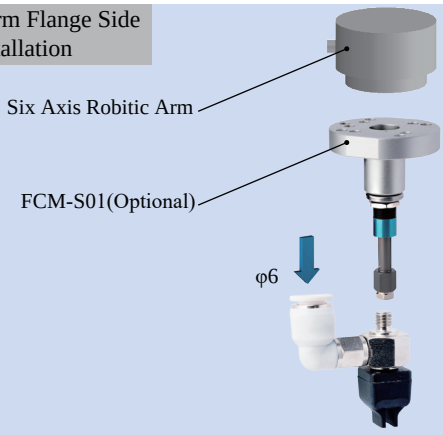

Rigid Connection Installation

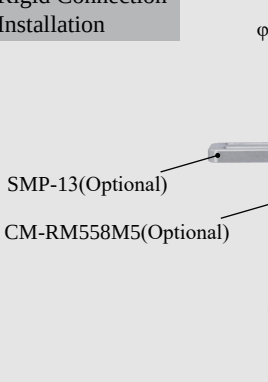

Buffer Installation



Matrix Installation

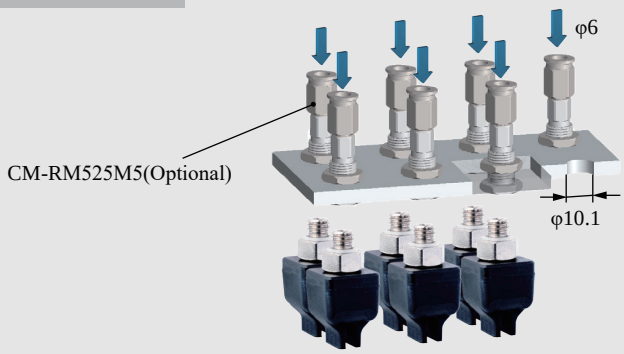

Precise Positioning Installation



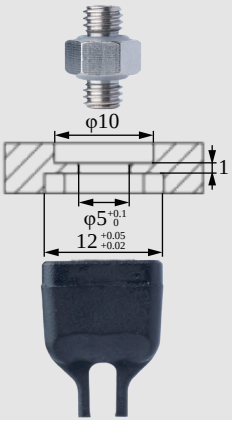

Installation of Optical Fiber Sensors

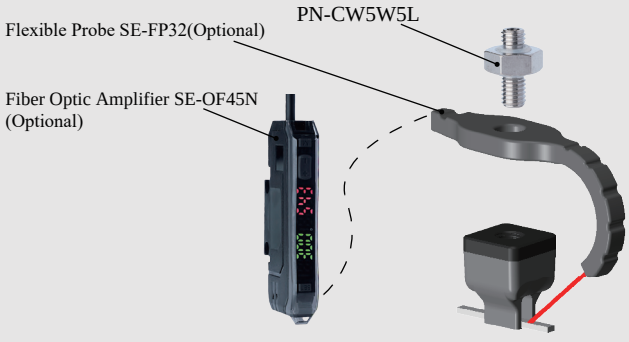



DAC-20301[H]/S Direct-through H Type		DAL-20301[H]/S Side-through H Type	
DAC-20301[HAS]/S Direct-through Dust-free H Type		DAL-20301[HAS]/S Side-through Dust-free H Type	
Weight	6g	Weight	17.5g

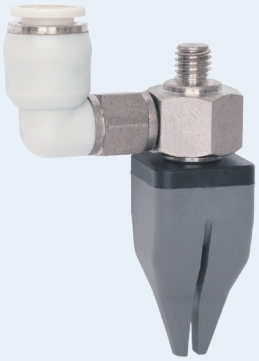

- Fingertip open under pressure and clamped in a vacuum. Fingertip distance G can be adjusted by working pressure.It is suggested to be used with Rochu control unit.
- Soft beak material is divided into Normal Material [H] and Dust-free Normal Material [HAS]. When the workpiece is light, or very soft, easy to adhere to adsorp on the soft beak, Dust-free Normal Material [HAS] is preferred.
- Food-grade material, direct food contact approved.

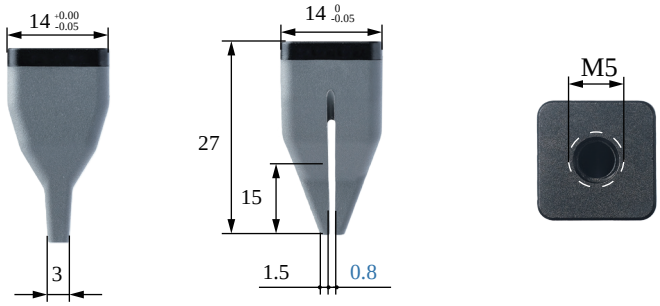

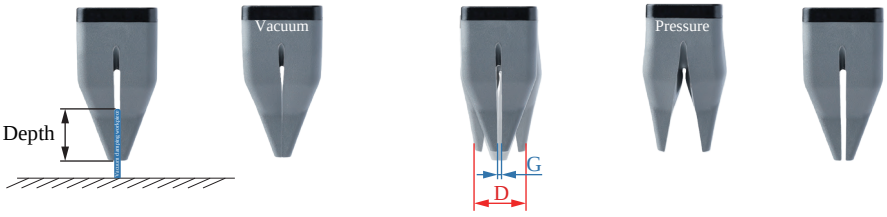

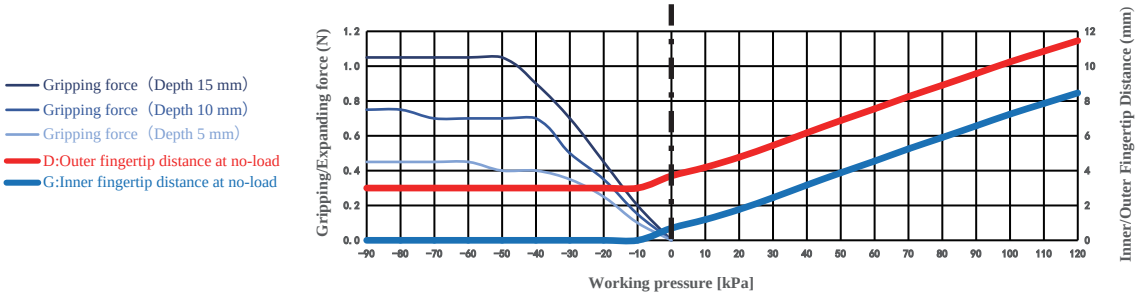

Gripping range	0-2.8mm	Gripping force	0-1.1N	Theoretical gripping load**	0-42g	Ideal gripping workpiece size*	0.8mm
Internal gripping range	—	Internal gripping force	—	Theoretical internal gripping load**	—	Ideal internal gripping workpiece size*	—
Joint size	M5	Life time***	1.5 million times	Contact Temperature	<220℃	Safe pressure***	<120kPa

DAC Straight Fitting Installation

Scan to watch videos

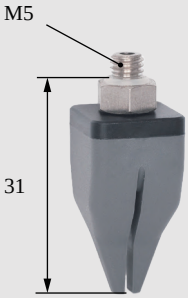

DAL Side Fitting Installation

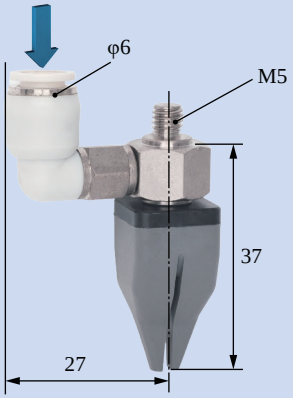

Scara Robotic Arm Installation

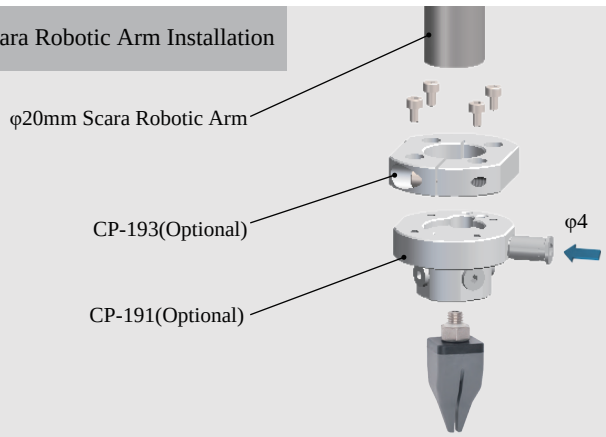

Robotic Arm Flange Side Fitting Installation

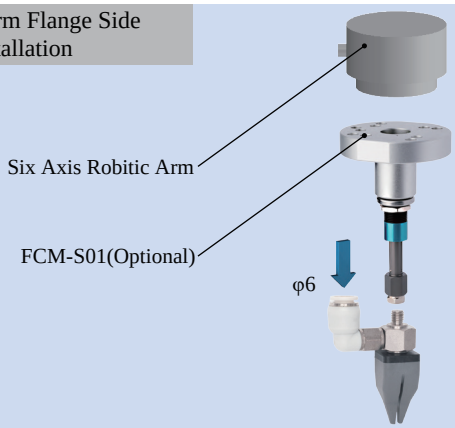

Rigid Connection Installation

Buffer Installation

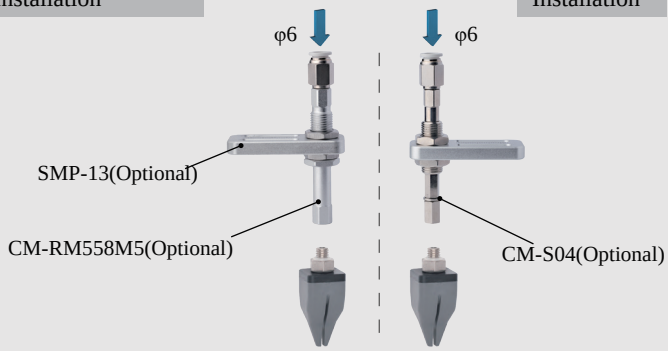

Matrix Installation

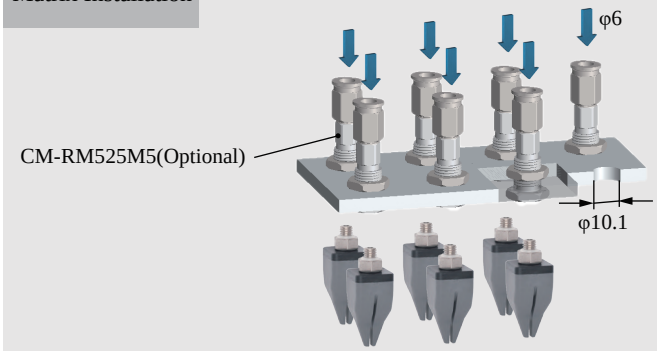

Precise Positioning Installation

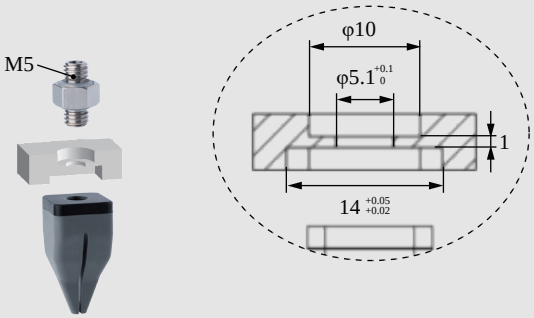

Installation of Optical Fiber Sensors

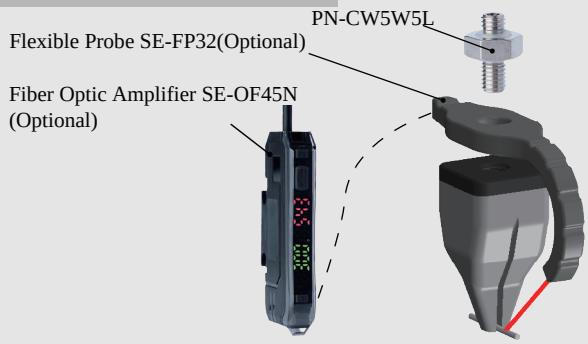



DAC-20501[H]/S Direct-through H Type	DAL-20501[H]/S Side-through H Type
DAC-20501[HAS]/S Direct-through Dust-free H Type	DAL-20501[HAS]/S Side-through Dust-free H Type



Weight	6.6g	Weight	18.1g

Product features

- Fingertip open under pressure and clamped in a vacuum. Fingertip distance G can be adjusted by working pressure.It is suggested to be used with Rochu control unit.
- Soft beak material is divided into Normal Material [H] and Dust-free Normal Material [HAS]. When the workpiece is light, or very soft, easy to adhere to adsorp on the soft beak, Dust-free Normal Material [HAS] is preferred.
- Food-grade material, direct food contact approved.

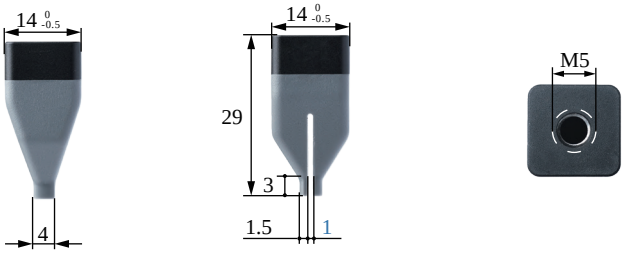

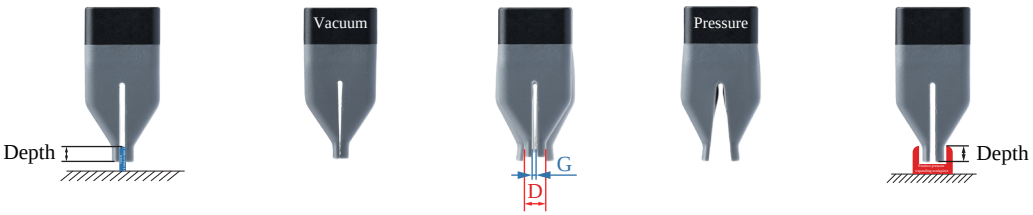

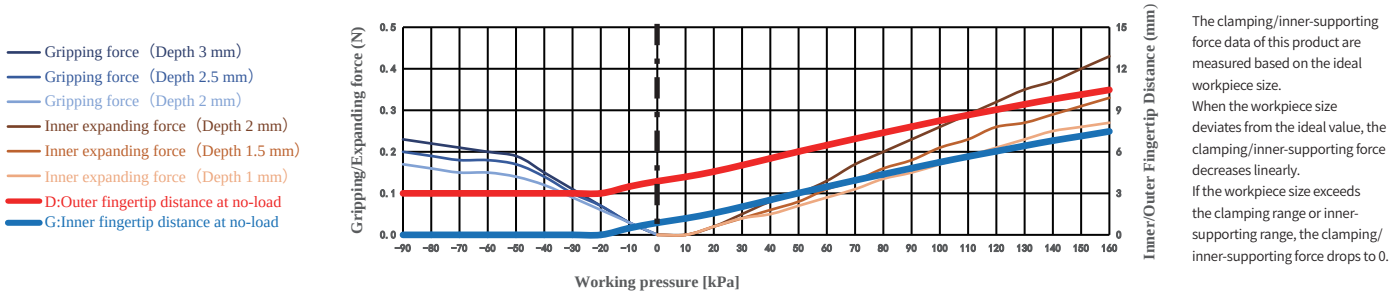

The clamping/inner-supporting force data of this product are measured based on the ideal workpiece size.
When the workpiece size deviates from the ideal value, the clamping/inner-supporting force decreases linearly.
If the workpiece size exceeds the clamping range or inner-supporting range, the clamping/inner-supporting force drops to 0.

Paremeter

Gripping range	1-2mm	Gripping force	0-0.2N	Theoretical gripping load**	0-9g	Ideal gripping workpiece size*	1mm
Internal gripping range	3-8mm	Internal gripping force	0-0.4N	Theoretical internal gripping load**	0-17g	Ideal internal gripping workpiece size*	5mm
Joint size	M5	Life time***	1.5 million times	Contact Temperature	<220°C	Safe pressure***	<160kPa

*: The width of the cuboid that generates the maximum gripping force (two-finger gripping), the outer diameter of the cylinder (multi-finger gripping), the width of the square hole (two-finger internal gripping), or the inner diameter of the circular hole (multi-finger internal gripping);
**: Only the theoretical load of the ideal workpiece under standard working conditions is marked for reference and comparison. The real load capacity is also affected by factors such as the surface structure and roughness of the workpiece. Please take the measured data as the standard;
***: The working air pressure and the surface roughness of the workpiece in the usage scenario may have different degrees of impact on the life-time. Please configure Rochu control Unit. Do not exceed the safe air pressure.

DAC Straight Fitting Installation

Scan to watch videos



DAL Side Fitting Installation

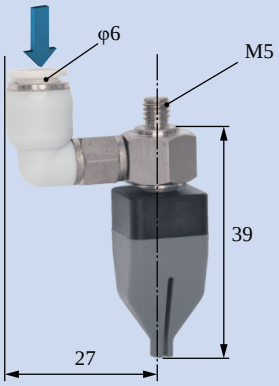

Scara Robotic Arm Installation

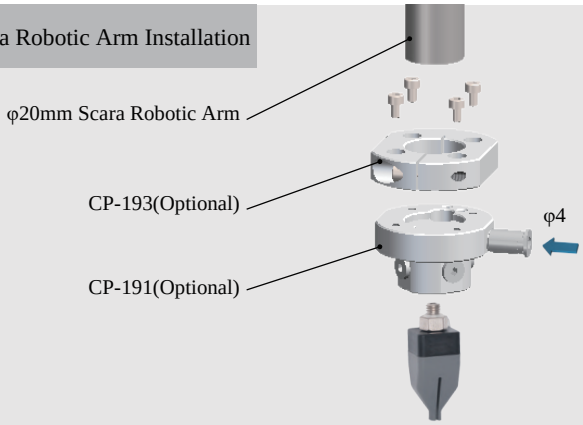

Robotic Arm Flange Side Fitting Installation

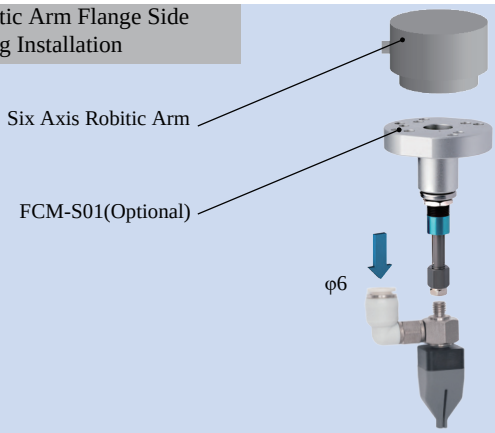

Rigid Connection Installation

Buffer Installation

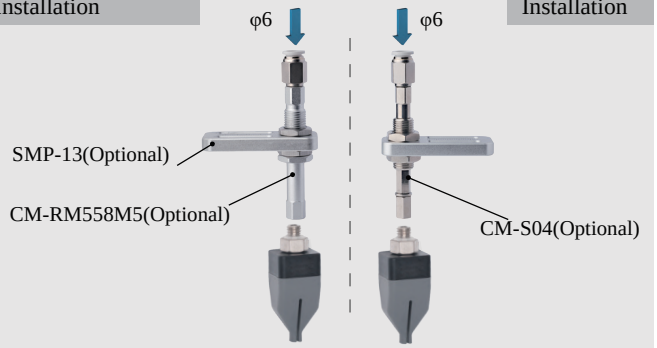

Matrix Installation

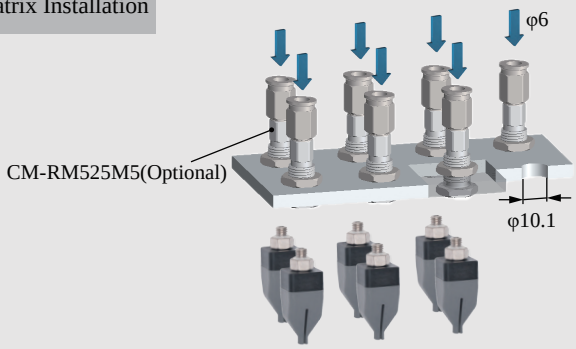

Precise Positioning Installation

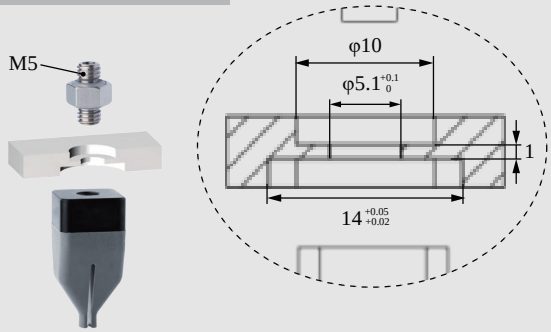

Installation of Optical Fiber Sensors





DAC-20501[LH]/S Direct-through Anti-static H Type		DAL-20501[LH]/S Side-through Anti-static H Type	
DAC-20501[LHAS]/S Direct-through Anti-static Dust-free H Type		DAL-20501[LHAS]/S Side-through Anti-static Dust-free H Type	
Weight	6.6g	Weight	18.1g



- Fingertip open under pressure and clamped in a vacuum. Inner fingertips distance D can be adjusted by working pressure.It is suggested to be used with Rochu control unit.
- Soft beak material is divided into Normal Material [LH] and Dust-free Normal Material [LHAS]. When the workpiece is light, or very soft, easy to adhere to adsorp on the soft beak, Dust-free Normal Material [LHAS] is preferred.



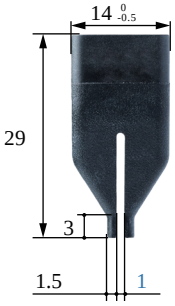



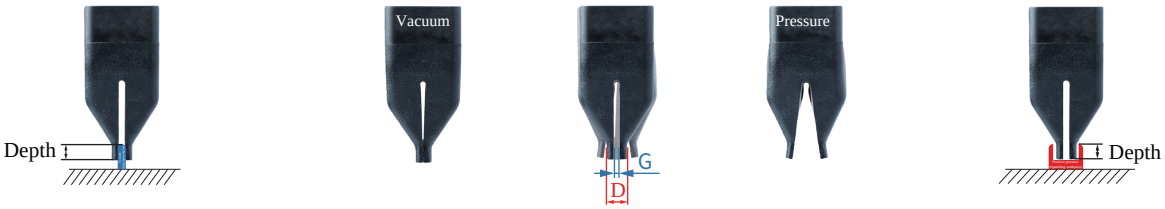

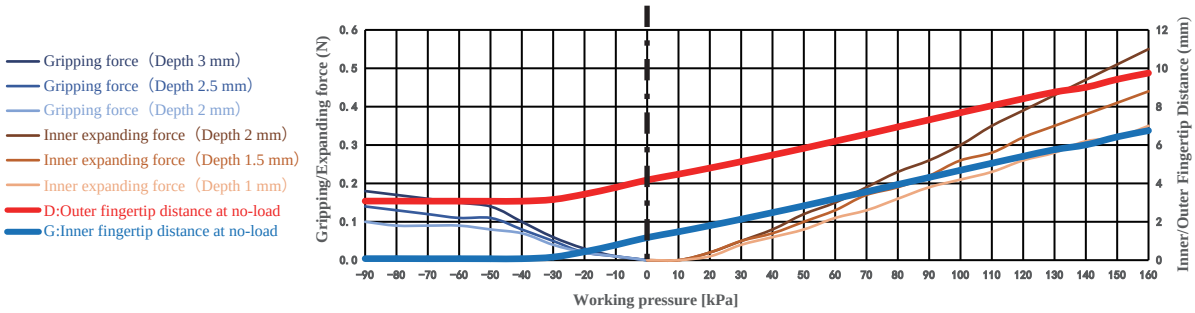

Gripping range	1-2mm	Gripping force	0-0.2N	Theoretical gripping load**	0-7g	Ideal gripping workpiece size*	1mm
Internal gripping range	3-8mm	Internal gripping force	0-0.6N	Theoretical internal gripping load**	0-22g	Ideal internal gripping workpiece size*	5mm
Joint size	M5	Life time***	1.5 million times	Contact Temperature	<220℃	Safe pressure***	<160kPa

DAC Straight Fitting Installation

Scan to watch videos

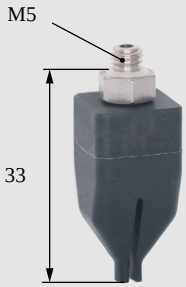

DAL Side Fitting Installation

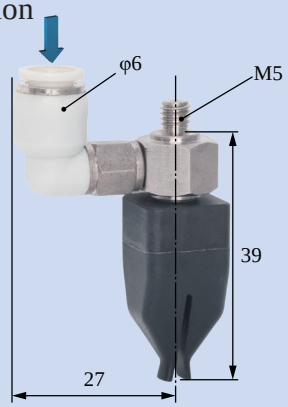

Scara Robotic Arm Installation

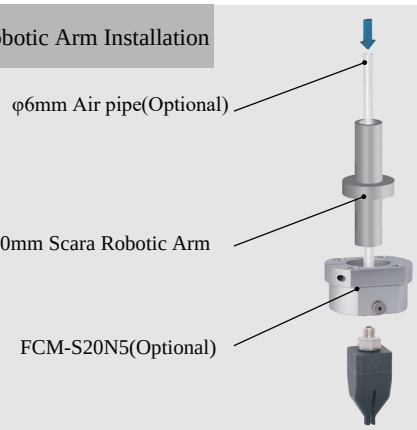

Robotic Arm Flange Side Fitting Installation

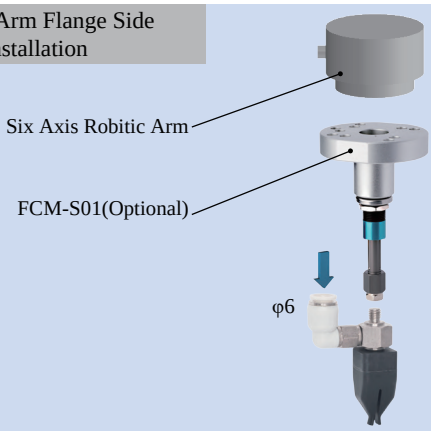

Rigid Connection Installation

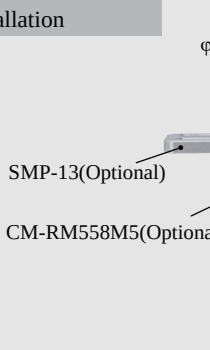

Buffer Installation

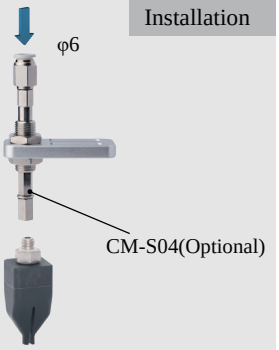

Matrix Installation

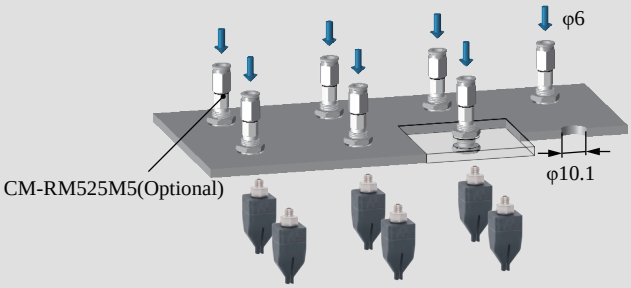

Precise Positioning Installation

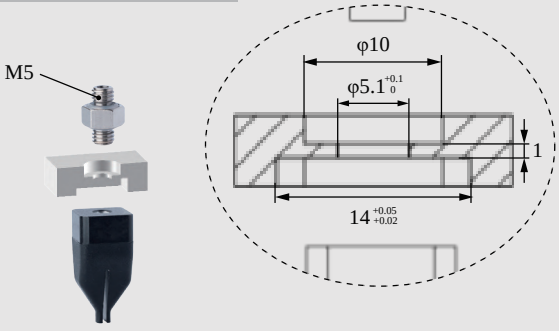

Installation of Optical Fiber Sensors





DAC-21D204[H]/S Direct-through H Type		DAL-21D204[H]/S Side-through H Type	
DAC-21D204[HAS]/S Direct-through Dust-free H Type		DAL-21D204[HAS]/S Side-through Dust-free H Type	
Weight	5.9g	Weight	16.9g

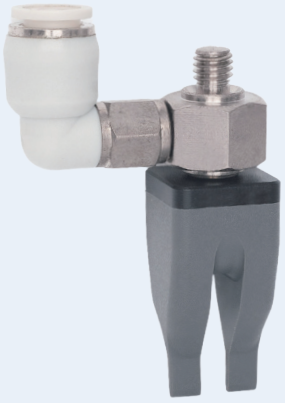

- Fingertip open under pressure and clamped in a vacuum. Fingertip distance G can be adjusted by working pressure.It is suggested to be used with Rochu control unit.
- Soft beak material is divided into Normal Material [H] and Dust-free Normal Material [HAS]. When the workpiece is light, or very soft, easy to adhere to adsorp on the soft beak, Dust-free Normal Material [HAS] is preferred.
- Food-grade material, direct food contact approved.

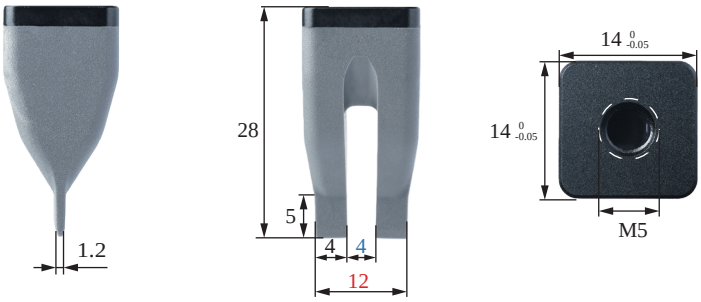

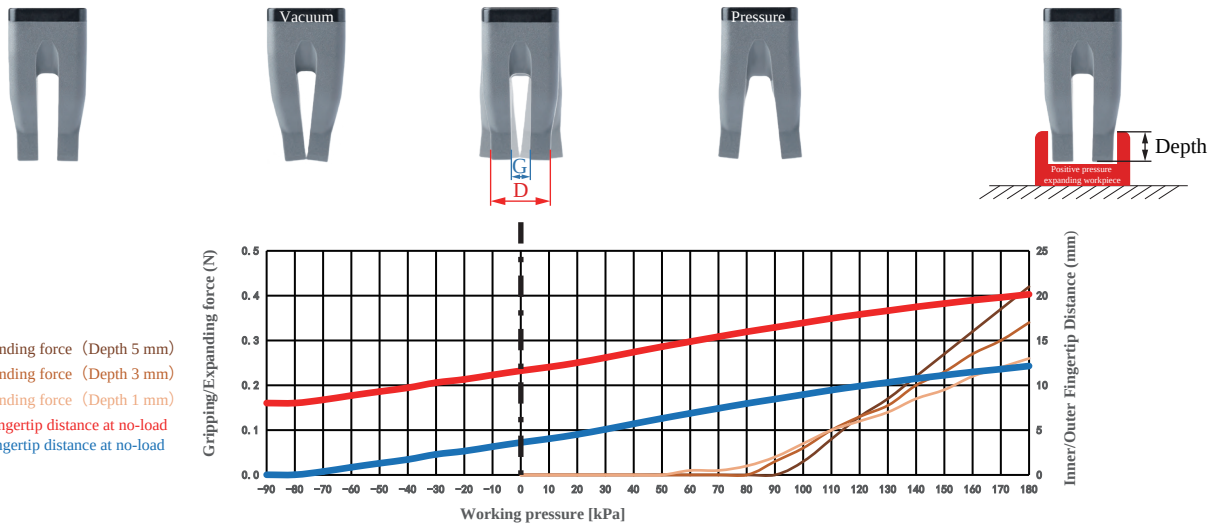

Gripping range	—	Gripping force	—	Theoretical gripping load**	—	Ideal gripping workpiece size*	—
Internal gripping range	8-18mm	Internal gripping force	0-0.4N	Theoretical internal gripping load**	0-17g	Ideal internal gripping workpiece size*	16mm
Joint size	M5	Life time***	1.5 million times	Contact Temperature	<220℃	Safe pressure***	<180kPa

DAC Straight Fitting Installation

Scan to watch videos



DAL Side Fitting Installation

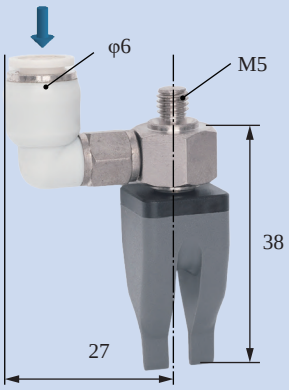

Scara Robotic Arm Installation

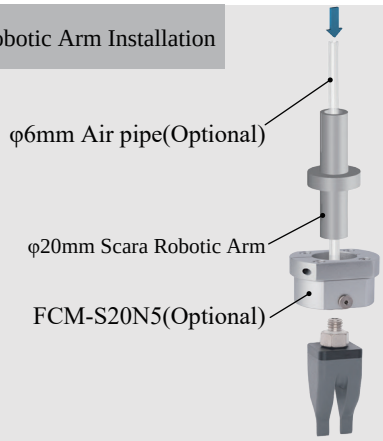

Robotic Arm Flange Side Fitting Installation

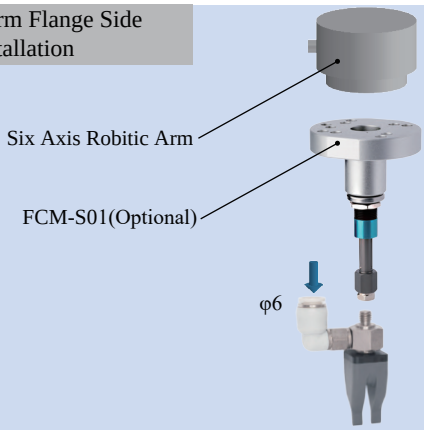

Rigid Connection Installation

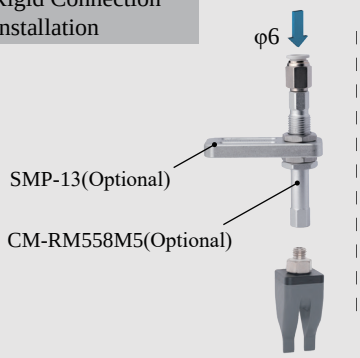

Buffer Installation

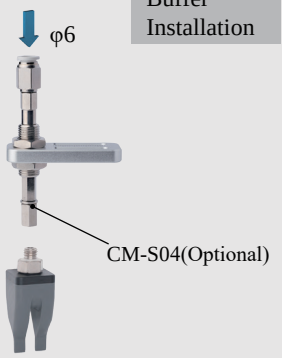

Matrix Installation

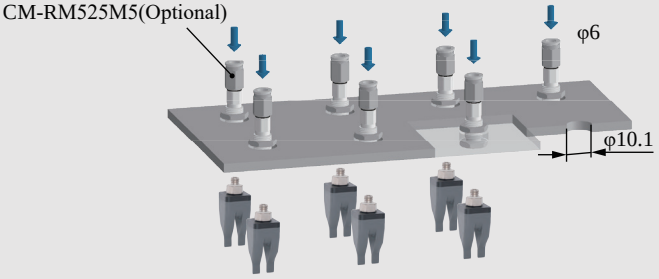

Precise Positioning Installation

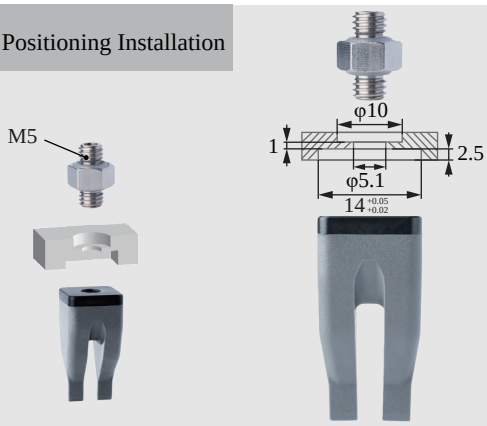

Installation of Optical Fiber Sensors



B-21D204[H]/S



DAC-2102D5[H]/S Direct-through H Type		DAL-2102D5[H]/S Side-through H Type	
DAC-2102D5[HAS]/S Direct-through Dust-free H Type		DAL-2102D5[HAS]/S Side-through Dust-free H Type	
Weight	6g	**Weight**	15.4g



Product features

- Fingertip open under pressure and clamped in a vacuum. Inner fingertips distance D can be adjusted by working pressure.It is suggested to be used with Rochu control unit.
- Soft beak material is divided into Normal Material [H] and Dust-free Normal Material [HAS]. When the workpiece is light, or very soft, easy to adhere to adsorp on the soft beak, Dust-free Normal Material [HAS] is preferred.
- Food-grade material, direct food contact approved.



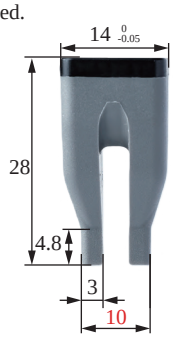

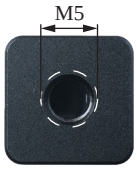

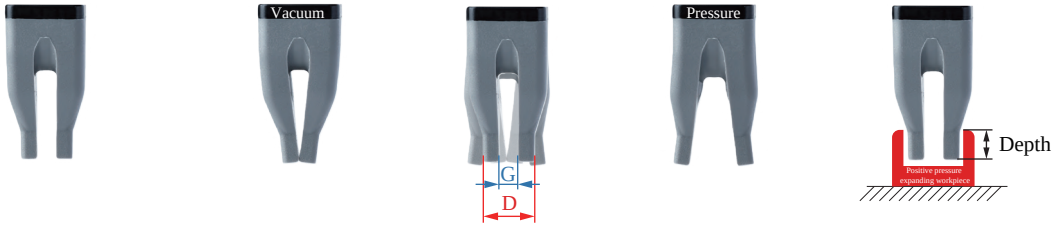

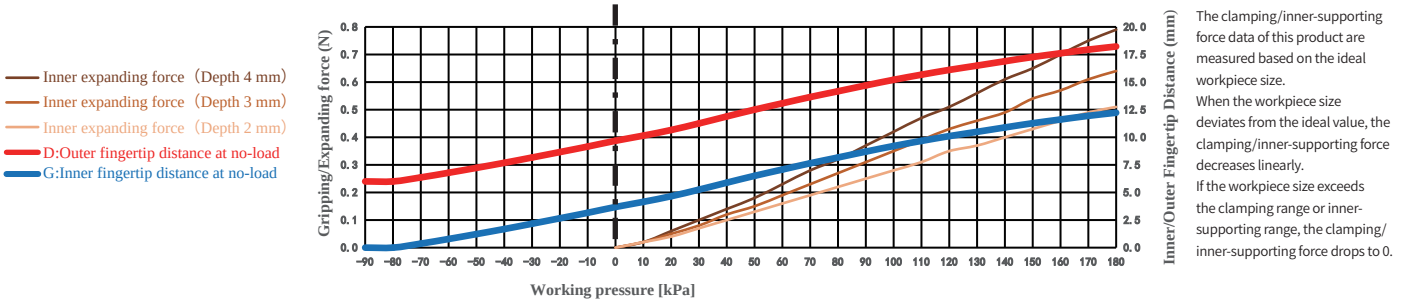

The clamping/inner-supporting force data of this product are measured based on the ideal workpiece size.
When the workpiece size deviates from the ideal value, the clamping/inner-supporting force decreases linearly.
If the workpiece size exceeds the clamping range or inner-supporting range, the clamping/inner-supporting force drops to 0.

Paremeter

Gripping range	—	Gripping force	—	Theoretical gripping load**	—	Ideal gripping workpiece size*	—
Internal gripping range	8-15mm	Internal gripping force	0-0.8N	Theoretical internal gripping load**	0-32g	Ideal internal gripping workpiece size*	10mm
Joint size	M5	Life time***	1.5 million times	Contact Temperature	<220℃	Safe pressure***	<180kPa

*: The width of the cuboid that generates the maximum gripping force (two-finger gripping), the outer diameter of the cylinder (multi-finger gripping), the width of the square hole (two-finger internal gripping), or the inner diameter of the circular hole (multi-finger internal gripping);
**: Only the theoretical load of the ideal workpiece under standard working conditions is marked for reference and comparison. The real load capacity is also affected by factors such as the surface structure and roughness of the workpiece. Please take the measured data as the standard;
***: The working air pressure and the surface roughness of the workpiece in the usage scenario may have different degrees of impact on the life-time. Please configure Rochu control Unit. Do not exceed the safe air pressure.

DAC Straight Fitting Installation

Scan to watch videos



DAL Side Fitting Installation

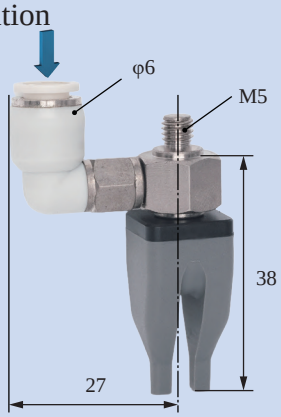

Scara Robotic Arm Installation

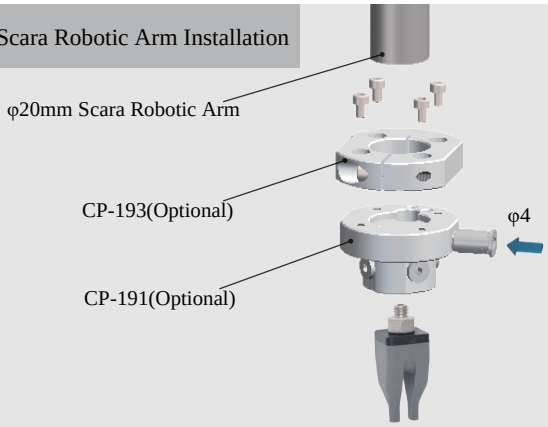

Robotic Arm Flange Side Fitting Installation

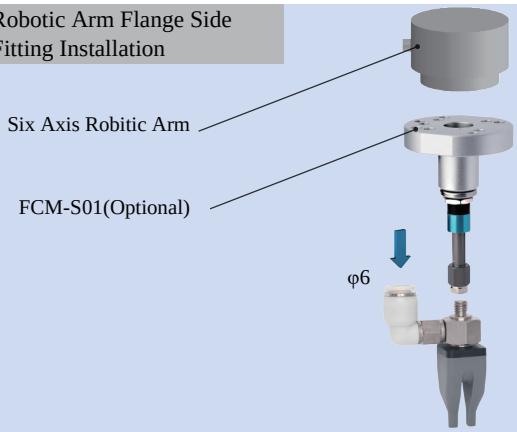

Rigid Connection Installation

Buffer Installation

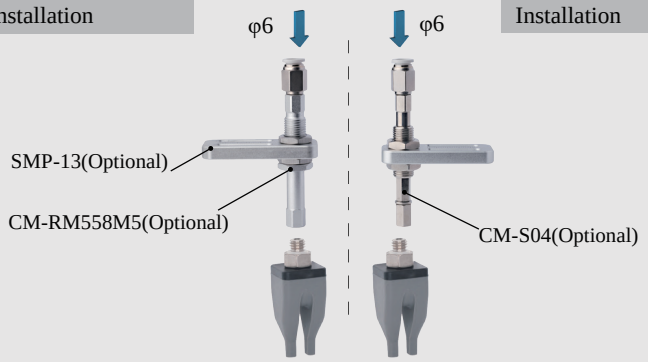

Matrix Installation

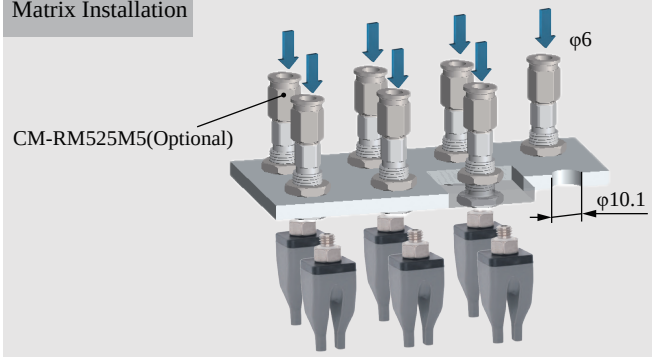

Precise Positioning Installation

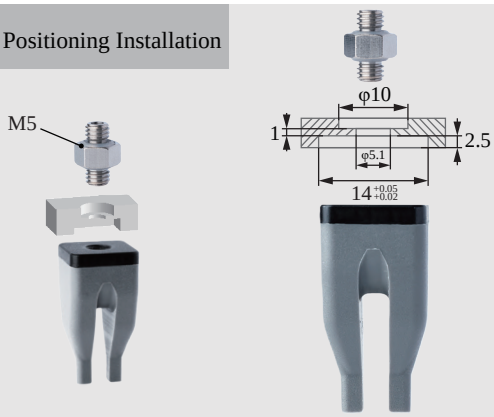

Installation of Optical Fiber Sensors

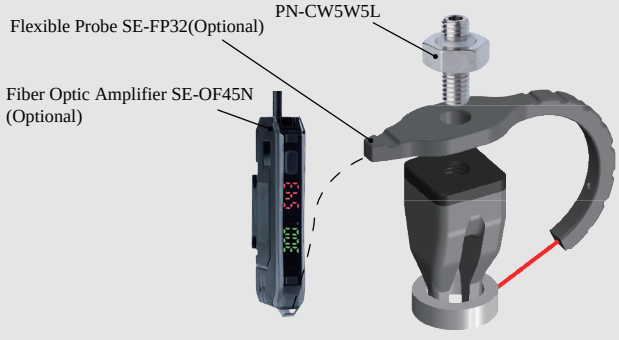

	DAC-2V0401[P]/S Direct-through P Type		DAL-2V0401[P]/S Side-through P Type	
	DAC-2V0401[PAS]/S Direct-through Dust-free P Type		DAL-2V0401[PAS]/S Side-through Dust-free P Type	
	Weight	6.9g	Weight	18.4g

- Fingertip open under pressure and clamped in a vacuum. Fingertip distance G can be adjusted by working pressure.It is suggested to be used with Rochu control unit.
- Soft beak material is divided into Normal Material [P] and Dust-free Normal Material [PAS]. When the workpiece is light, or very soft, easy to adhere to adsorp on the soft beak, Dust-free Normal Material [PAS] is preferred.
- Food-grade material, direct food contact approved.

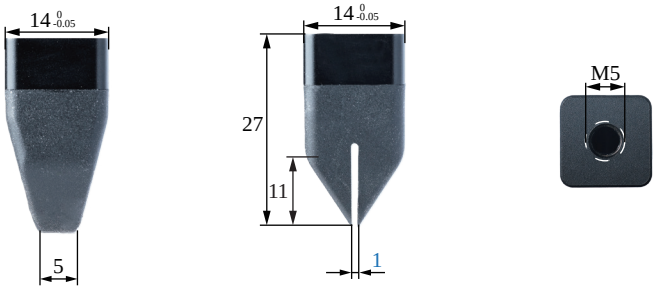

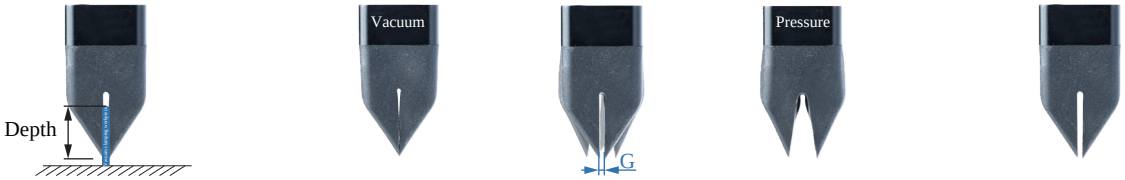

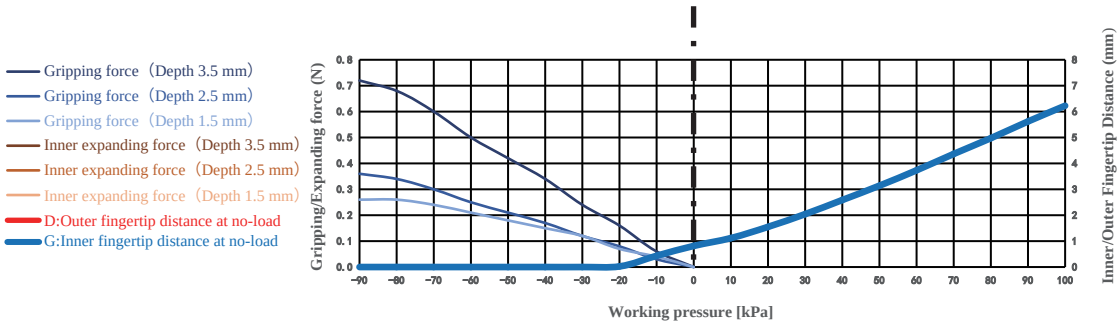

Gripping range	0-3mm	Gripping force	0-0.7N	Theoretical gripping load**	0-29g	Ideal gripping workpiece size*	1mm
Internal gripping range	—	Internal gripping force	—	Theoretical internal gripping load**	—	Ideal internal gripping workpiece size*	—
Joint size	M5	Life time***	1.5 million times	Contact Temperature	<220℃	Safe pressure***	<100kPa

DAC Straight Fitting Installation

Scan to watch videos



DAL Side Fitting Installation

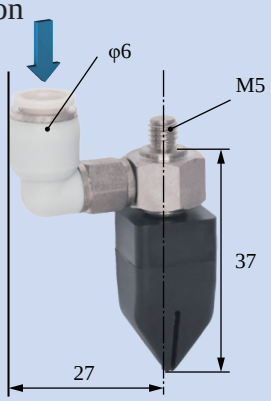

Scara Robotic Arm Installation

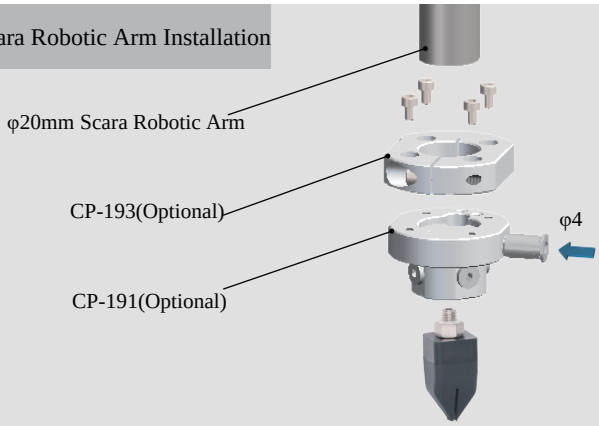

Robotic Arm Flange Side Fitting Installation

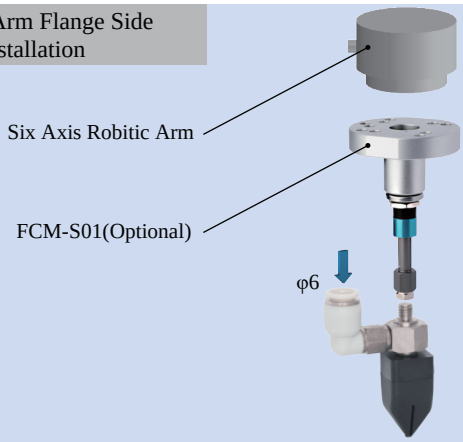

Robotic Arm Flange Side Fitting Installation

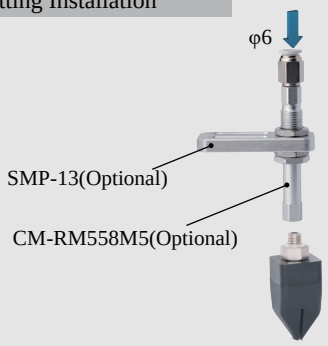

Buffer Installation

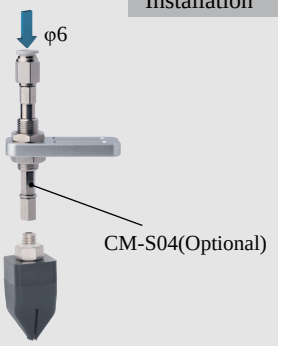

Matrix Installation

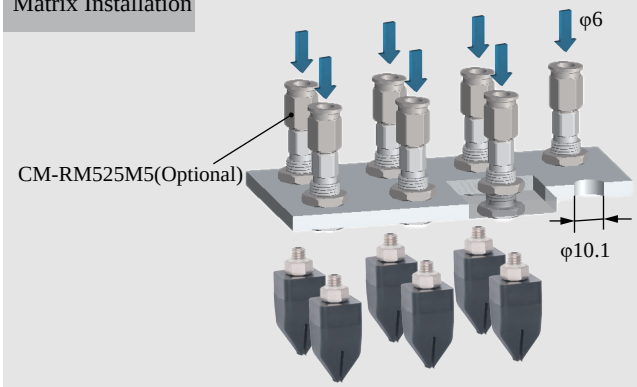

Precise Positioning Installation

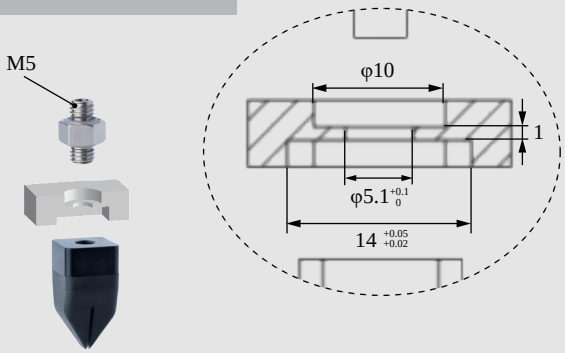

Installation of Optical Fiber Sensors





DAC-2AN1D504[H]/S Direct-through H Type		DAL-2AN1D504[H]/S Side-through H Type	
DAC-2AN1D504[HAS]/S Direct-through Dust-free H Type		DAL-2AN1D504[HAS]/S Side-through Dust-free H Type	
Weight	6.1g	Weight	16.8g



- Fingertip open under pressure and clamped in a vacuum. Fingertip distance G can be adjusted by working pressure.It is suggested to be used with Rochu control unit.
- Soft beak material is divided into Normal Material [H] and Dust-free Normal Material [HAS]. When the workpiece is light, or very soft, easy to adhere to adsorp on the soft beak, Dust-free Normal Material [HAS] is preferred.
- Food-grade material, direct food contact approved.

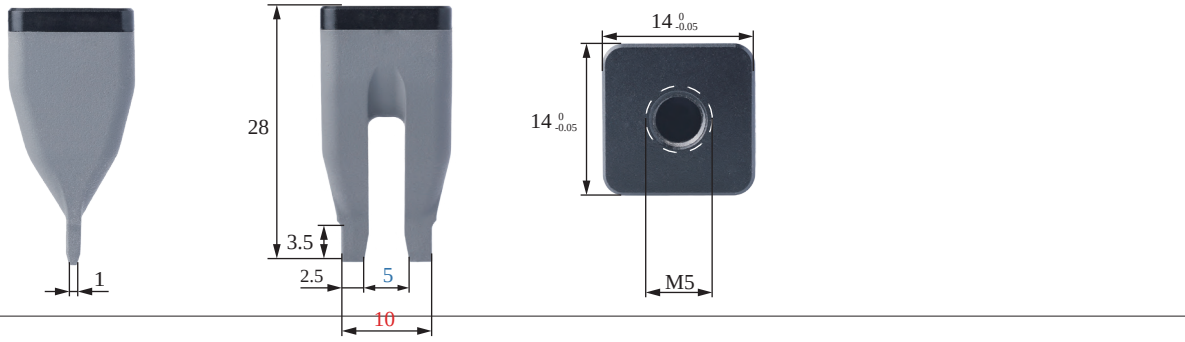

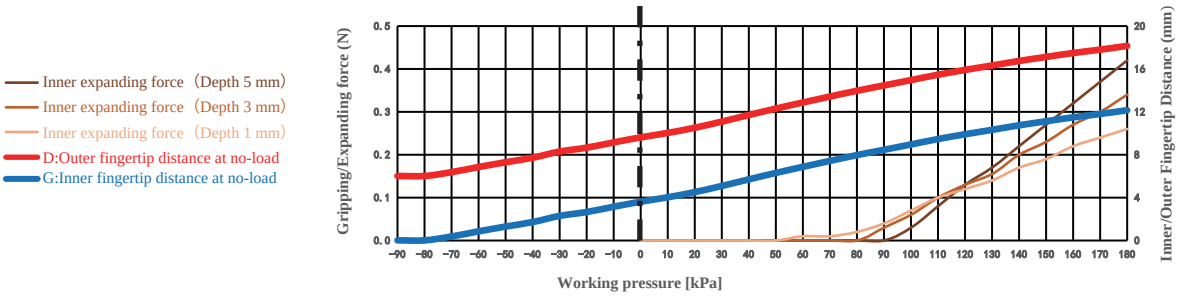

Gripping range	—	Gripping force	—	Theoretical gripping load**	—	Ideal gripping workpiece size*	—
Internal gripping range	7-15mm	Internal gripping force	0-0.4N	Theoretical internal gripping load**	0-17g	Ideal internal gripping workpiece size*	14mm
Joint size	M5	Life time***	1.5 million times	Contact Temperature	<220°C	Safe pressure***	<180kPa

DAC Straight Fitting Installation

Scan to watch videos



DAL Side Fitting Installation

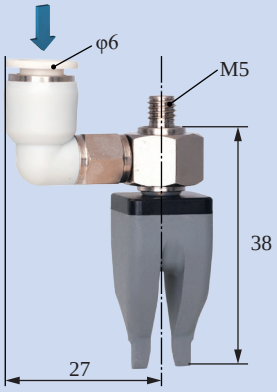

Scara Robotic Arm Installation

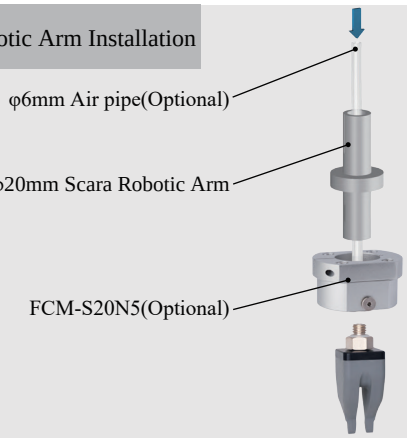

Robotic Arm Flange Side Fitting Installation

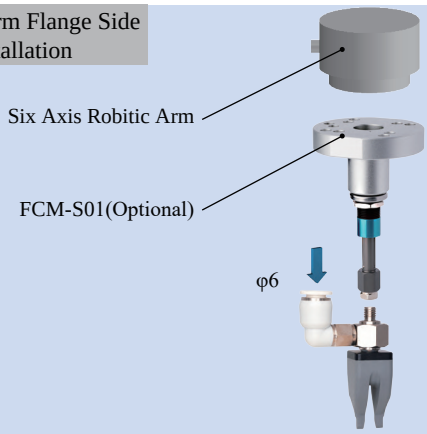

Robotic Arm Flange Side Fitting Installation

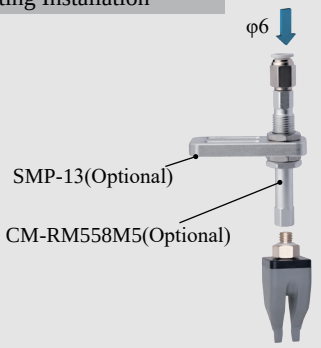

Buffer Installation

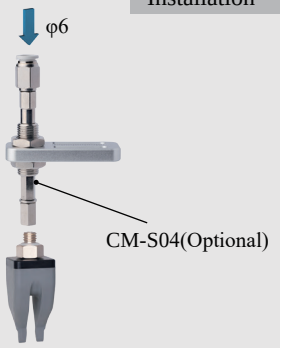

Matrix Installation

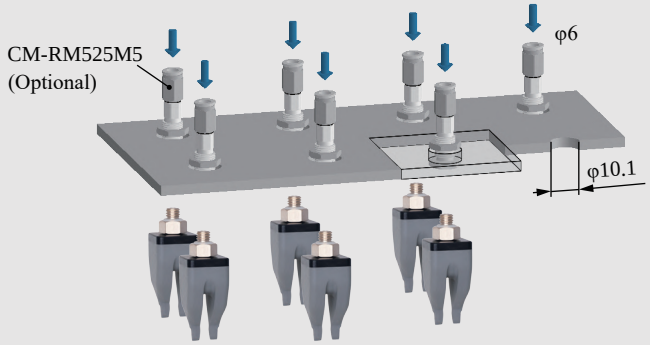

Precise Positioning Installation

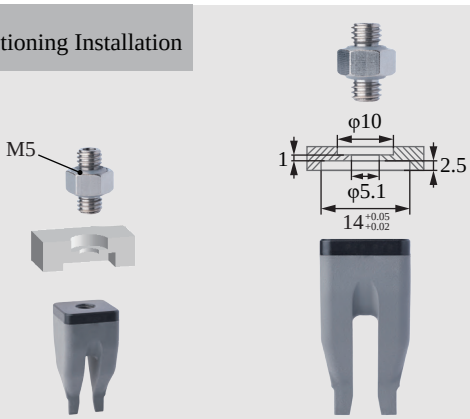

Installation of Optical Fiber Sensors

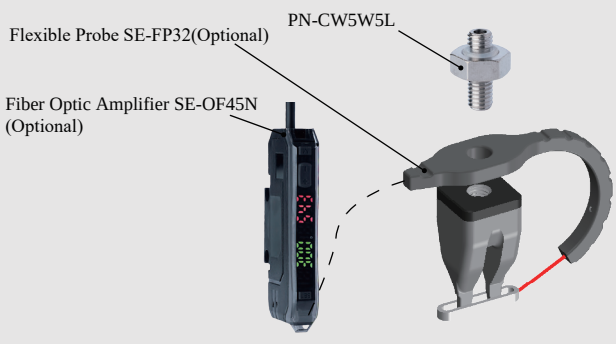



DAC-2NH1107[P]/S Direct-through P Type		DAL-2NH1107[P]/S Side-through P Type	
DAC-2NH1107[PAS]/S Direct-through Dust-free P Type		DAL-2NH1107[PAS]/S Side-through Dust-free P Type	
Weight	4.7g	**Weight**	15g



Product features

- Fingertip open under pressure and clamped in a vacuum. Fingertip distance G can be adjusted by working pressure.It is suggested to be used with Rochu control unit.
- Soft beak material is divided into Normal Material [P] and Dust-free Normal Material [PAS]. When the workpiece is light, or very soft, easy to adhere to adsorp on the soft beak, Dust-free Normal Material [PAS] is preferred.
- Food-grade material, direct food contact approved.

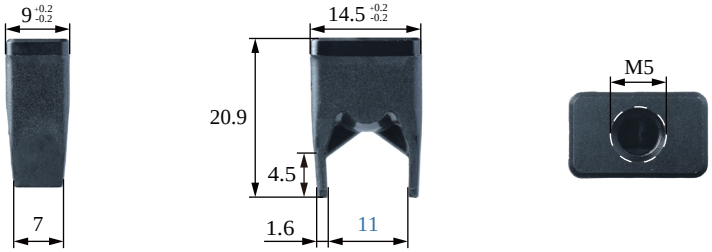

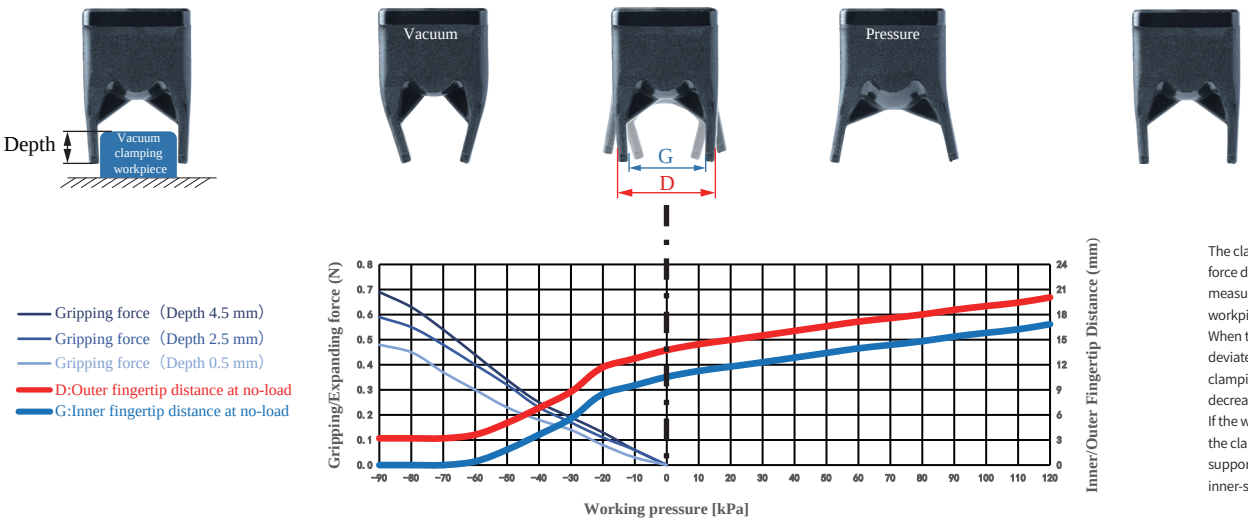

The clamping/inner-supporting force data of this product are measured based on the ideal workpiece size.
When the workpiece size deviates from the ideal value, the clamping/inner-supporting force decreases linearly.
If the workpiece size exceeds the clamping range or inner-supporting range, the clamping/inner-supporting force drops to 0.

Paremeter

Gripping range	8-13mm	Gripping force	0-0.7N	Theoretical gripping load**	0-28g	Ideal gripping workpiece size*	11mm
Internal gripping range	—	Internal gripping force	—	Theoretical internal gripping load**	—	Ideal internal gripping workpiece size*	—
Joint size	M5	Life time***	1.5 million times	Contact Temperature	<220°C	Safe pressure***	<120kPa

*: The width of the cuboid that generates the maximum gripping force (two-finger gripping), the outer diameter of the cylinder (multi-finger gripping), the width of the square hole (two-finger internal gripping), or the inner diameter of the circular hole (multi-finger internal gripping);
**: Only the theoretical load of the ideal workpiece under standard working conditions is marked for reference and comparison. The real load capacity is also affected by factors such as the surface structure and roughness of the workpiece. Please take the measured data as the standard;
***: The working air pressure and the surface roughness of the workpiece in the usage scenario may have different degrees of impact on the life-time. Please configure Rochu control Unit. Do not exceed the safe air pressure.

DAC Straight Fitting Installation

Scan to watch videos



DAL Side Fitting Installation

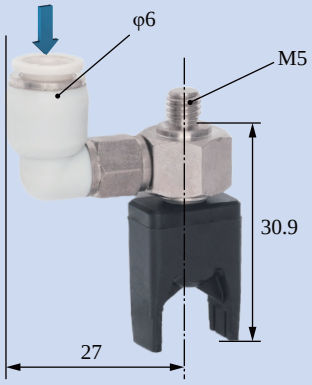

Scara Robotic Arm Installation

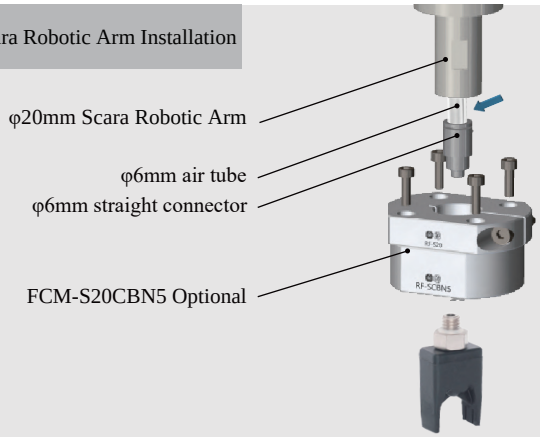

Robotic Arm Flange Side Fitting Installation

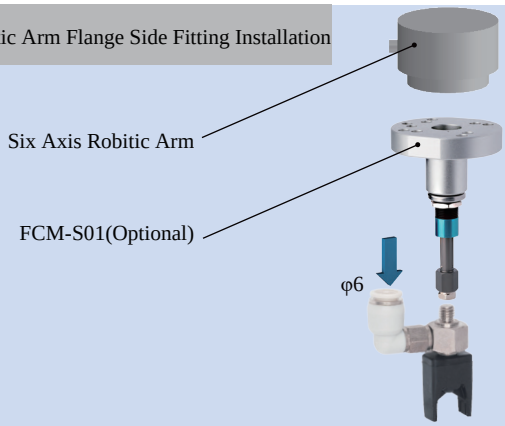

Rigid Connection Installation

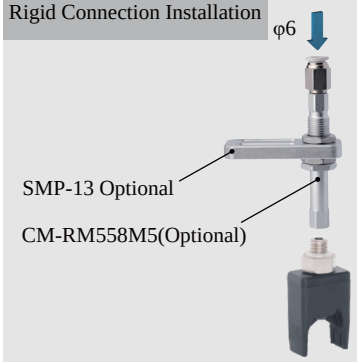

Buffer Installation

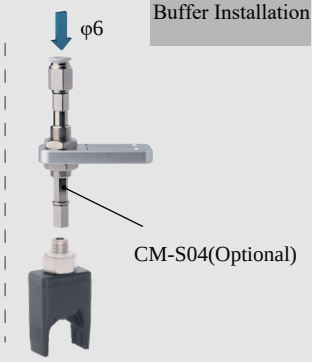

Matrix Installation

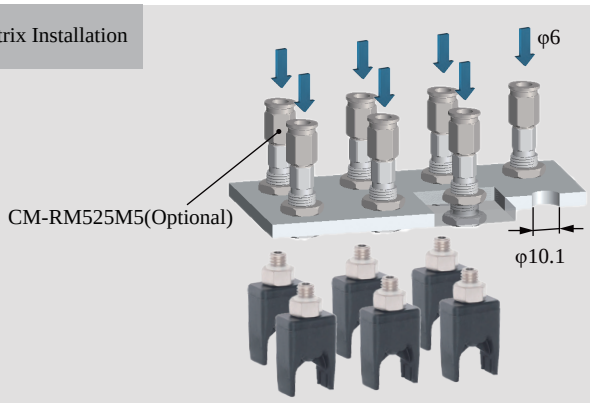

Installation of Optical Fiber Sensors

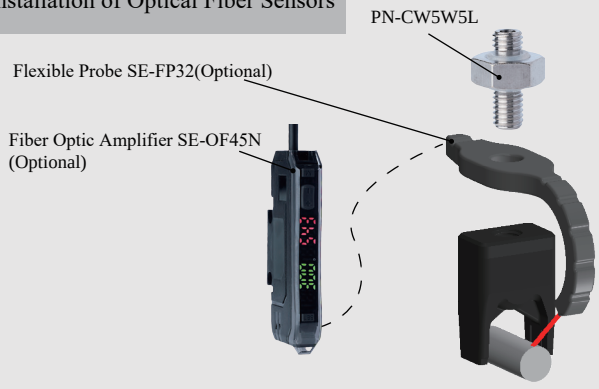

Photoelectric Sensor Installation

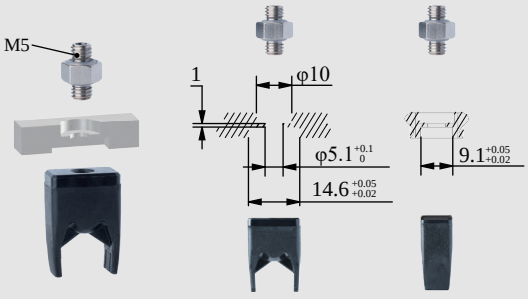

B-2NH1107[P]/S



DAC-20603[H]/S Direct-through H Type		DAL-20603[H]/S Side-through H Type	
DAC-20603[HAS]/S Direct-through Dust-free H Type		DAL-20603[HAS]/S Side-through Dust-free H Type	
Weight	7.3g	Weight	18.8g

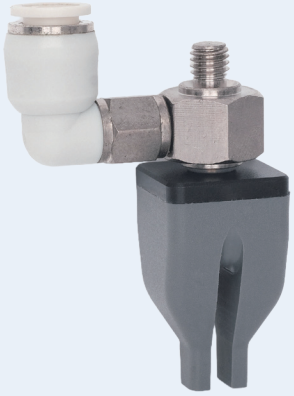

- Fingertip open under pressure and clamped in a vacuum. Inner fingertips distance D can be adjusted by working pressure.It is suggested to be used with Rochu control unit.
- Soft beak material is divided into Normal Material [H] and Dust-free Normal Material [HAS]. When the workpiece is light, or very soft, easy to adhere to adsorp on the soft beak, Dust-free Normal Material [HAS] is preferred.
- Food-grade material, direct food contact approved.



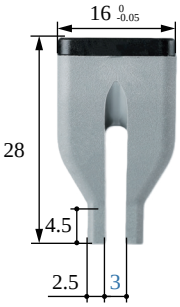

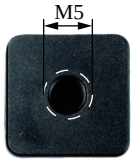

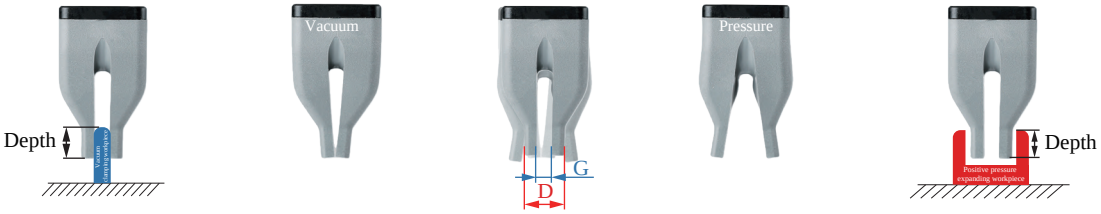

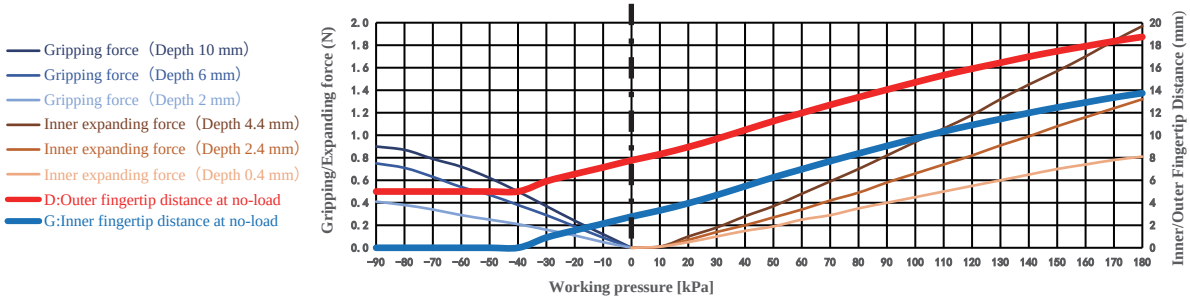

Gripping range	—	Gripping force	0-0.9N	Theoretical gripping load**	0-36g	Ideal gripping workpiece size*	—
Internal gripping range	6-16mm	Internal gripping force	0-2N	Theoretical internal gripping load**	0-79g	Ideal internal gripping workpiece size*	9mm
Joint size	M5	Life time***	1.5 million times	Contact Temperature	<220℃	Safe pressure***	<180kPa

DAC Straight Fitting Installation

Scan to watch videos

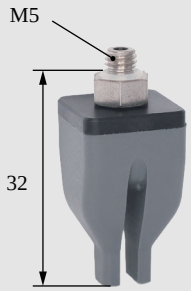

DAL Side Fitting Installation

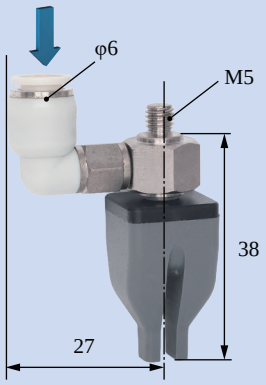

Scara Robotic Arm Installation

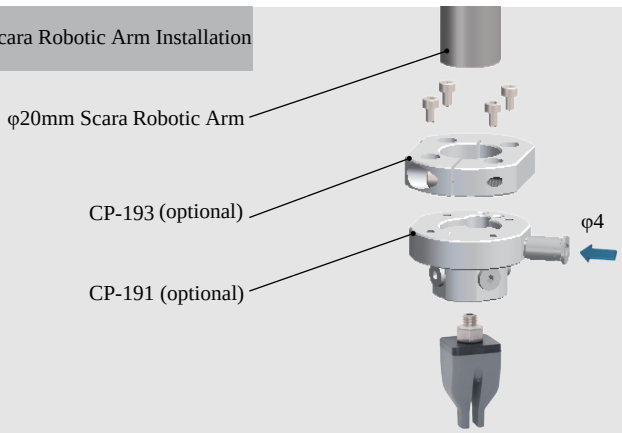

Robotic Arm Flange Side Fitting Installation

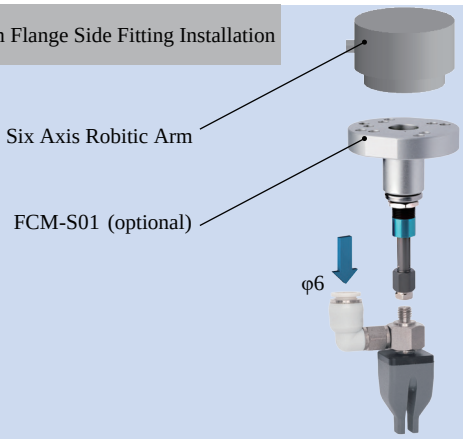

Rigid Connection Installation

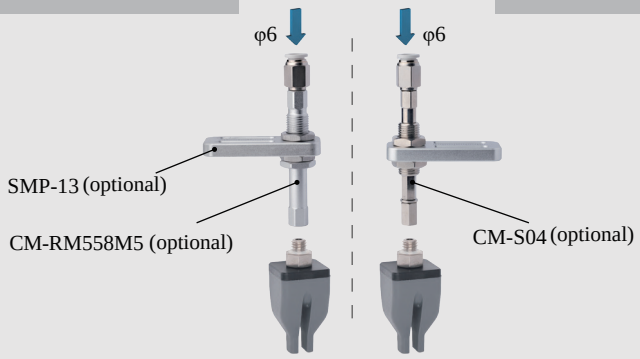

Buffer Installation

Matrix Installation

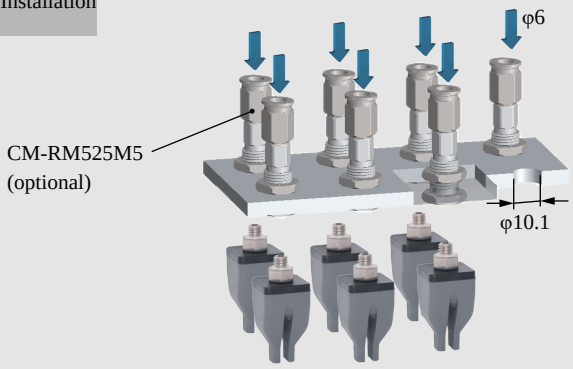

Precise Positioning Installation

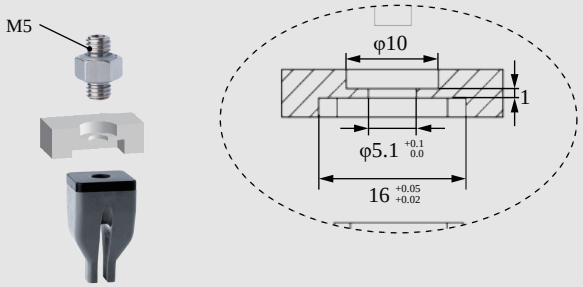

Installation of Optical Fiber Sensors

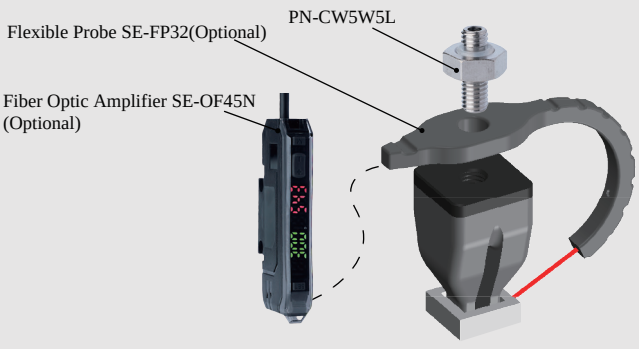

B-20603[H]/S



DAC-2AN0603[LH]/S Direct-through H Type		DAL-2AN0603[LH]/S Side-through H Type	
DAC-2AN0603[LHAS]/S Direct-through Dust-free H Type		DAL-2AN0603[LHAS]/S Side-through Dust-free H Type	
Weight	7.4g	**Weight**	18.2g

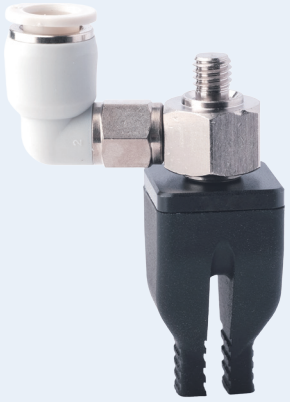

Product features

- Fingertips open under pressure state and clamp in a vacuum. Inner fingertips distance G and outer fingertips distance D can be adjusted by working pressure.It is suggested to be used with Rochu control unit.
- The Anti-static material meets the requirements of the national standard GB/T11210-2014, with a point-to-point resistance of 0.1-1000MΩ. The Anti-static Dust-free type [LHAS] is more suitable for dealing with workpieces that have dustproof requirements or are miniature and lightweight.

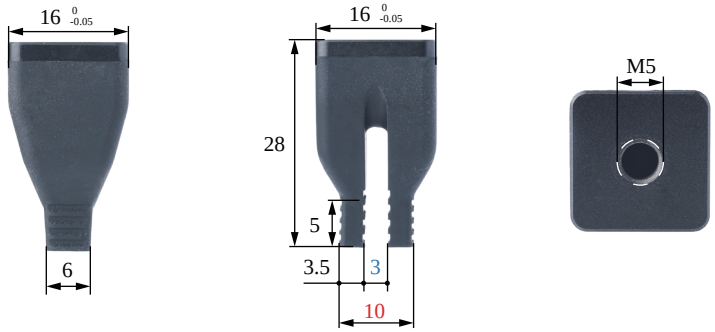

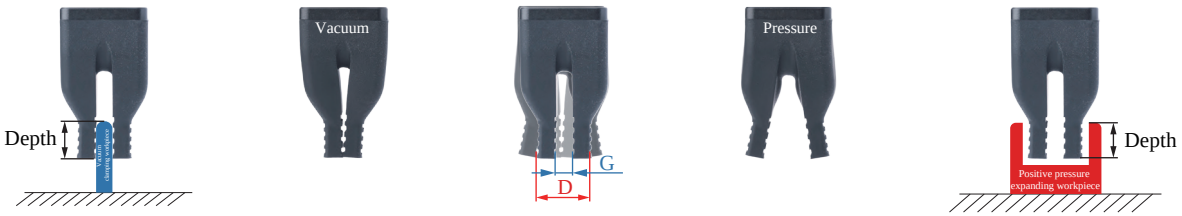

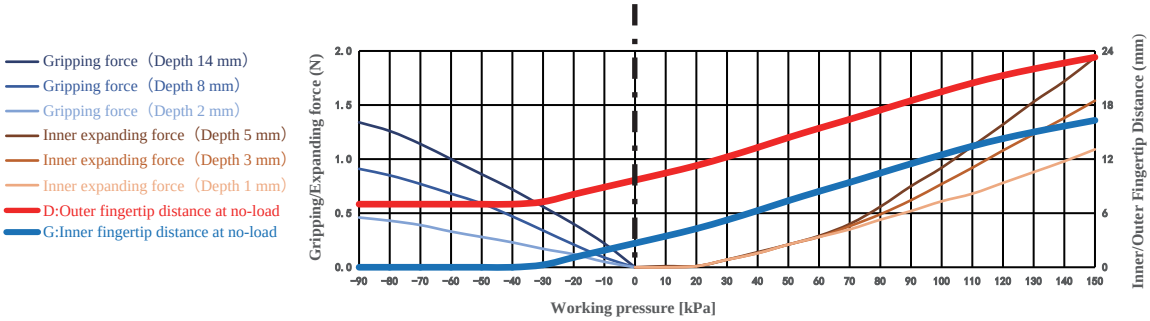

The clamping/inner-supporting force data of this product are measured based on the ideal workpiece size.
When the workpiece size deviates from the ideal value, the clamping/inner-supporting force decreases linearly.
If the workpiece size exceeds the clamping range or inner-supporting range, the clamping/inner-supporting force drops to 0.

Paremeter

Gripping range	2-5mm	Gripping force	0-1.3N	Theoretical gripping load**	0-54g	Ideal gripping workpiece size*	2.5mm
Internal gripping range	6-16mm	Internal gripping force	0-1.9N	Theoretical internal gripping load**	0-78g	Ideal internal gripping workpiece size*	12mm
Joint size	M5	Life time***	1.5 million times	Contact Temperature	<220℃	Safe pressure***	<150kPa

*: The width of the cuboid that generates the maximum gripping force (two-finger gripping), the outer diameter of the cylinder (multi-finger gripping), the width of the square hole (two-finger internal gripping), or the inner diameter of the circular hole (multi-finger internal gripping);
**: Only the theoretical load of the ideal workpiece under standard working conditions is marked for reference and comparison. The real load capacity is also affected by factors such as the surface structure and roughness of the workpiece. Please take the measured data as the standard;
***: The working air pressure and the surface roughness of the workpiece in the usage scenario may have different degrees of impact on the life-time. Please configure Rochu control Unit. Do not exceed the safe air pressure.

DAC Straight Fitting Installation

Scan to watch videos

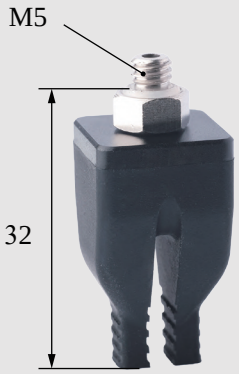

DAL Side Fitting Installation

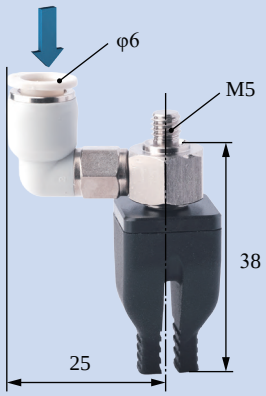

Scara Robotic Arm Installation

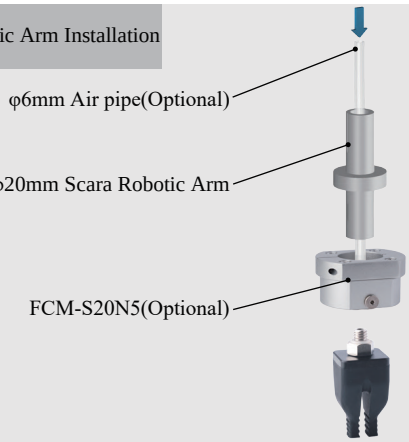

Robotic Arm Flange Side Fitting Installation

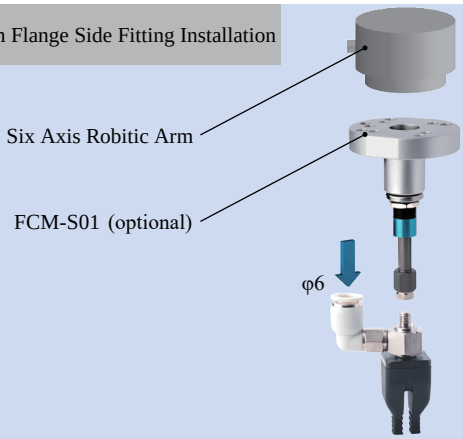

Rigid Connection Installation

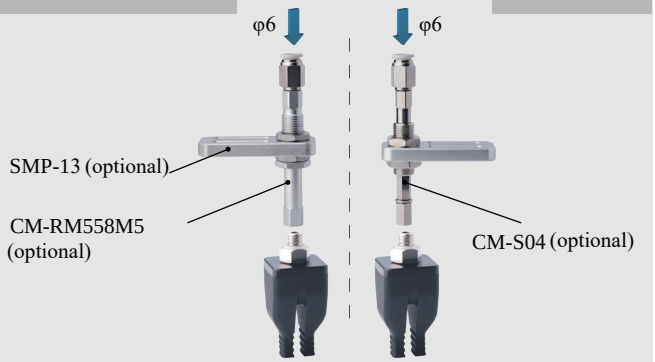

Buffer Installation

Matrix Installation

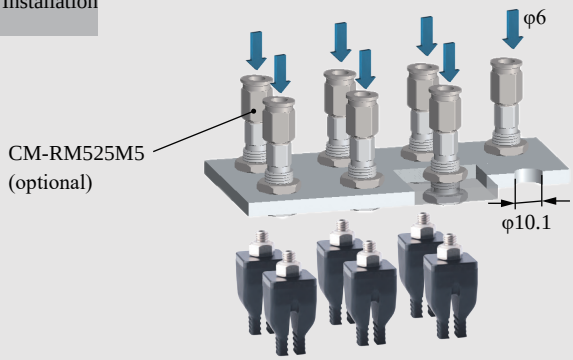

Precise Positioning Installation

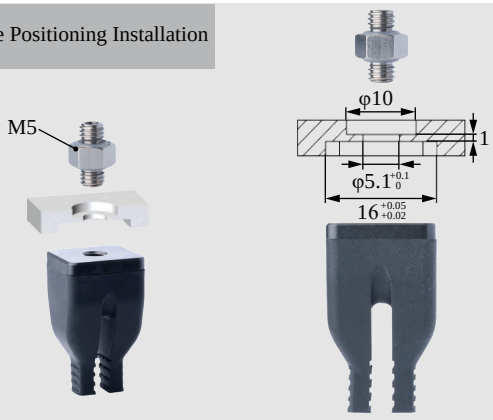

Installation of Optical Fiber Sensors

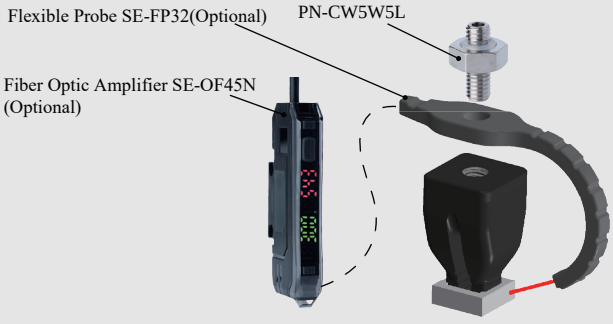

B-2AN0603[LH]/S

	DAC-2G0712[LH]/S Direct-through Anti-static P Type		DAL-2G0712[LH]/S Side-through P Type	
	**Weight**	8g	**Weight**	19.1g



Product features

- Fingertips open under pressure state and clamp in a vacuum. Inner fingertips distance G and outer fingertips distance D can be adjusted by working pressure.It is suggested to be used with Rochu control unit.
- The Anti-static material meets the requirements of the national standard GB/T11210-2014, with a point-to-point resistance of 0.1-1000MΩ. The Anti-static Dust-free type [LHAS] is more suitable for dealing with workpieces that have dustproof requirements or are miniature and lightweight.

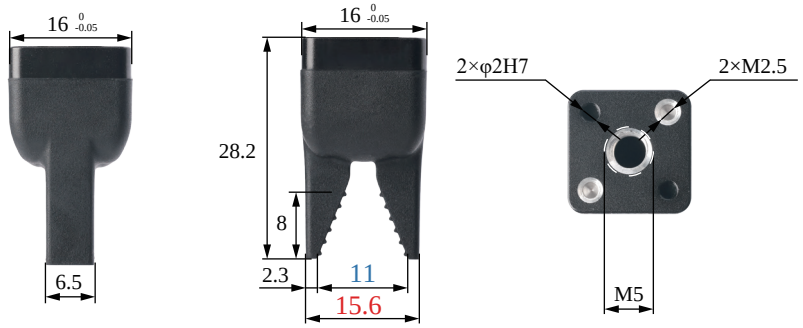



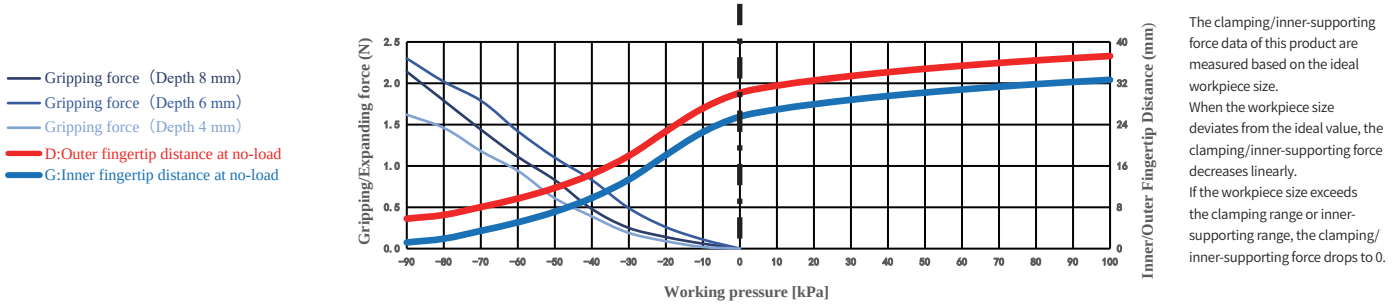

The clamping/inner-supporting force data of this product are measured based on the ideal workpiece size.
When the workpiece size deviates from the ideal value, the clamping/inner-supporting force decreases linearly.
If the workpiece size exceeds the clamping range or inner-supporting range, the clamping/inner-supporting force drops to 0.

Paremeter

Gripping range	0-10mm	Gripping force	0-2.3N	Theoretical gripping load**	0-92g	Ideal gripping workpiece size*	5mm
Internal gripping range	—	Internal gripping force	—	Theoretical internal gripping load**	—	Ideal internal gripping workpiece size*	—
Joint size	M5	Life time***	1.5 million times	Contact Temperature	<220℃	Safe pressure***	Use under single negative pressure

*: The width of the cuboid that generates the maximum gripping force (two-finger gripping), the outer diameter of the cylinder (multi-finger gripping), the width of the square hole (two-finger internal gripping), or the inner diameter of the circular hole (multi-finger internal gripping);
**: Only the theoretical load of the ideal workpiece under standard working conditions is marked for reference and comparison. The real load capacity is also affected by factors such as the surface structure and roughness of the workpiece. Please take the measured data as the standard;
***: The working air pressure and the surface roughness of the workpiece in the usage scenario may have different degrees of impact on the life-time. Please configure Rochu control Unit. Do not exceed the safe air pressure.

DAC Straight Fitting Installation

Scan to watch videos



DAL Side Fitting Installation

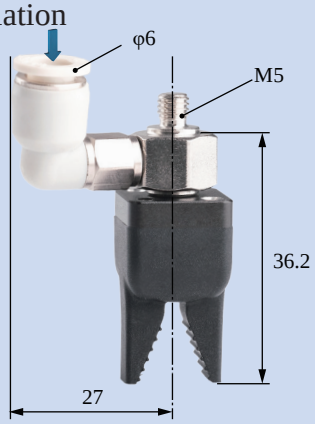

Scara Robotic Arm Installation

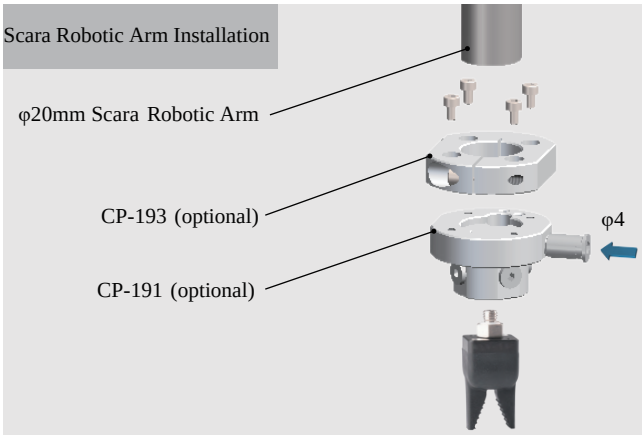

Robotic Arm Flange Side Fitting Installation

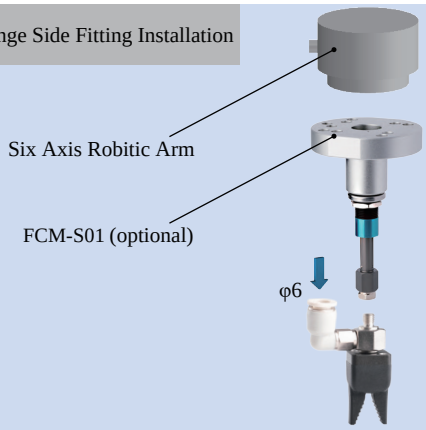

Rigid Connection Installation

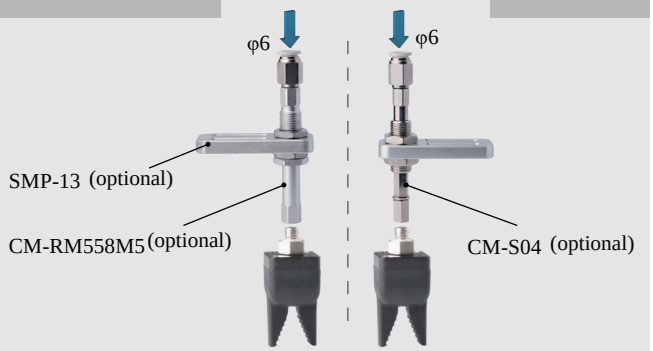

Buffer Installation

Matrix Installation

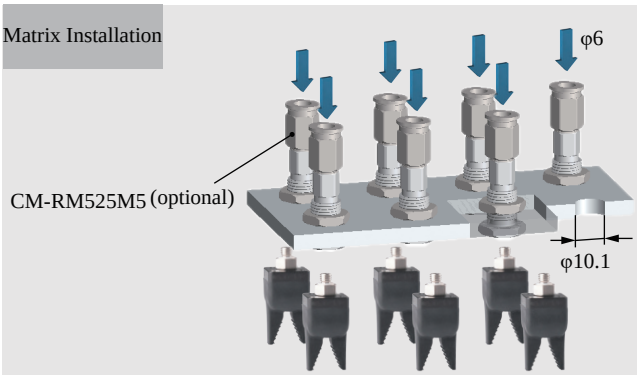

Installation of Optical Fiber Sensors



B-2G0712[LH]/S

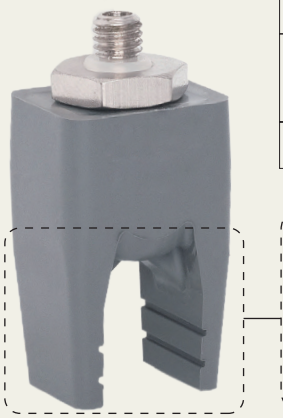

DAC-2G1211[H] Direct-through H Type		DAL-2G1211[H] Side-through H Type	
DAC-2G1211[HAS] Direct-through Dust-free H Type		DAL-2G1211[HAS] Side-through Dust-free H Type	
Weight	11.3g	**Weight**	19.7g

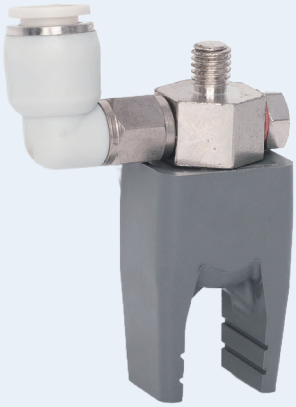

Product features

- Fingertip open under pressure and clamped in a vacuum. Inner fingertips distance D can be adjusted by working pressure.It is suggested to be used with Rochu control unit.
- Soft beak material is divided into Normal Material [H] and Dust-free Normal Material [HAS]. When the workpiece is light, or very soft, easy to adhere to adsorp on the soft beak, Dust-free Normal Material [HAS] is preferred.
- Food-grade material, direct food contact approved.

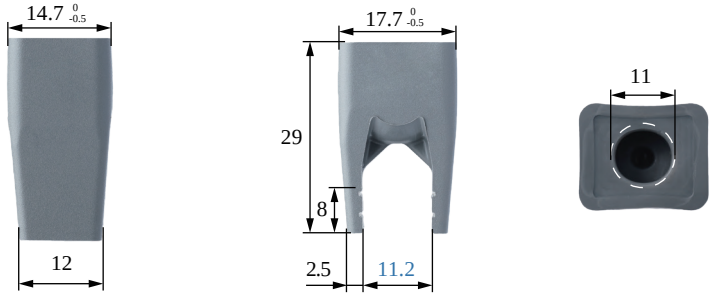

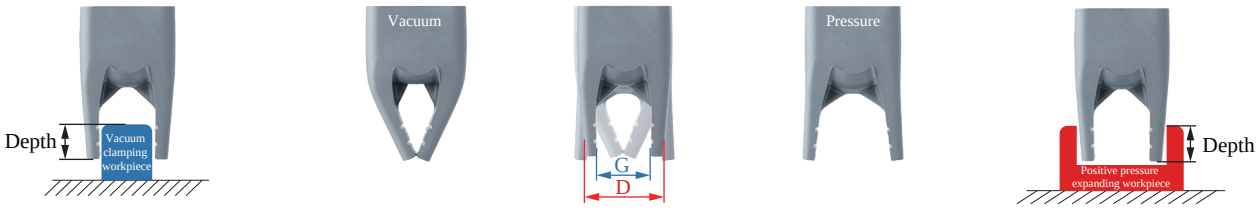

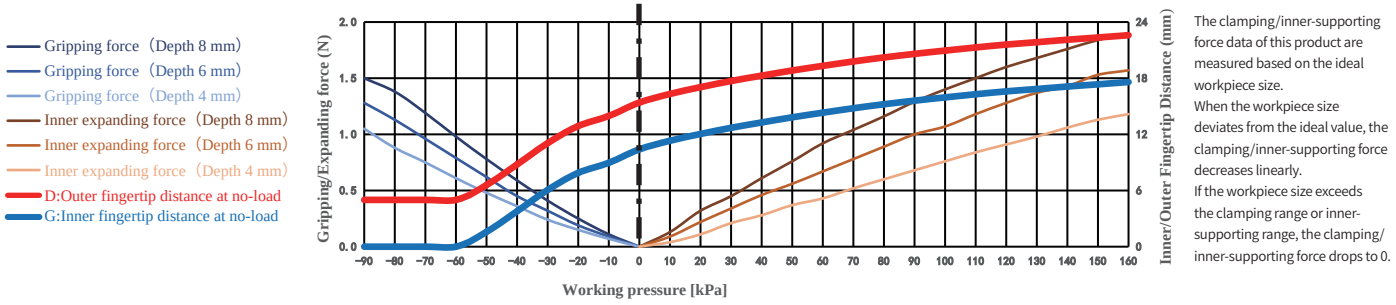

The clamping/inner-supporting force data of this product are measured based on the ideal workpiece size.
When the workpiece size deviates from the ideal value, the clamping/inner-supporting force decreases linearly.
If the workpiece size exceeds the clamping range or inner-supporting range, the clamping/inner-supporting force drops to 0.

Paremeter

Gripping range	0-13.3mm	Gripping force	0-1.5N	Theoretical gripping load**	0-60g	Ideal gripping workpiece size*	11.2mm
Internal gripping range	15-20mm	Internal gripping force	0-1.9N	Theoretical internal gripping load**	0-76g	Ideal internal gripping workpiece size*	16mm
Joint size	M5	Life time***	1.5 million times	Contact Temperature	<220°C	Safe pressure***	<160kPa

*: The width of the cuboid that generates the maximum gripping force (two-finger gripping), the outer diameter of the cylinder (multi-finger gripping), the width of the square hole (two-finger internal gripping), or the inner diameter of the circular hole (multi-finger internal gripping);
**: Only the theoretical load of the ideal workpiece under standard working conditions is marked for reference and comparison. The real load capacity is also affected by factors such as the surface structure and roughness of the workpiece. Please take the measured data as the standard;
***: The working air pressure and the surface roughness of the workpiece in the usage scenario may have different degrees of impact on the life-time. Please configure Rochu control Unit. Do not exceed the safe air pressure.

DAC Straight Fitting Installation

Scan to watch videos



DAL Side Fitting Installation

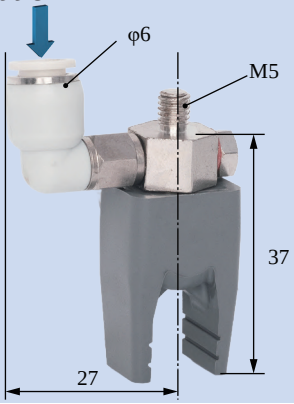

Scara Robotic Arm Installation

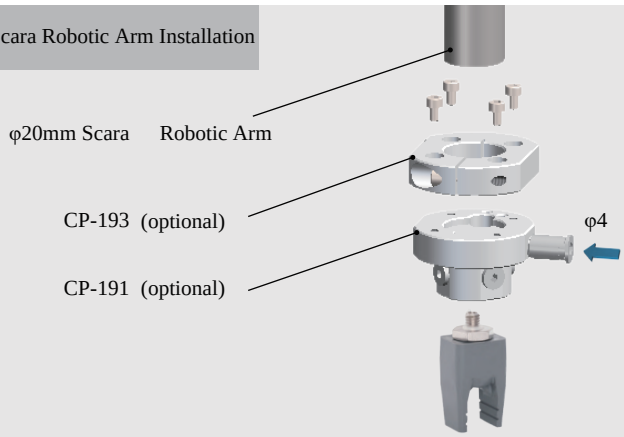

Robotic Arm Flange Side Fitting Installation

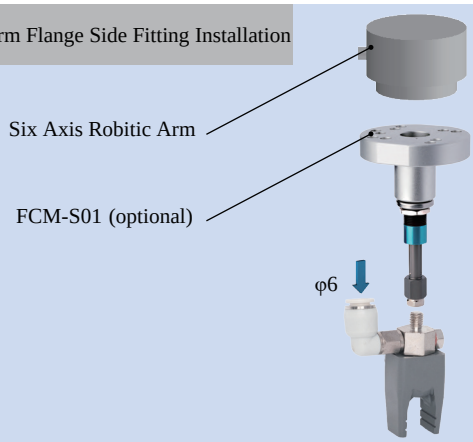

Rigid Connection Installation

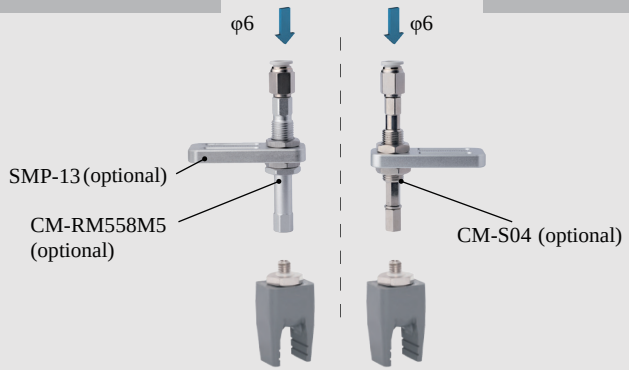

Buffer Installation

Matrix Installation

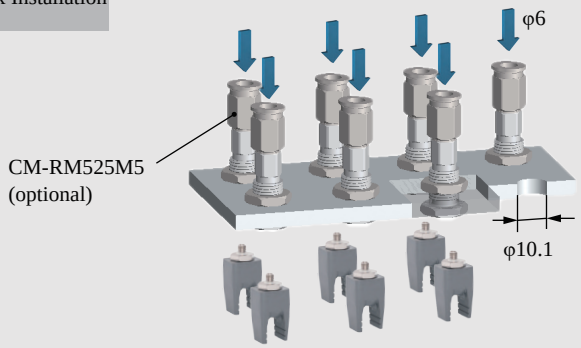

Installation of Optical Fiber Sensors

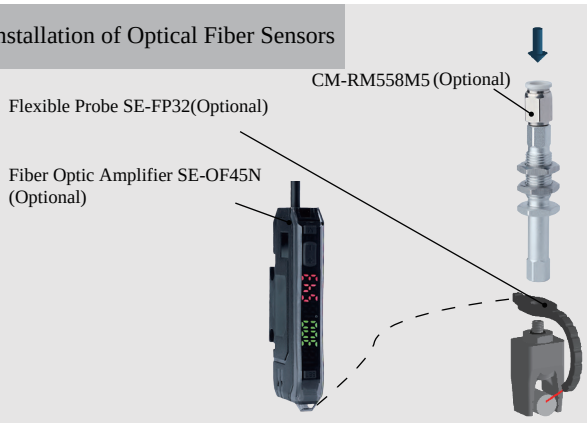



DAC-2G1211[LH] Direct-through Anti-static H Type		DAL-2G1211[LH] Side-through Anti-static H Type	
DAC-2G1211[LHAS] Direct-through Anti-static Dust-free H Type		DAL-2G1211[LHAS] Side-through Anti-static Dust-free H Type	
Weight	11.3g	**Weight**	19.7g



Product features

- Fingertips open under pressure state and clamp in a vacuum. Inner fingertips distance G and outer fingertips distance D can be adjusted by working pressure.It is suggested to be used with Rochu control unit.
- The Anti-static material meets the requirements of the national standard GB/T11210-2014, with a point-to-point resistance of 0.1-1000MΩ. The Anti-static Dust-free type [LHAS] is more suitable for dealing with workpieces that have dustproof requirements or are miniature and lightweight.

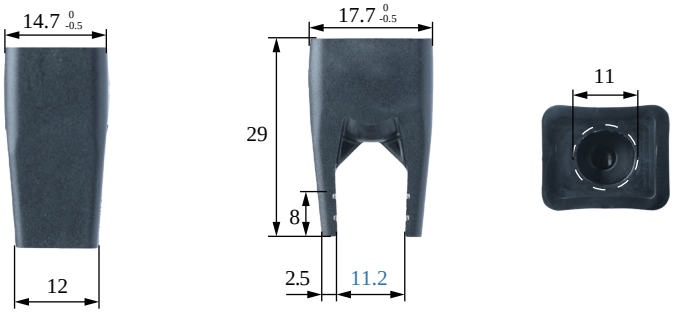

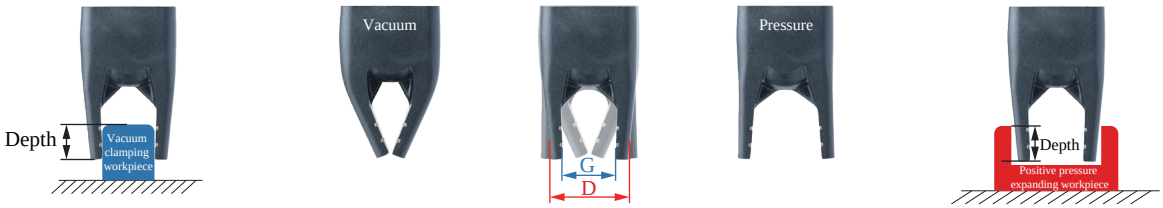

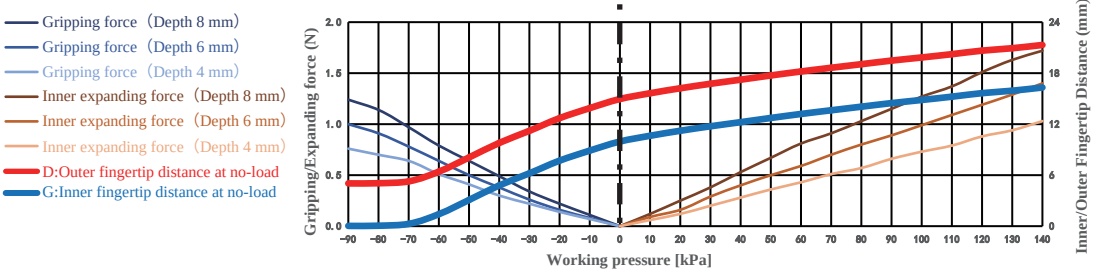

The clamping/inner-supporting force data of this product are measured based on the ideal workpiece size.
When the workpiece size deviates from the ideal value, the clamping/inner-supporting force decreases linearly.
If the workpiece size exceeds the clamping range or inner-supporting range, the clamping/inner-supporting force drops to 0.

Paremeter

Gripping range	0-13.3mm	Gripping force	0-1.2N	Theoretical gripping load**	0-50g	Ideal gripping workpiece size*	11.2mm
Internal gripping range	15-20mm	Internal gripping force	0-1.7N	Theoretical internal gripping load**	0-69g	Ideal internal gripping workpiece size*	16mm
Joint size	M5	Life time***	1.5 million times	Contact Temperature	<220°C	Safe pressure***	<140kPa

*: The width of the cuboid that generates the maximum gripping force (two-finger gripping), the outer diameter of the cylinder (multi-finger gripping), the width of the square hole (two-finger internal gripping), or the inner diameter of the circular hole (multi-finger internal gripping);
**: Only the theoretical load of the ideal workpiece under standard working conditions is marked for reference and comparison. The real load capacity is also affected by factors such as the surface structure and roughness of the workpiece. Please take the measured data as the standard;
***: The working air pressure and the surface roughness of the workpiece in the usage scenario may have different degrees of impact on the life-time. Please configure Rochu control Unit. Do not exceed the safe air pressure.

DAC Straight Fitting Installation

Scan to watch videos



DAL Side Fitting Installation

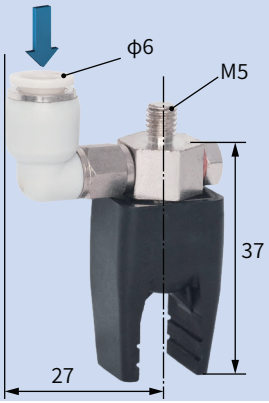

Scara Robotic Arm Installation

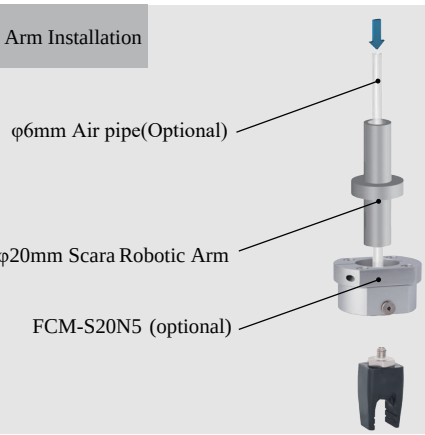

Robotic Arm Flange Side Fitting Installation

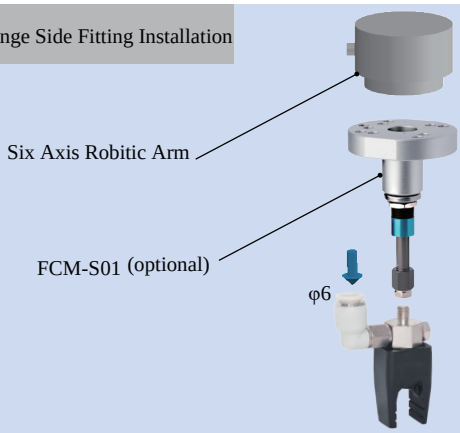

Rigid Connection Installation

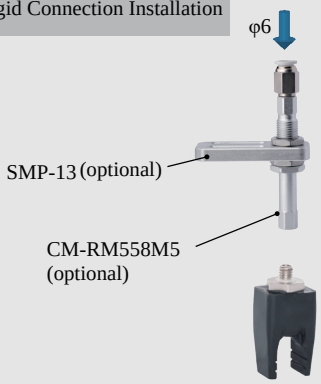

Buffer Installation



Matrix Installation

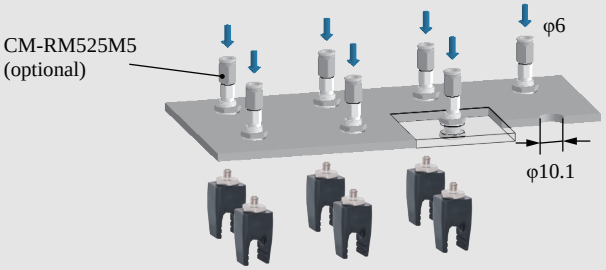

Installation of Optical Fiber Sensors

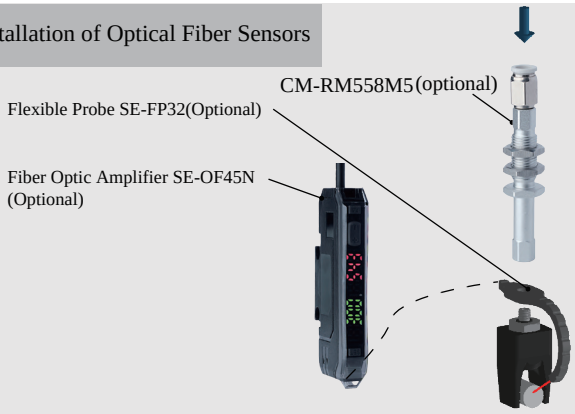



DAC-20802[P] Direct-through P Type		DAL-20802[P] Side-through P Type	
DAC-20802[PAS] Direct-through Dust-free P Type		DAL-20802[PAS] Side-through Dust-free P Type	
Weight	13.1g	Weight	21.5g



- Fingertip open under pressure and clamped in a vacuum. Fingertip distance G can be adjusted by working pressure.It is suggested to be used with Rochu control unit.
- Soft beak material is divided into Normal Material [P] and Dust-free Normal Material [PAS]. When the workpiece is light, or very soft, easy to adhere to adsorp on the soft beak, Dust-free Normal Material [PAS] is preferred.
- Food-grade material, direct food contact approved.

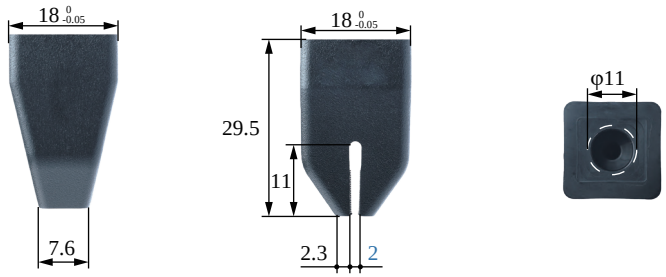

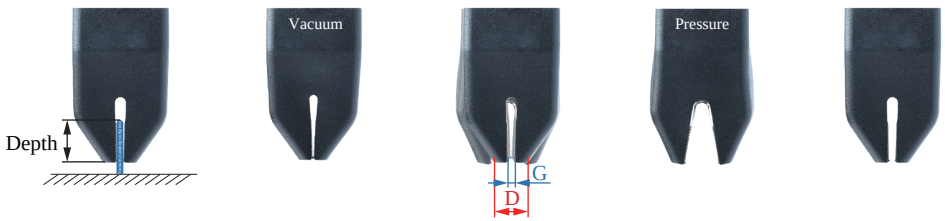

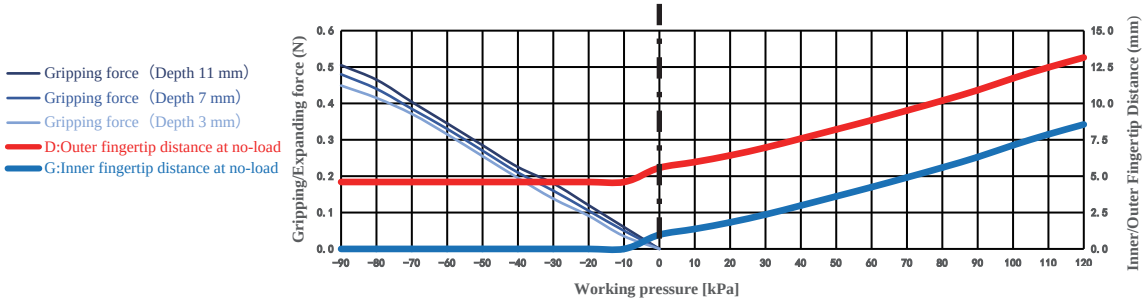

Gripping range	0-4mm	Gripping force	0-0.5N	Theoretical gripping load**	0-20g	Ideal gripping workpiece size*	2mm
Internal gripping range	—	Internal gripping force	—	Theoretical internal gripping load**	—	Ideal internal gripping workpiece size*	—
Joint size	M5	Life time***	1.5 million times	Contact Temperature	<220℃	Safe pressure***	<120kPa

DAC Straight Fitting Installation

Scan to watch videos

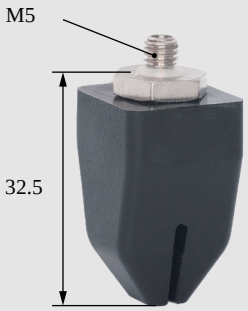

DAL Side Fitting Installation

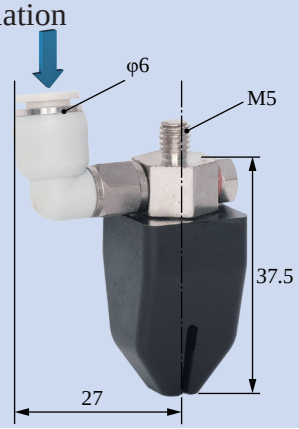

Scara Robotic Arm Installation

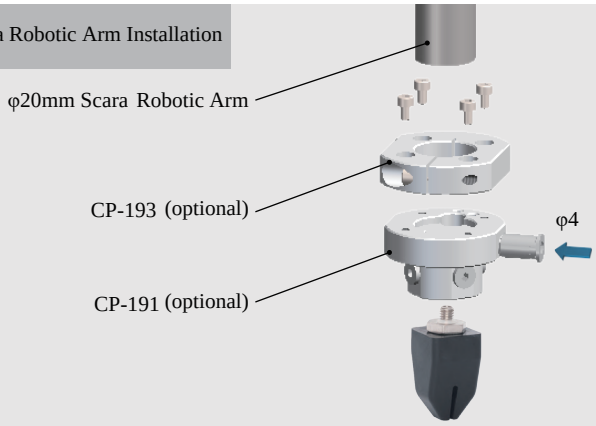

Robotic Arm Flange Side Fitting Installation

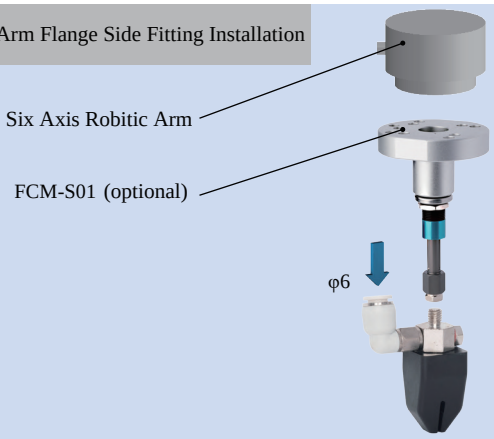

Rigid Connection Installation

Buffer Installation

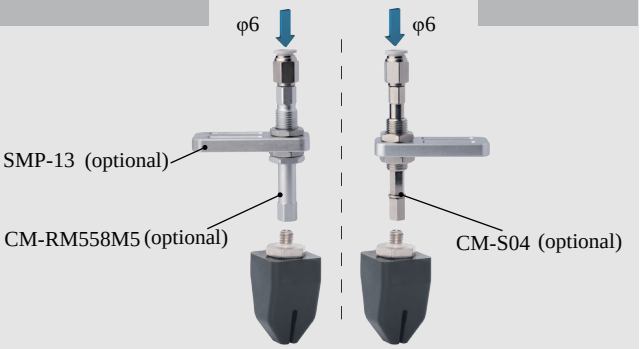

Matrix Installation

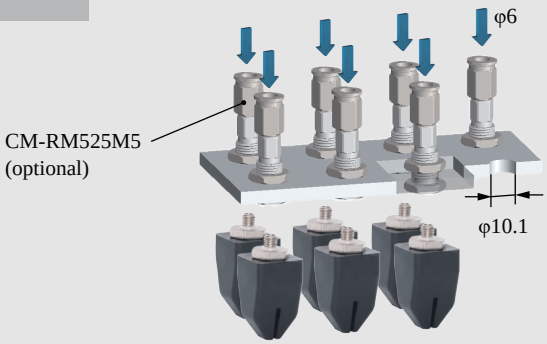

Installation of Optical Fiber Sensors

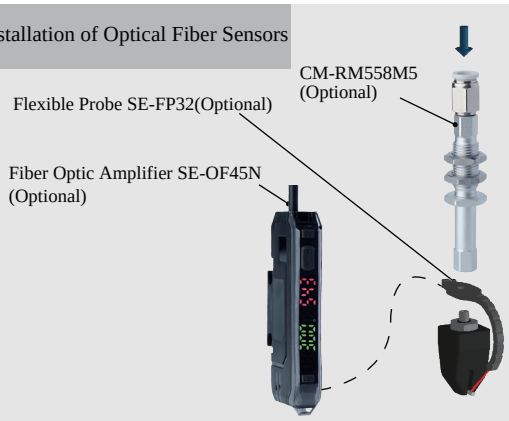



DAC-20802[LP] Direct-through Anti-static P Type		DAL-20802[LP] Side-through P Type	
DAC-20802[LP] Direct-through Anti-static Dust-free P Type		DAL-20802[LP] Side-through Anti-static Dust-free P Type	
Weight	13.1g	**Weight**	21.5g



Product features

- Fingertips open under pressure state and clamp in a vacuum. Inner fingertips distance G and outer fingertips distance D can be adjusted by working pressure.It is suggested to be used with Rochu control unit.
- The Anti-static material meets the requirements of the national standard GB/T11210-2014, with a point-to-point resistance of 0.1-1000MΩ. The Anti-static Dust-free type [LHAS] is more suitable for dealing with workpieces that have dustproof requirements or are miniature and lightweight.

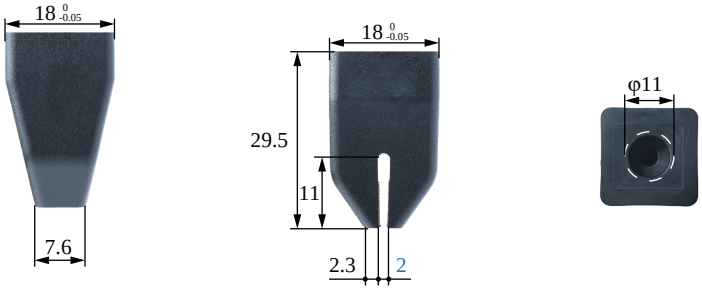

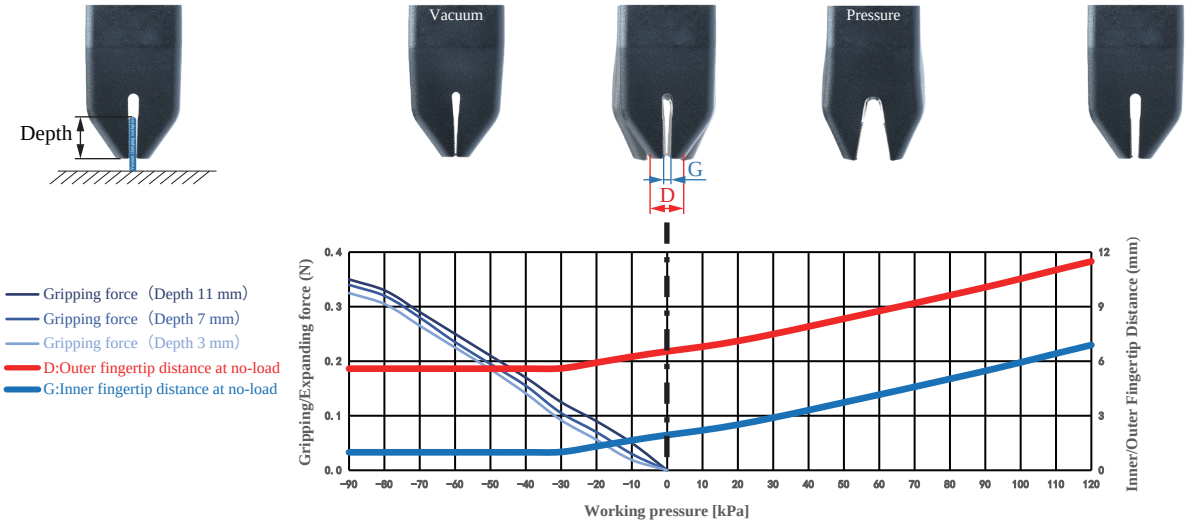

The clamping/inner-supporting force data of this product are measured based on the ideal workpiece size.
When the workpiece size deviates from the ideal value, the clamping/inner-supporting force decreases linearly.
If the workpiece size exceeds the clamping range or inner-supporting range, the clamping/inner-supporting force drops to 0.

Paremeter

Gripping range	0-4mm	Gripping force	0-0.4N	Theoretical gripping load**	0-14g	Ideal gripping workpiece size*	2mm
Internal gripping range	—	Internal gripping force	—	Theoretical internal gripping load**	—	Ideal internal gripping workpiece size*	—
Joint size	M5	Life time***	1.5 million times	Contact Temperature	<220℃	Safe pressure***	<120kPa

*: The width of the cuboid that generates the maximum gripping force (two-finger gripping), the outer diameter of the cylinder (multi-finger gripping), the width of the square hole (two-finger internal gripping), or the inner diameter of the circular hole (multi-finger internal gripping);
**: Only the theoretical load of the ideal workpiece under standard working conditions is marked for reference and comparison. The real load capacity is also affected by factors such as the surface structure and roughness of the workpiece. Please take the measured data as the standard;
***: The working air pressure and the surface roughness of the workpiece in the usage scenario may have different degrees of impact on the life-time. Please configure Rochu control Unit. Do not exceed the safe air pressure.

DAC Straight Fitting Installation

Scan to watch videos

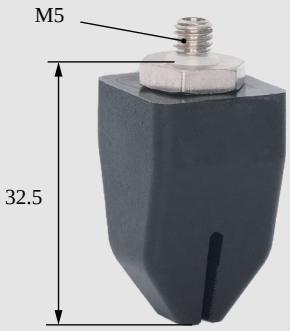

DAL Side Fitting Installation

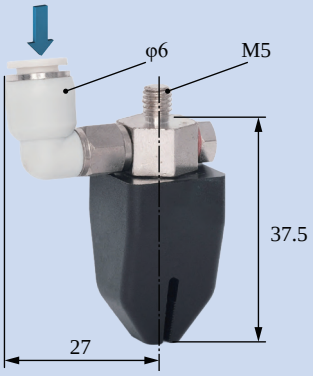

Scara Robotic Arm Installation

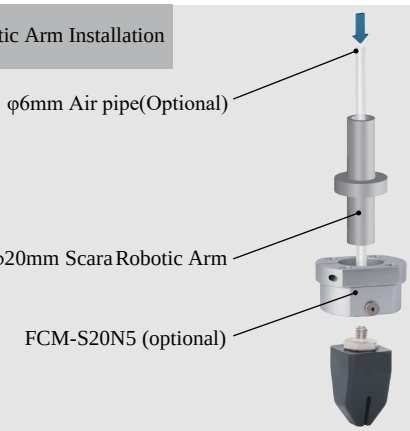

Robotic Arm Flange Side Fitting Installation

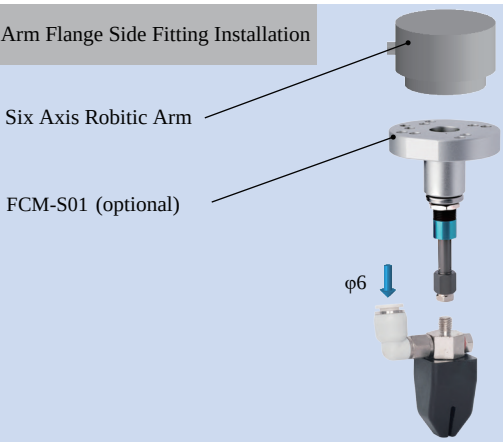

Rigid Connection Installation

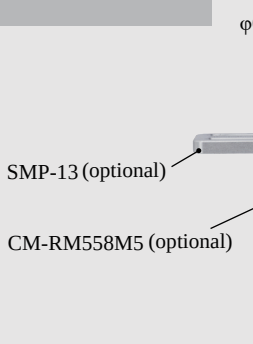

Buffer Installation



Matrix Installation

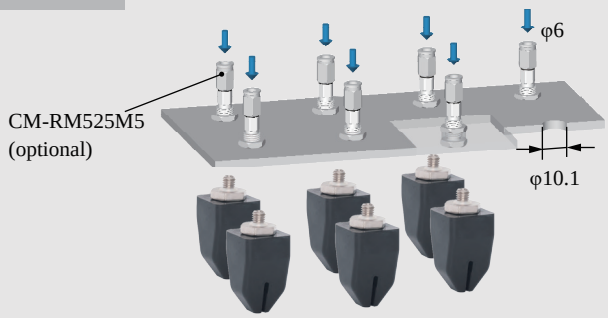

Installation of Optical Fiber Sensors

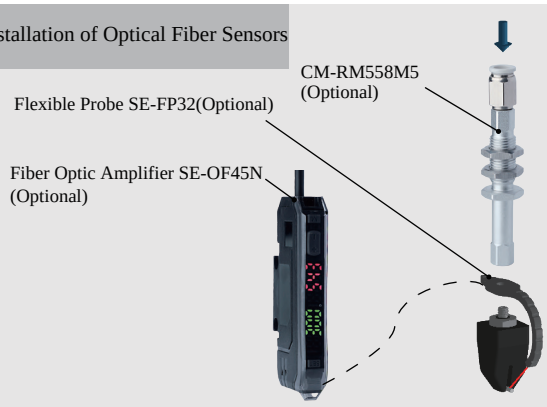

	DAC-21608[P] Direct-through P Type		DAL-21608[P] Side-through P Type		
	DAC-21608[PAS] Direct-through Dust-free P Type		DAL-21608[PAS] Side-through Dust-free P Type		
	Weight	13g	Weight	21.4g	

- Fingertip open under pressure and clamped in a vacuum. Fingertip distance G can be adjusted by working pressure.It is suggested to be used with Rochu control unit.
- Soft beak material is divided into Normal Material [P] and Dust-free Normal Material [PAS]. When the workpiece is light, or very soft, easy to adhere to adsorp on the soft beak, Dust-free Normal Material [PAS] is preferred.
- Food-grade material, direct food contact approved.

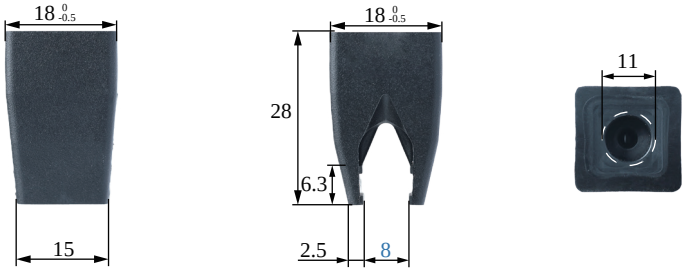

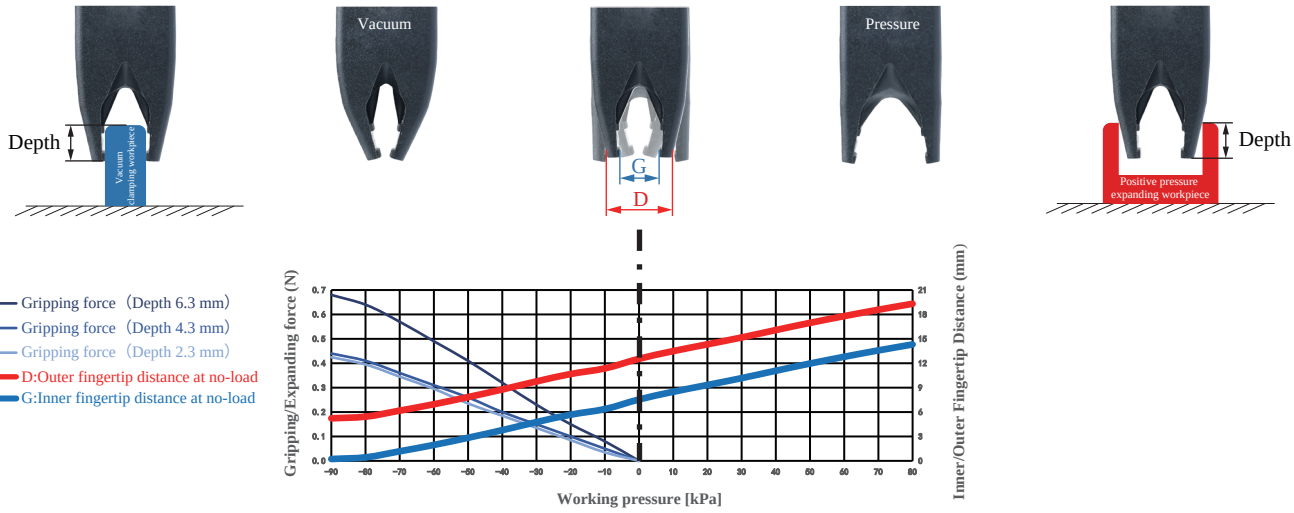

Gripping range	2-12mm	Gripping force	0-0.7N	Theoretical gripping load**	0-27g	Ideal gripping workpiece size*	8mm
Internal gripping range	—	Internal gripping force	—	Theoretical internal gripping load**	—	Ideal internal gripping workpiece size*	—
Joint size	M5	Life time***	1.5 million times	Contact Temperature	<220°C	Safe pressure***	<80kPa

DAC Straight Fitting Installation

Scan to watch videos

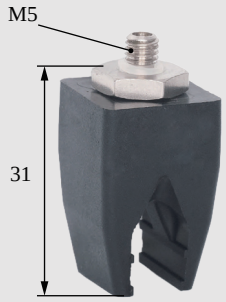

DAL Side Fitting Installation

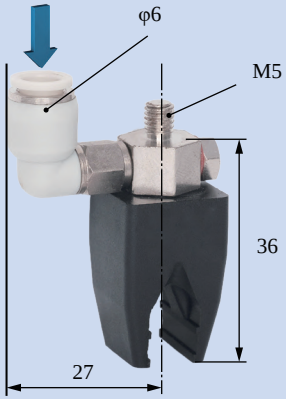

Scara Robotic Arm Installation

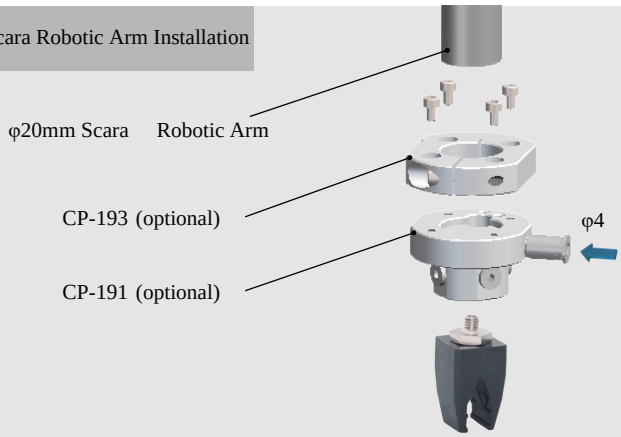

Robotic Arm Flange Side Fitting Installation

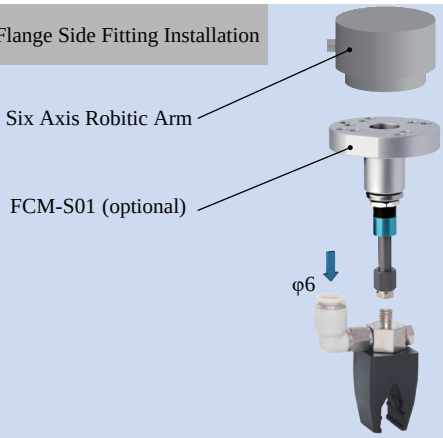

Rigid Connection Installation

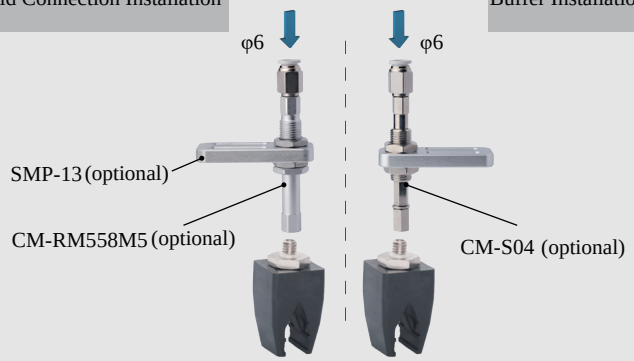

Buffer Installation

Matrix Installation

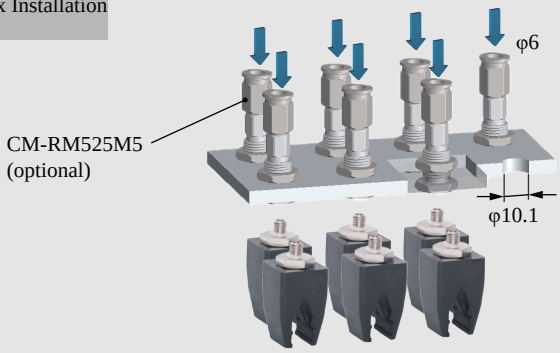

Installation of Optical Fiber Sensors

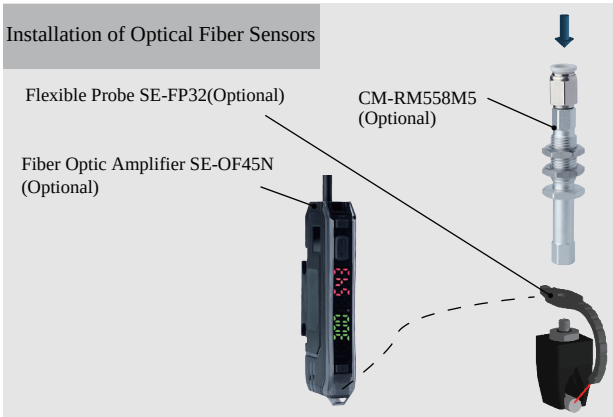

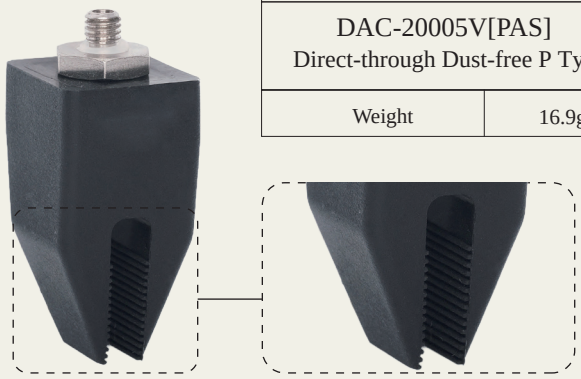

DAC-20005V[P] Direct-through P Type		DAL-20005V[P] Side-through P Type	
DAC-20005V[PAS] Direct-through Dust-free P Type		DAL-20005V[PAS] Side-through Dust-free P Type	
Weight	16.9g	Weight	25.6g



- Fingertip open under pressure and clamped in a vacuum. Fingertip distance G can be adjusted by working pressure.It is suggested to be used with Rochu control unit.
- Soft beak material is divided into Normal Material [P] and Dust-free Normal Material [PAS]. When the workpiece is light, or very soft, easy to adhere to adsorp on the soft beak, Dust-free Normal Material [PAS] is preferred.
- Food-grade material, direct food contact approved.

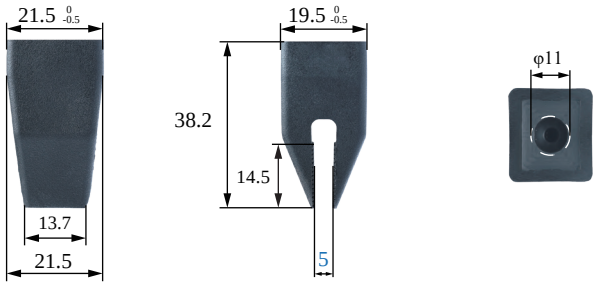

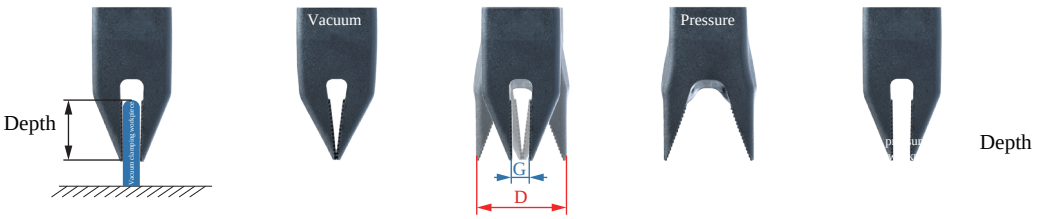

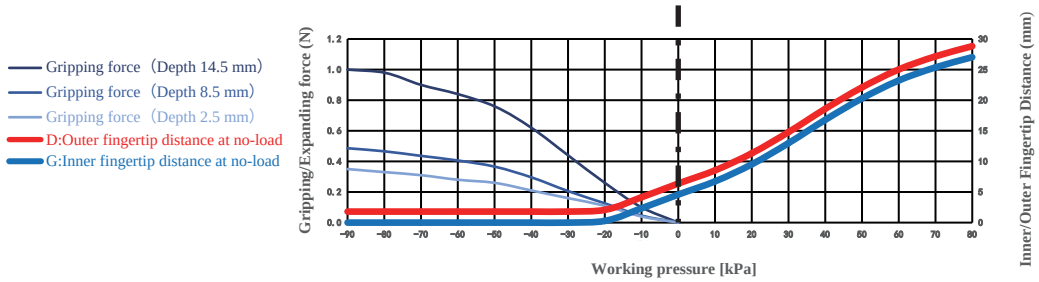

Gripping range	0-15mm	Gripping force	0-1N	Theoretical gripping load**	0-40g	Ideal gripping workpiece size*	5mm
Internal gripping range	—	Internal gripping force	—	Theoretical internal gripping load**	—	Ideal internal gripping workpiece size*	—
Joint size	M5	Life time***	1.5 million times	Contact Temperature	<220°C	Safe pressure***	<80kPa

DAC Straight Fitting Installation

Scan to watch videos

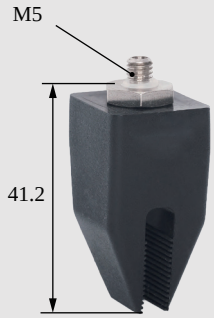

DAL Side Fitting Installation

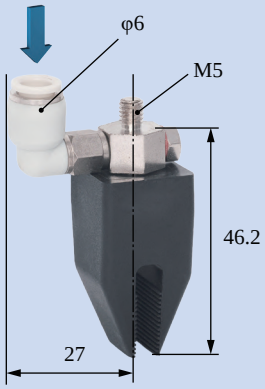

Scara Robotic Arm Installation



Robotic Arm Flange Side Fitting Installation

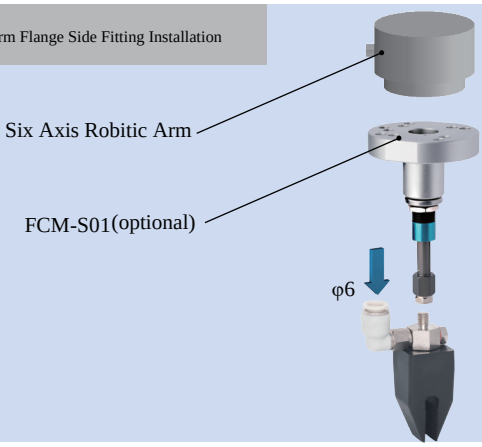

Rigid Connection Installation

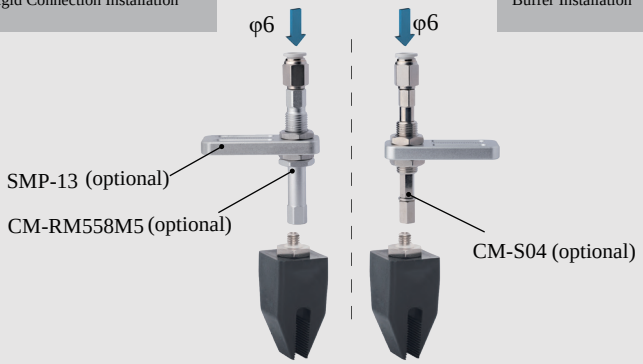

Buffer Installation

Matrix Installation

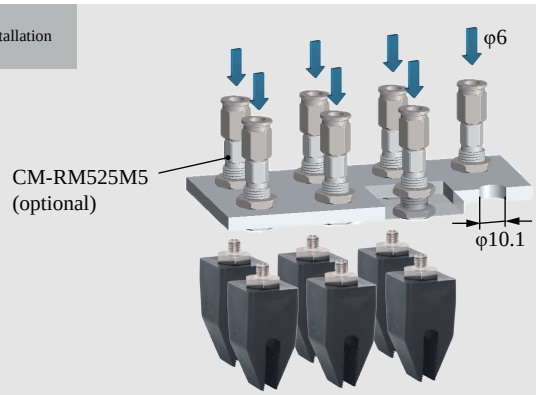

Installation of Optical Fiber Sensors

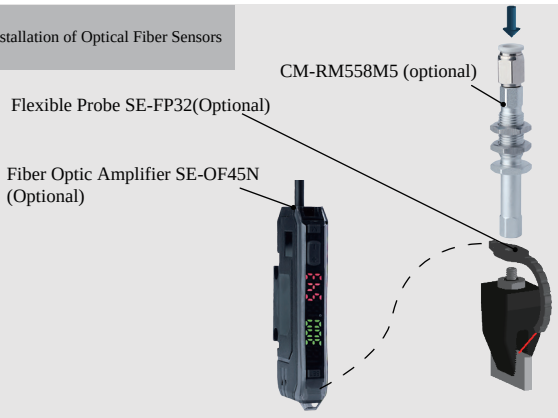



DAC-20005V[H] Direct-through H Type		DAL-20005V[H] Side-through H Type	
DAC-20005V[H] Direct-through Dust-free H Type		DAL-20005V[H] Side-through Dust-free H Type	
Weight	16.9g	**Weight**	25.6g



Product features

- Fingertip open under pressure and clamped in a vacuum. Fingertip distance G can be adjusted by working pressure.It is suggested to be used with Rochu control unit.
- Soft beak material is divided into Normal Material [H] and Dust-free Normal Material [HAS]. When the workpiece is light, or very soft, easy to adhere to adsorp on the soft beak, Dust-free Normal Material [HAS] is preferred.
- Food-grade material, direct food contact approved.

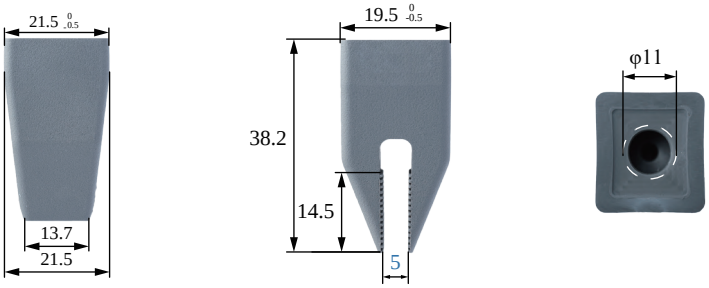

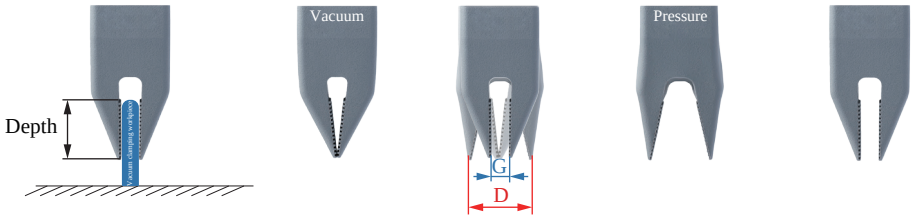

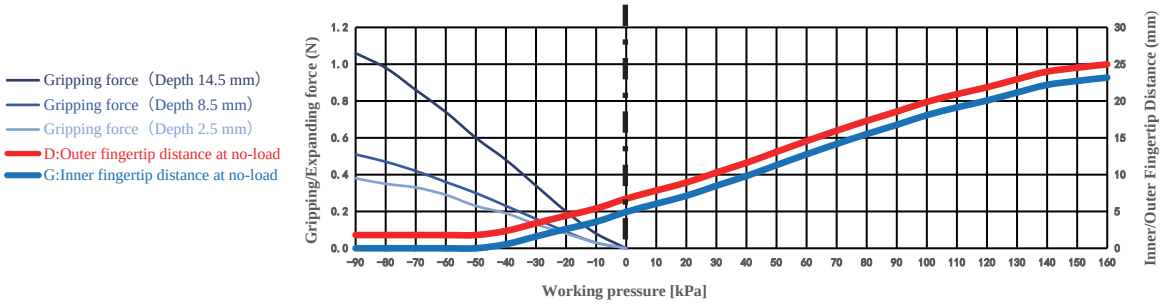

The clamping/inner-supporting force data of this product are measured based on the ideal workpiece size.
When the workpiece size deviates from the ideal value, the clamping/inner-supporting force decreases linearly.
If the workpiece size exceeds the clamping range or inner-supporting range, the clamping/inner-supporting force drops to 0.

Paremeter

Gripping range	0-15mm	Gripping force	0-1.1N	Theoretical gripping load**	0-42g	Ideal gripping workpiece size*	5mm
Internal gripping range	—	Internal gripping force	—	Theoretical internal gripping load**	—	Ideal internal gripping workpiece size*	—
Joint size	M5	Life time***	1.5 million times	Contact Temperature	<220℃	Safe pressure***	<160kPa

*: The width of the cuboid that generates the maximum gripping force (two-finger gripping), the outer diameter of the cylinder (multi-finger gripping), the width of the square hole (two-finger internal gripping), or the inner diameter of the circular hole (multi-finger internal gripping);
**: Only the theoretical load of the ideal workpiece under standard working conditions is marked for reference and comparison. The real load capacity is also affected by factors such as the surface structure and roughness of the workpiece. Please take the measured data as the standard;
***: The working air pressure and the surface roughness of the workpiece in the usage scenario may have different degrees of impact on the life-time. Please configure Rochu control Unit. Do not exceed the safe air pressure.

DAC Straight Fitting Installation

Scan to watch videos



DAL Side Fitting Installation

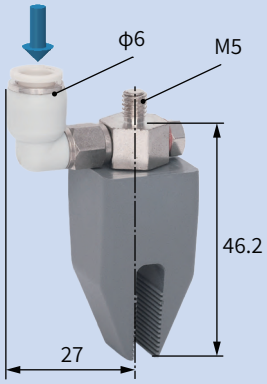

Scara Robotic Arm Installation

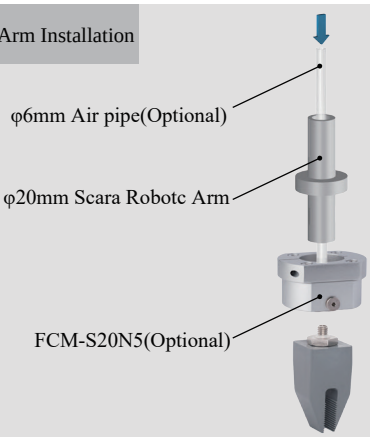

Robotic Arm Flange Side Fitting Installation

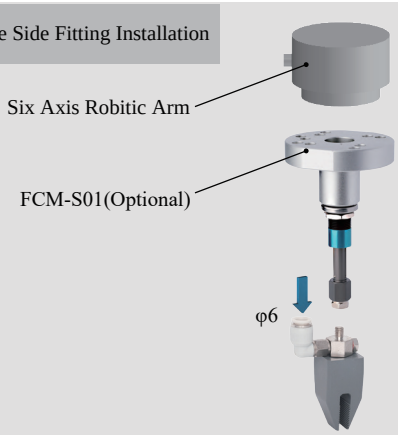

Rigid Connection Installation

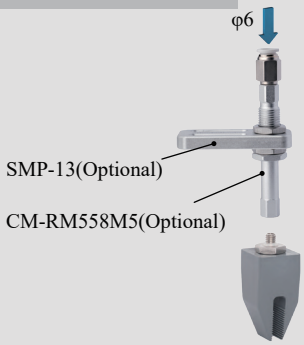

Buffer Installation



Matrix Installation

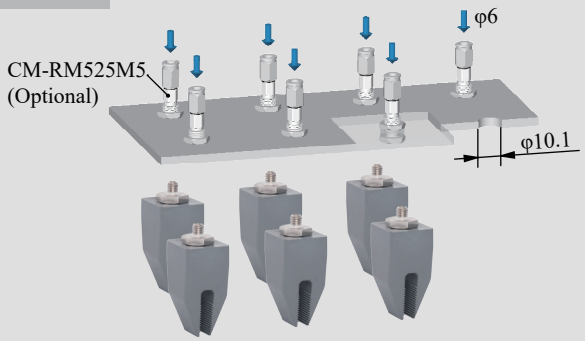

Installation of Optical Fiber Sensors

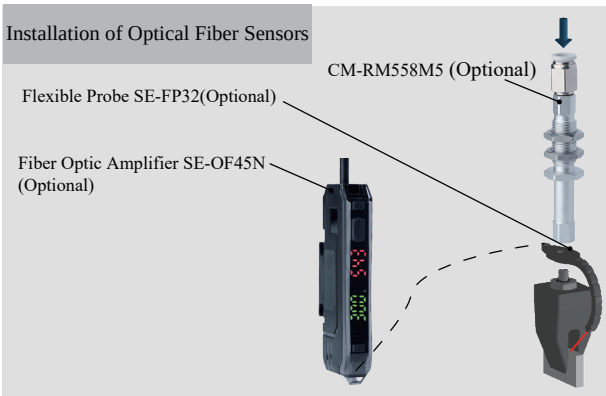

DAC-20005V[LH] Direct-through Anti-static H Type		DAL-20005V[LH] Side-through Anti-static H Type	
DAC-20005V[LH] Direct-through Anti-static Dust-free H Type		DAL-20005V[LH] Side-through Anti-static Dust-free H Type	
Weight	16.9g	**Weight**	25.6g

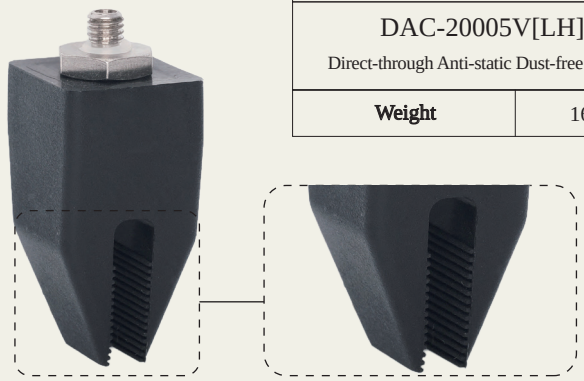



Product features

- Fingertips open under pressure state and clamp in a vacuum. Inner fingertips distance G and outer fingertips distance D can be adjusted by working pressure.It is suggested to be used with Rochu control unit.
- The Anti-static material meets the requirements of the national standard GB/T11210-2014, with a point-to-point resistance of 0.1-1000MΩ. The Anti-static Dust-free type [LHAS] is more suitable for dealing with workpieces that have dustproof requirements or are miniature and lightweight.

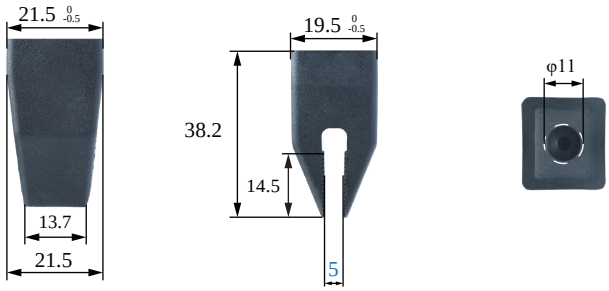

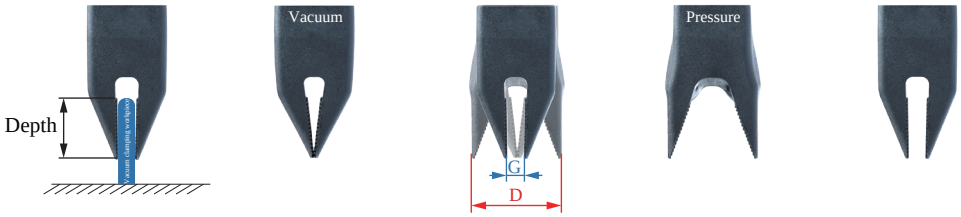

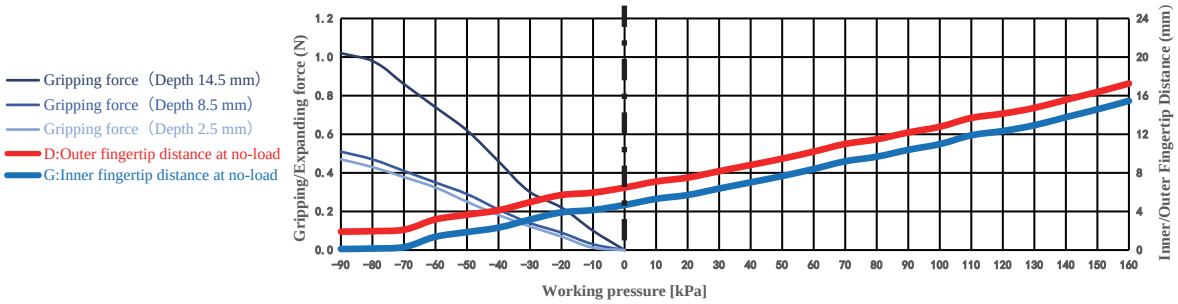

The clamping/inner-supporting force data of this product are measured based on the ideal workpiece size.
When the workpiece size deviates from the ideal value, the clamping/inner-supporting force decreases linearly.
If the workpiece size exceeds the clamping range or inner-supporting range, the clamping/inner-supporting force drops to 0.

Paremeter

Gripping range	1-15mm	Gripping force	0-1N	Theoretical gripping load**	0-41g	Ideal gripping workpiece size*	5mm
Internal gripping range	—	Internal gripping force	—	Theoretical internal gripping load**	—	Ideal internal gripping workpiece size*	—
Joint size	M5	Life time***	1.5 million times	Contact Temperature	<220°C	Safe pressure***	<160kPa

*: The width of the cuboid that generates the maximum gripping force (two-finger gripping), the outer diameter of the cylinder (multi-finger gripping), the width of the square hole (two-finger internal gripping), or the inner diameter of the circular hole (multi-finger internal gripping);
**: Only the theoretical load of the ideal workpiece under standard working conditions is marked for reference and comparison. The real load capacity is also affected by factors such as the surface structure and roughness of the workpiece. Please take the measured data as the standard;
***: The working air pressure and the surface roughness of the workpiece in the usage scenario may have different degrees of impact on the life-time. Please configure Rochu control Unit. Do not exceed the safe air pressure.

DAC Straight Fitting Installation

Scan to watch videos



DAL Side Fitting Installation

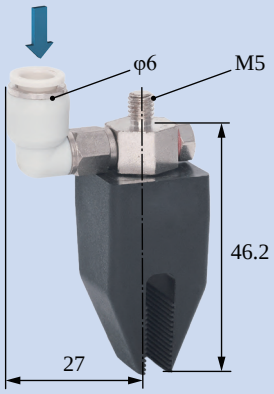

Scara Robotic Arm Installation



Robotic Arm Flange Side Fitting Installation

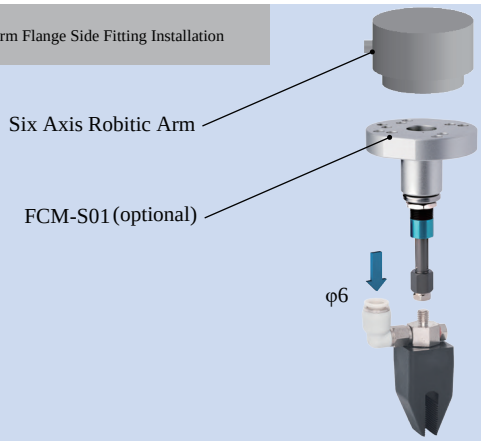

Rigid Connection Installation

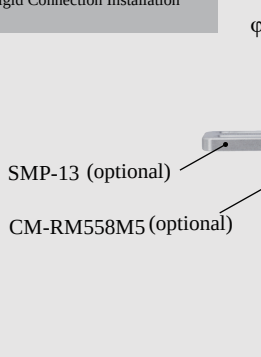

Buffer Installation



Matrix Installation

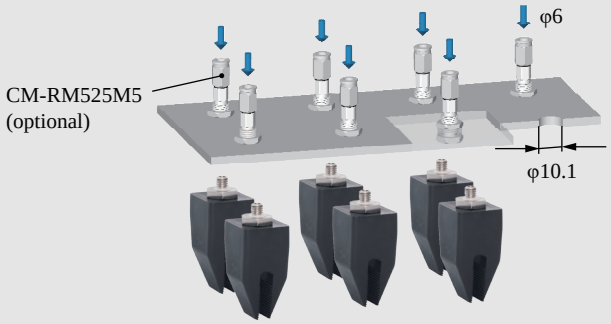

Installation of Optical Fiber Sensors

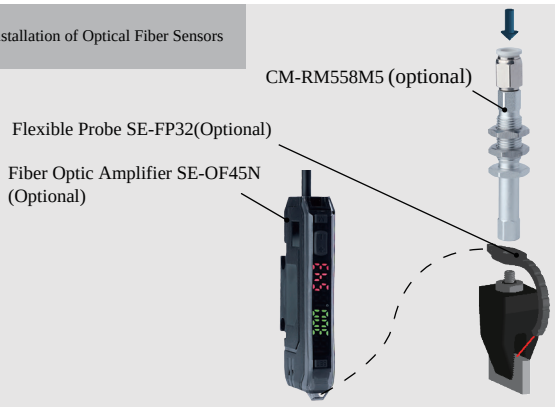

DAC-20005V[P]A11 Direct-through Anti-rotation P Type		DAL-20005V[P]A11 Side-through Anti-rotation P Type	
DAC-20005V[PAS]A11 Direct-through Anti-rotation Dust-free P Type		DAL-20005V[PAS]A11 Side-through Anti-rotation Dust-free P Type	
Weight	16.6g	Weight	24.9g

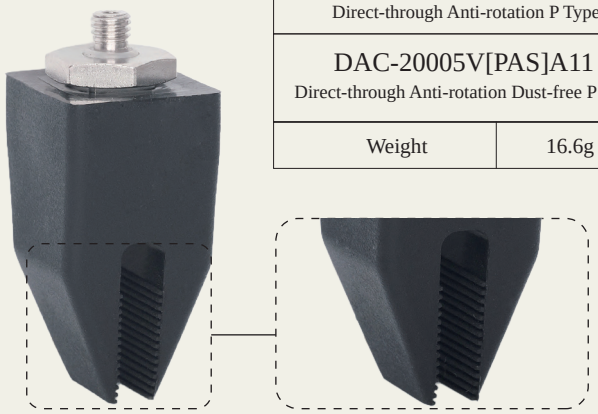



- Fingertip open under pressure and clamped in a vacuum. Fingertip distance G can be adjusted by working pressure.It is suggested to be used with Rochu control unit.
- Soft beak material is divided into Normal Material [P] and Dust-free Normal Material [PAS]. When the workpiece is light, or very soft, easy to adhere to adsorp on the soft beak, Dust-free Normal Material [PAS] is preferred.
- Food-grade material, direct food contact approved.

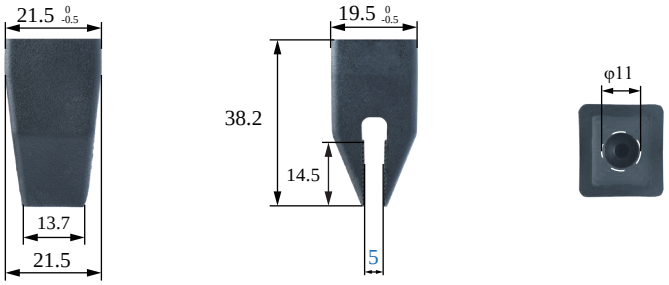

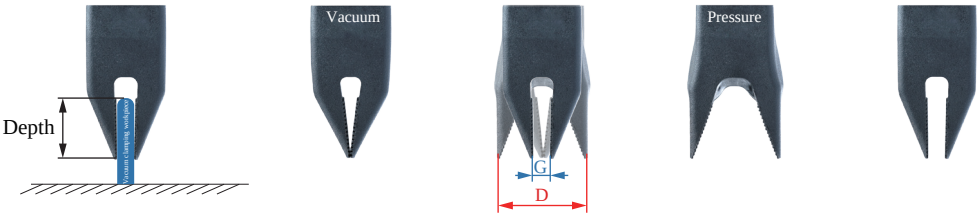

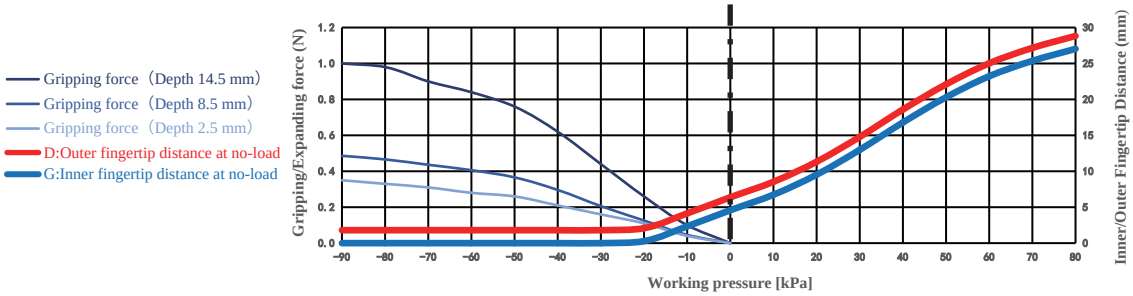

Gripping range	0-15mm	Gripping force	0-1N	Theoretical gripping load**	0-40g	Ideal gripping workpiece size*	5mm
Internal gripping range	—	Internal gripping force	—	Theoretical internal gripping load**	—	Ideal internal gripping workpiece size*	—
Joint size	M5	Life time***	1.5 million times	Contact Temperature	<220°C	Safe pressure***	<80kPa

DAC Straight Fitting Installation

Scan to watch videos



DAL Side Fitting Installation

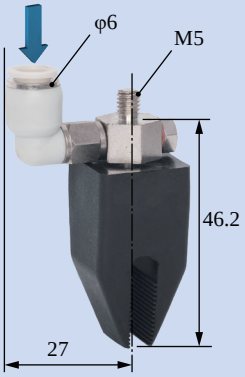

Scara Robotic Arm Installation

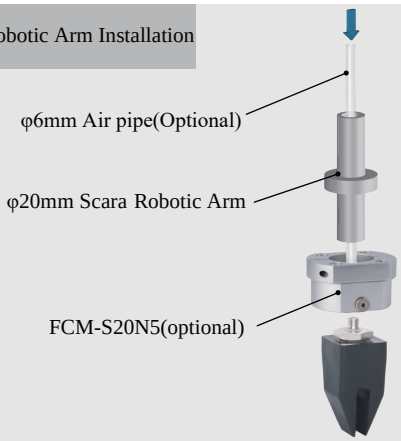

Robotic Arm Flange Side Fitting Installation

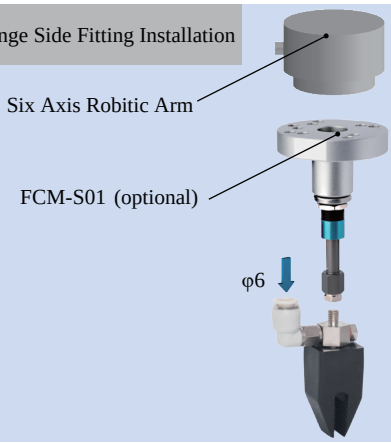

Rigid Connection Installation

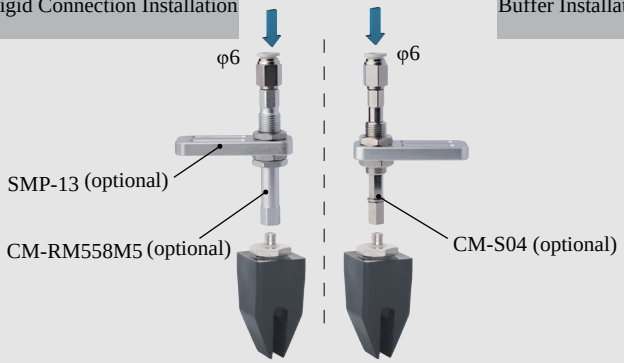

Buffer Installation

Matrix Installation

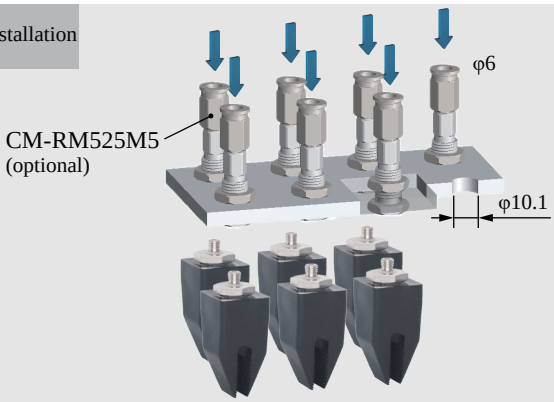

Installation of Optical Fiber Sensors

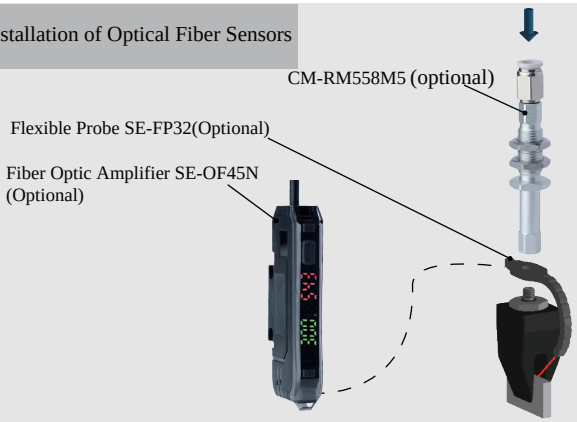



DAC-20006[P] Direct-through P Type		DAL-20006[P] Side-through P Type	
DAC-20006[PAS] Direct-through Dust-free P Type		DAL-20006[PAS] Side-through Dust-free P Type	
Weight	16.3g	**Weight**	24.7g



Product features

- Fingertip open under pressure and clamped in a vacuum. Fingertip distance G can be adjusted by working pressure.It is suggested to be used with Rochu control unit.
- Soft beak material is divided into Normal Material [P] and Dust-free Normal Material [PAS]. When the workpiece is light, or very soft, easy to adhere to adsorp on the soft beak, Dust-free Normal Material [PAS] is preferred.
- Food-grade material, direct food contact approved.

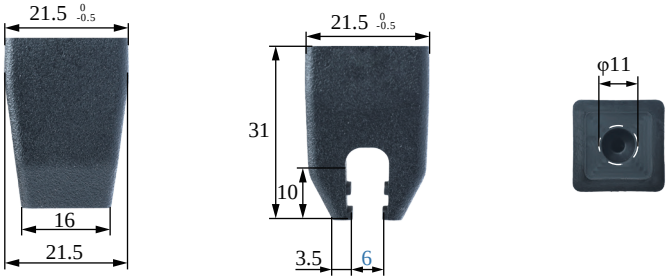

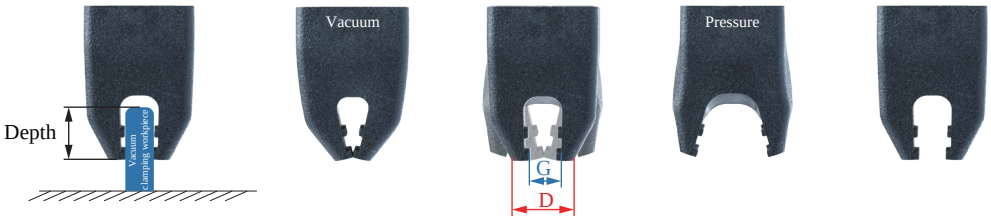

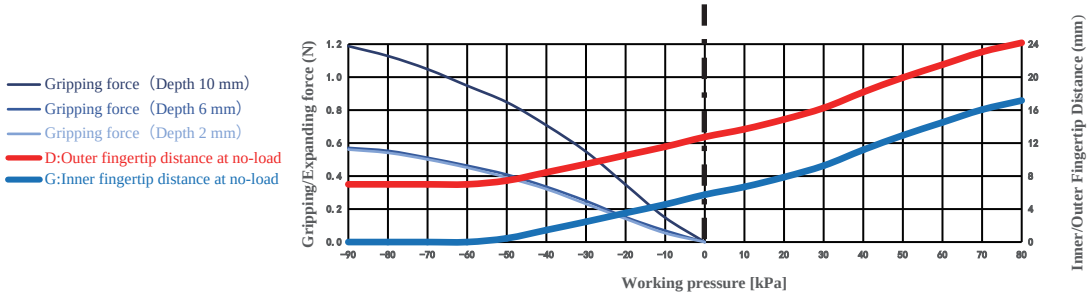

The clamping/inner-supporting force data of this product are measured based on the ideal workpiece size.
When the workpiece size deviates from the ideal value, the clamping/inner-supporting force decreases linearly.
If the workpiece size exceeds the clamping range or inner-supporting range, the clamping/inner-supporting force drops to 0.

Paremeter

Gripping range	0-12mm	Gripping force	0-1.2N	Theoretical gripping load**	0-48g	Ideal gripping workpiece size*	6mm
Internal gripping range	—	Internal gripping force	—	Theoretical internal gripping load**	—	Ideal internal gripping workpiece size*	—
Joint size	M5	Life time***	1.5 million times	Contact Temperature	<220℃	Safe pressure***	<80kPa

*: The width of the cuboid that generates the maximum gripping force (two-finger gripping), the outer diameter of the cylinder (multi-finger gripping), the width of the square hole (two-finger internal gripping), or the inner diameter of the circular hole (multi-finger internal gripping);
**: Only the theoretical load of the ideal workpiece under standard working conditions is marked for reference and comparison. The real load capacity is also affected by factors such as the surface structure and roughness of the workpiece. Please take the measured data as the standard;
***: The working air pressure and the surface roughness of the workpiece in the usage scenario may have different degrees of impact on the life-time. Please configure Rochu control Unit. Do not exceed the safe air pressure.

DAC Straight Fitting Installation

Scan to watch videos

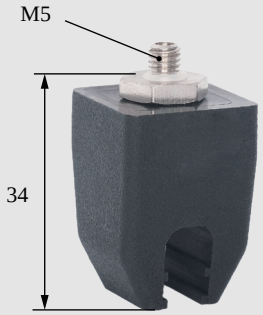

DAL Side Fitting Installation

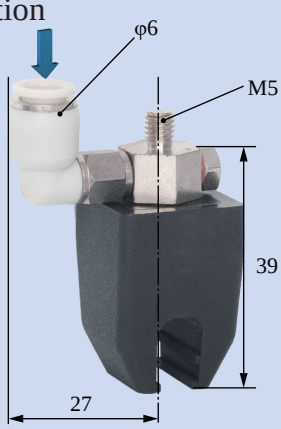

Scara Robotic Arm Installation

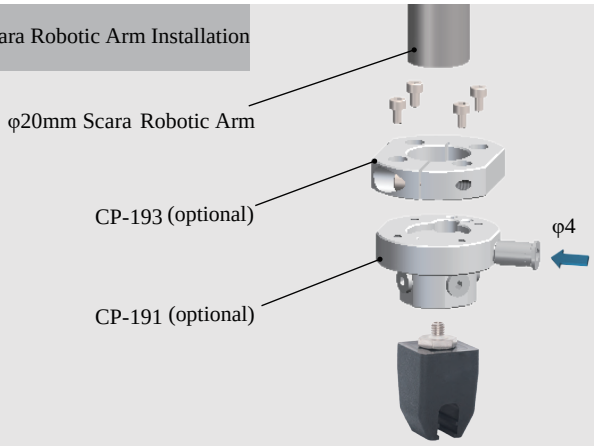

Robotic Arm Flange Side Fitting Installation

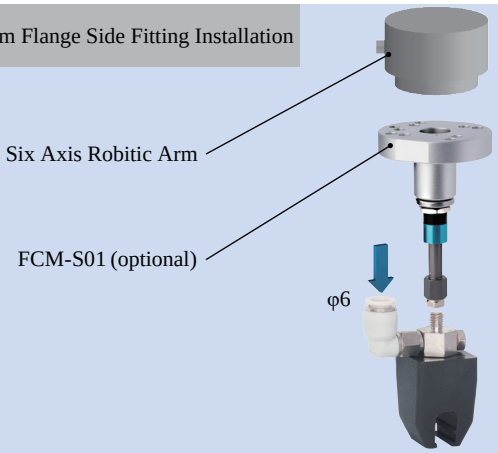

Rigid Connection Installation

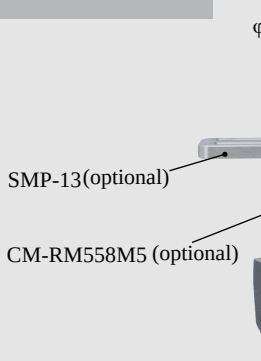

Buffer Installation



Matrix Installation

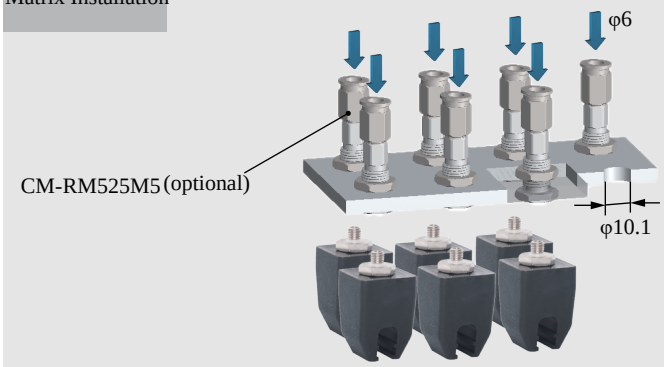

Installation of Optical Fiber Sensors

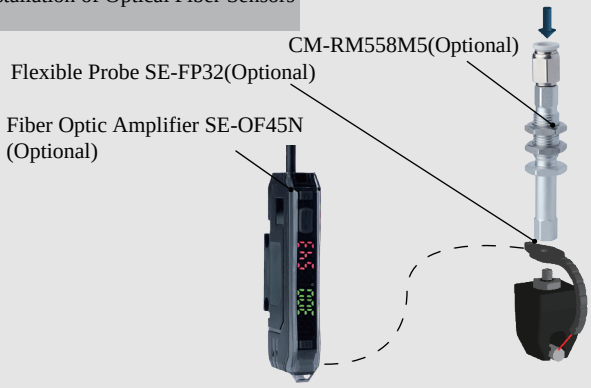

B-20006[P]

	DAC-21606[P]/M Direct-through P Type		DAL-21606[P]/M Side-through P Type	
	DAC-21606[PAS]/M Direct-through Dust-free P Type		DAL-21606[PAS]/M Side-through Dust-free P Type	
	Weight	23.7g	**Weight**	24.6g

Product features

- Fingertip open under pressure and clamped in a vacuum. Fingertip distance G can be adjusted by working pressure.It is suggested to be used with Rochu control unit.
- Soft beak material is divided into Normal Material [P] and Dust-free Normal Material [PAS]. When the workpiece is light, or very soft, easy to adhere to adsorp on the soft beak, Dust-free Normal Material [PAS] is preferred.
- Food-grade material, direct food contact approved.

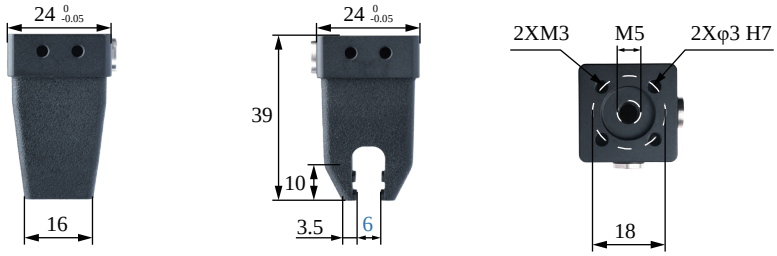

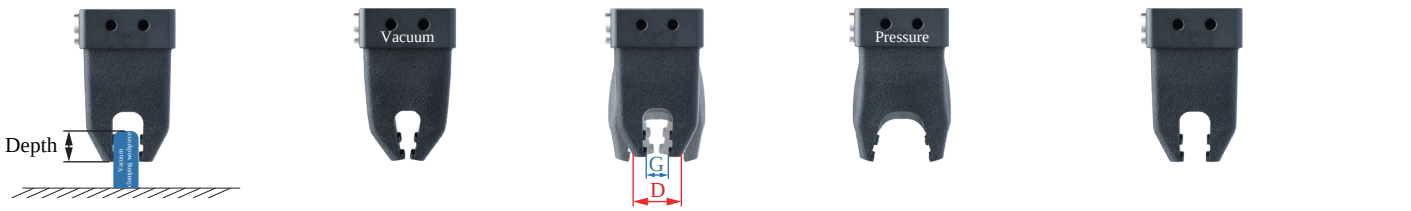

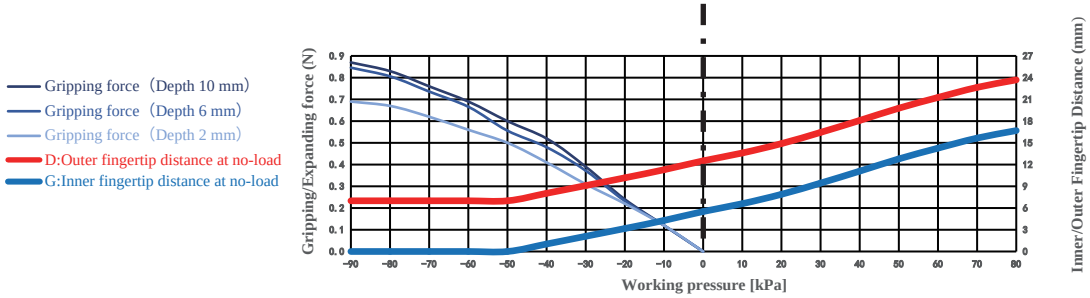

The clamping/inner-supporting force data of this product are measured based on the ideal workpiece size.
When the workpiece size deviates from the ideal value, the clamping/inner-supporting force decreases linearly.
If the workpiece size exceeds the clamping range or inner-supporting range, the clamping/inner-supporting force drops to 0.

Paremeter

Gripping range	0-12mm	Gripping force	0-0.9N	Theoretical gripping load**	0-35g	Ideal gripping workpiece size*	6mm
Internal gripping range	—	Internal gripping force	—	Theoretical internal gripping load**	—	Ideal internal gripping workpiece size*	—
Joint size	M5	Life time***	1.5 million times	Contact Temperature	<220℃	Safe pressure***	<80kPa

*: The width of the cuboid that generates the maximum gripping force (two-finger gripping), the outer diameter of the cylinder (multi-finger gripping), the width of the square hole (two-finger internal gripping), or the inner diameter of the circular hole (multi-finger internal gripping);
**: Only the theoretical load of the ideal workpiece under standard working conditions is marked for reference and comparison. The real load capacity is also affected by factors such as the surface structure and roughness of the workpiece. Please take the measured data as the standard;
***: The working air pressure and the surface roughness of the workpiece in the usage scenario may have different degrees of impact on the life-time. Please configure Rochu control Unit. Do not exceed the safe air pressure.

DAC Straight Fitting Installation

Scan to watch videos

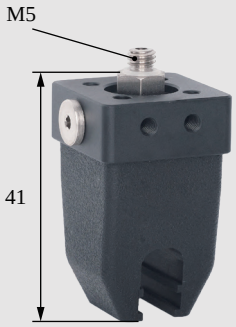

DAL Side Fitting Installation

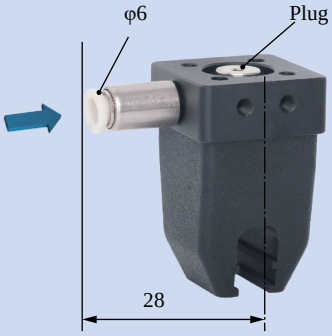

Rigid Connection Installation

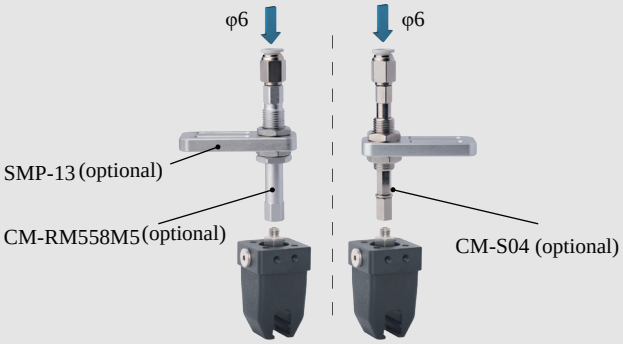

Buffer Installation

Side Access Partition Installation

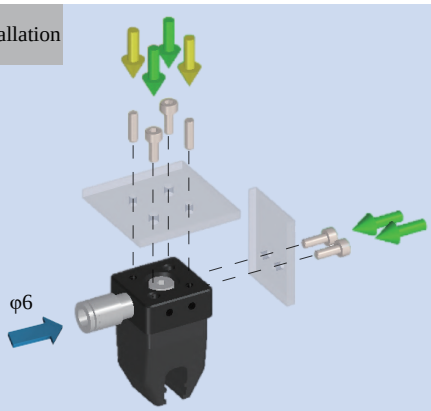

Precise Positioning Installation

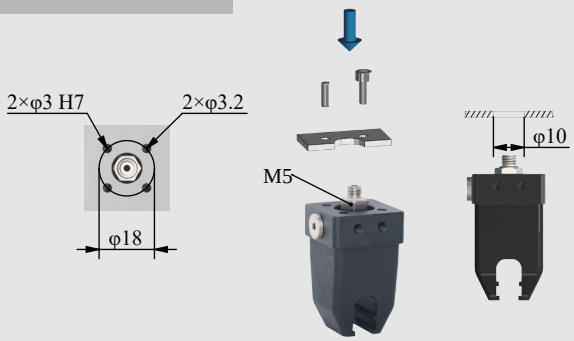

Matrix Installation

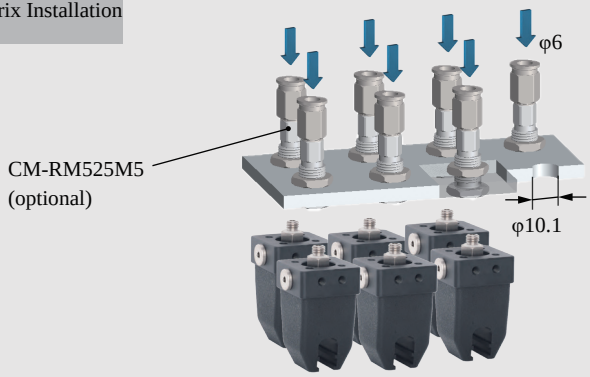

Installation of Optical Fiber Sensors

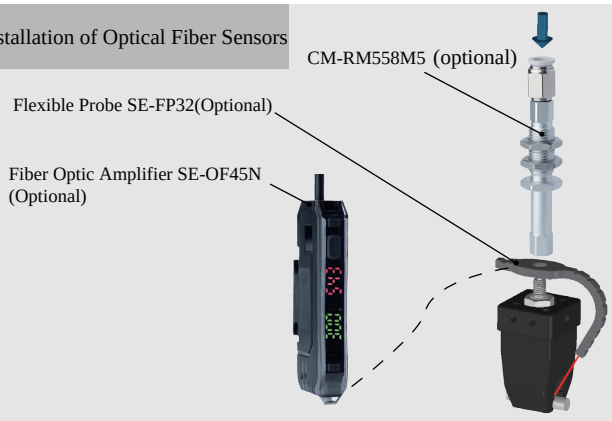

	DAC-20606[P] Direct-through P Type		DAL-20606[P] Side-through P Type	
	DAC-20606[PAS] Direct-through Dust-free P Type		DAL-20606[PAS] Side-through Dust-free P Type	
	Weight	16.3g	**Weight**	24.7g

Product features

- Fingertip open under pressure and clamped in a vacuum. Fingertip distance G can be adjusted by working pressure.It is suggested to be used with Rochu control unit.
- Soft beak material is divided into Normal Material [P] and Dust-free Normal Material [PAS]. When the workpiece is light, or very soft, easy to adhere to adsorp on the soft beak, Dust-free Normal Material [PAS] is preferred.
- Food-grade material, direct food contact approved.

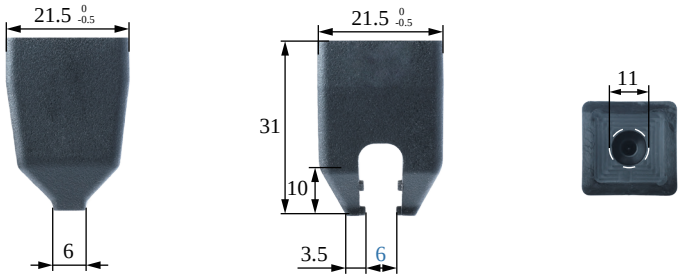

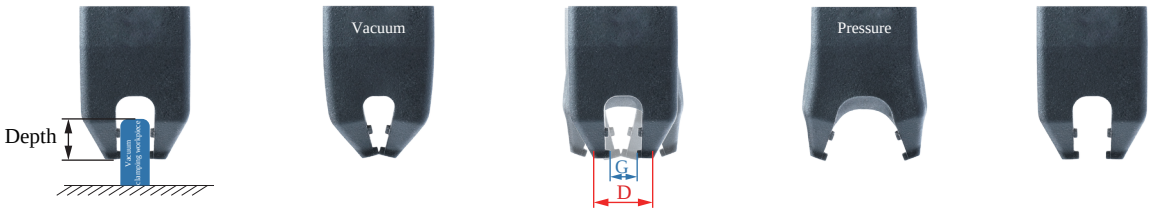

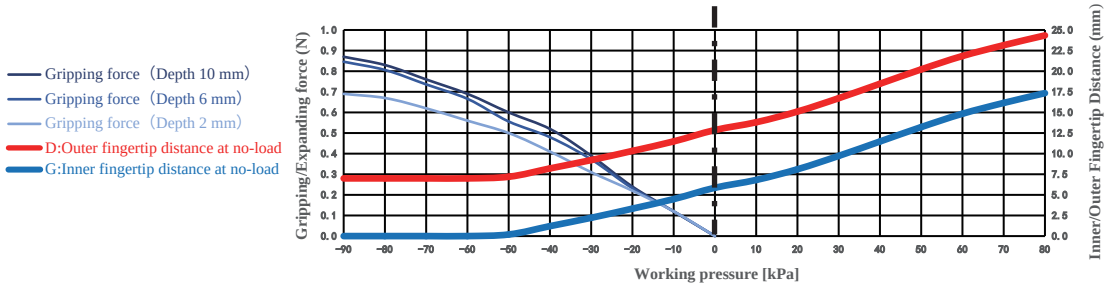

The clamping/inner-supporting force data of this product are measured based on the ideal workpiece size.
When the workpiece size deviates from the ideal value, the clamping/inner-supporting force decreases linearly.
If the workpiece size exceeds the clamping range or inner-supporting range, the clamping/inner-supporting force drops to 0.

Paremeter

Gripping range	0-12mm	Gripping force	0-0.9N	Theoretical gripping load**	0-35g	Ideal gripping workpiece size*	6mm
Internal gripping range	—	Internal gripping force	—	Theoretical internal gripping load**	—	Ideal internal gripping workpiece size*	—
Joint size	M5	Life time***	1.5 million times	Contact Temperature	<220°C	Safe pressure***	<80kPa

*: The width of the cuboid that generates the maximum gripping force (two-finger gripping), the outer diameter of the cylinder (multi-finger gripping), the width of the square hole (two-finger internal gripping), or the inner diameter of the circular hole (multi-finger internal gripping);
**: Only the theoretical load of the ideal workpiece under standard working conditions is marked for reference and comparison. The real load capacity is also affected by factors such as the surface structure and roughness of the workpiece. Please take the measured data as the standard;
***: The working air pressure and the surface roughness of the workpiece in the usage scenario may have different degrees of impact on the life-time. Please configure Rochu control Unit. Do not exceed the safe air pressure.

DAC Straight Fitting Installation

Scan to watch videos

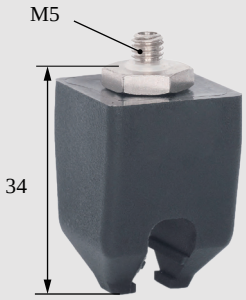

DAL Side Fitting Installation

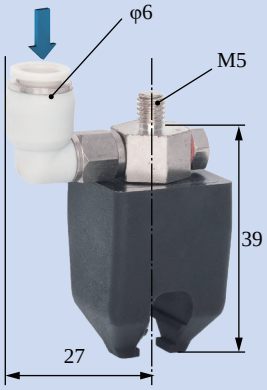

Precise Positioning Installation

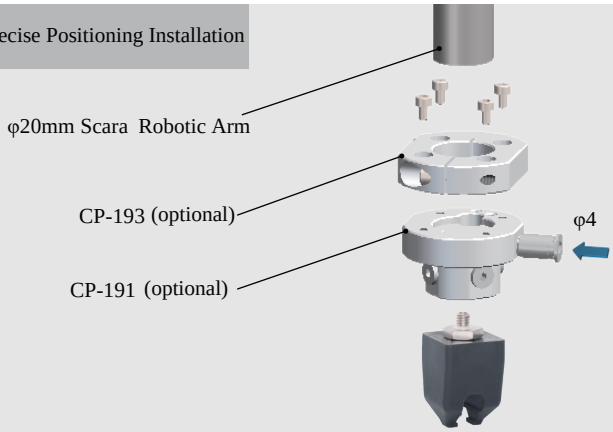

Robotic Arm Flange Side Fitting Installation

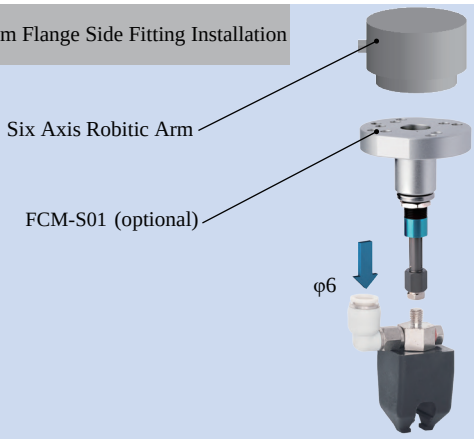

Rigid Connection Installation

Buffer Installation

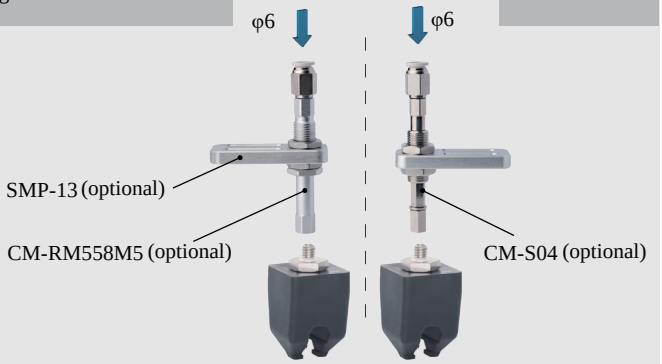

Matrix Installation

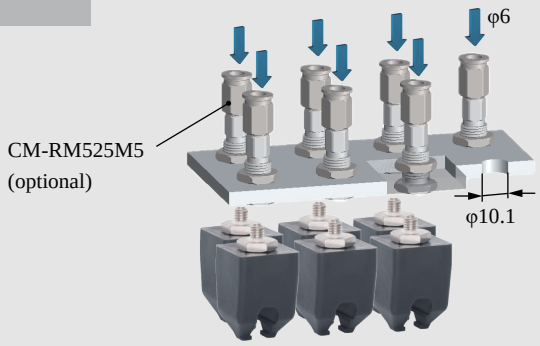

Installation of Optical Fiber Sensors

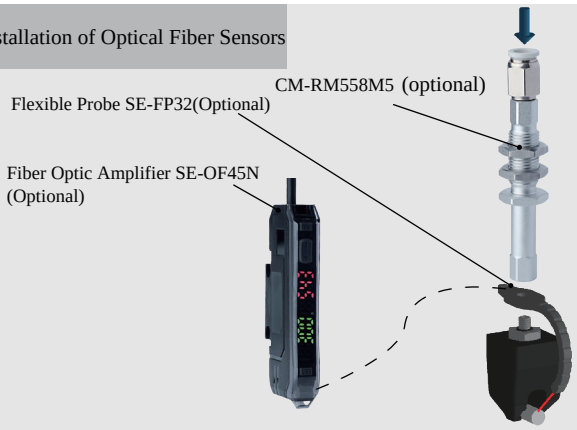

B-20606[P]



DAC-20606[P]/M Direct-through P Type	DAL-20606[P]/M Side-through P Type
DAC-20606[PAS]/M Direct-through Dust-free P Type	DAL-20606[PAS]/M Side-through Dust-free P Type
Weight 23.2g	**Weight** 24g



Product features

- Fingertip open under pressure and clamped in a vacuum. Fingertip distance G can be adjusted by working pressure.It is suggested to be used with Rochu control unit.
- Soft beak material is divided into Normal Material [P] and Dust-free Normal Material [PAS]. When the workpiece is light, or very soft, easy to adhere to adsorp on the soft beak, Dust-free Normal Material [PAS] is preferred.
- Food-grade material, direct food contact approved.

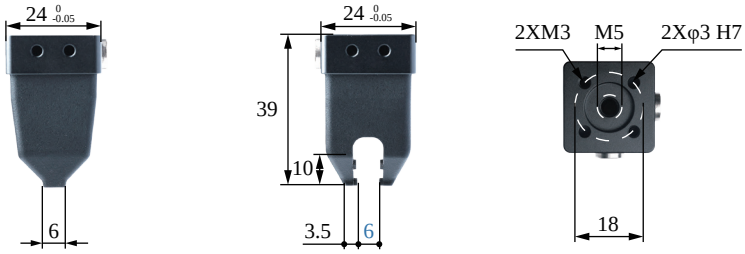

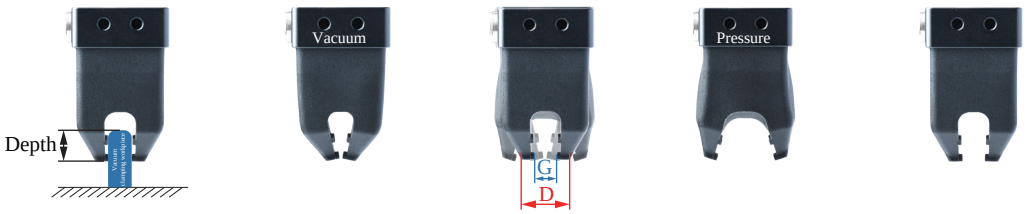

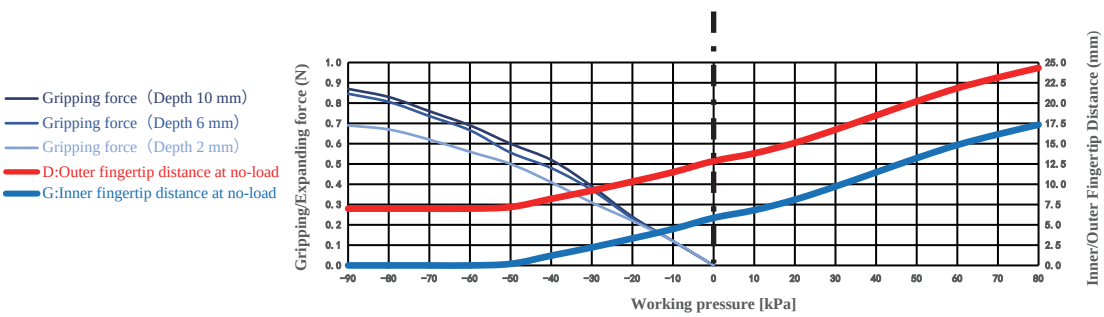

The clamping/inner-supporting force data of this product are measured based on the ideal workpiece size.
When the workpiece size deviates from the ideal value, the clamping/inner-supporting force decreases linearly.
If the workpiece size exceeds the clamping range or inner-supporting range, the clamping/inner-supporting force drops to 0.

Paremeter

Gripping range	0-12mm	Gripping force	0-0.9N	Theoretical gripping load**	0-35g	Ideal gripping workpiece size*	6mm
Internal gripping range	—	Internal gripping force	—	Theoretical internal gripping load**	—	Ideal internal gripping workpiece size*	—
Joint size	M5	Life time***	1.5 million times	Contact Temperature	<220℃	Safe pressure***	<80kPa

*: The width of the cuboid that generates the maximum gripping force (two-finger gripping), the outer diameter of the cylinder (multi-finger gripping), the width of the square hole (two-finger internal gripping), or the inner diameter of the circular hole (multi-finger internal gripping);
**: Only the theoretical load of the ideal workpiece under standard working conditions is marked for reference and comparison. The real load capacity is also affected by factors such as the surface structure and roughness of the workpiece. Please take the measured data as the standard;
***: The working air pressure and the surface roughness of the workpiece in the usage scenario may have different degrees of impact on the life-time. Please configure Rochu control Unit. Do not exceed the safe air pressure.

DAC Straight Fitting Installation

Scan to watch videos

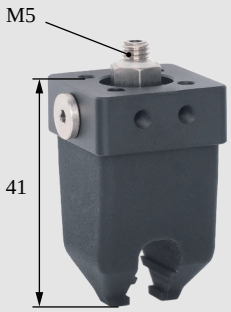

DAL Side Fitting Installation

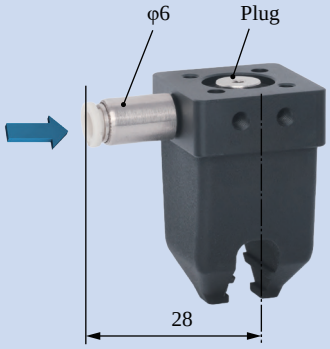

Rigid Connection Installation

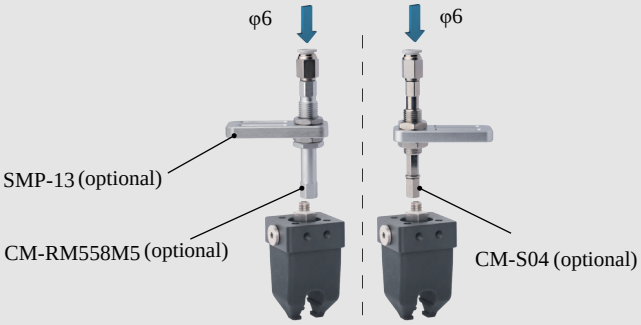

Buffer Installation

Side Access Partition Installation

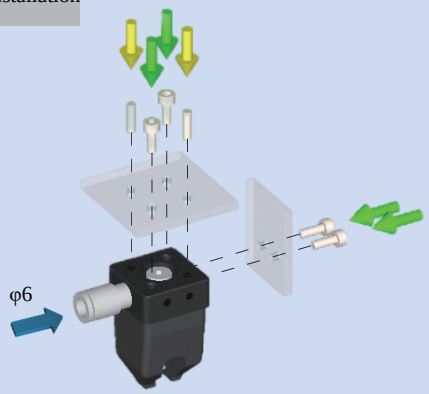

Precise Positioning Installation

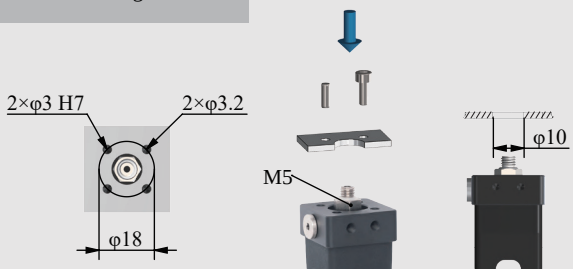

Matrix Installation

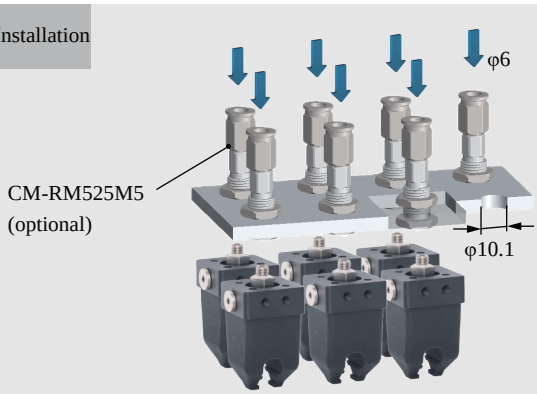

Installation of Optical Fiber Sensors

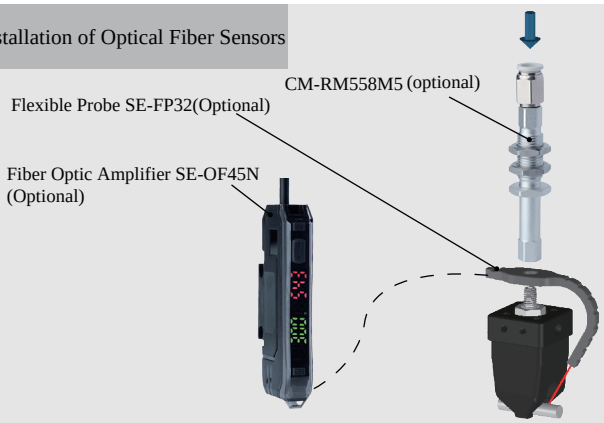



DAC-21413[P] Direct-through P Type	DAL-21413[P] Side-through P Type
DAC-21413[PAS] Direct-through Dust-free P Type	DAL-21413[PAS] Side-through Dust-free P Type



Weight	20.2g	Weight	28.6g

Product features

- Fingertip open under pressure and clamped in a vacuum. Fingertip distance G can be adjusted by working pressure.It is suggested to be used with Rochu control unit.
- Soft beak material is divided into Normal Material [P] and Dust-free Normal Material [PAS]. When the workpiece is light, or very soft, easy to adhere to adsorp on the soft beak, Dust-free Normal Material [PAS] is preferred.
- Food-grade material, direct food contact approved.

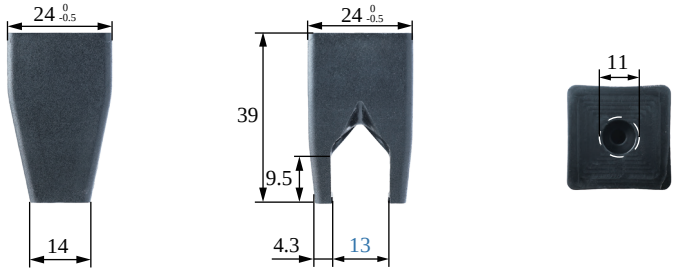

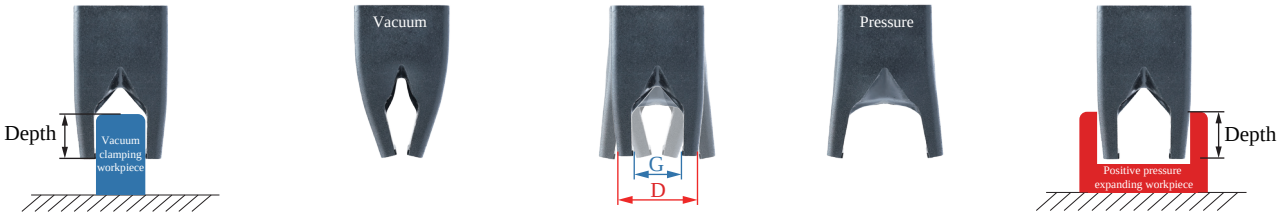

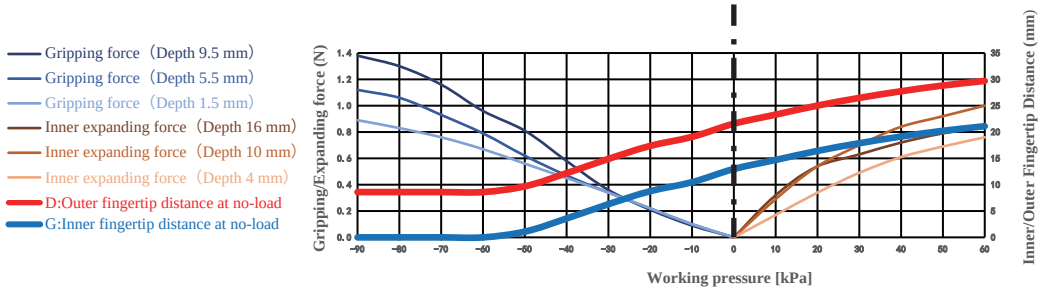

The clamping/inner-supporting force data of this product are measured based on the ideal workpiece size.
When the workpiece size deviates from the ideal value, the clamping/inner-supporting force decreases linearly.
If the workpiece size exceeds the clamping range or inner-supporting range, the clamping/inner-supporting force drops to 0.

Paremeter

Gripping range	0-17mm	Gripping force	0-1.4N	Theoretical gripping load**	0-55g	Ideal gripping workpiece size*	13mm
Internal gripping range	12-24mm	Internal gripping force	0-1N	Theoretical internal gripping load**	0-40g	Ideal internal gripping workpiece size*	22mm
Joint size	M5	Life time***	1.5 million times	Contact Temperature	<220°C	Safe pressure***	<60kPa

*: The width of the cuboid that generates the maximum gripping force (two-finger gripping), the outer diameter of the cylinder (multi-finger gripping), the width of the square hole (two-finger internal gripping), or the inner diameter of the circular hole (multi-finger internal gripping);
**: Only the theoretical load of the ideal workpiece under standard working conditions is marked for reference and comparison. The real load capacity is also affected by factors such as the surface structure and roughness of the workpiece. Please take the measured data as the standard;
***: The working air pressure and the surface roughness of the workpiece in the usage scenario may have different degrees of impact on the life-time. Please configure Rochu control Unit. Do not exceed the safe air pressure.

DAC Straight Fitting Installation

Scan to watch videos

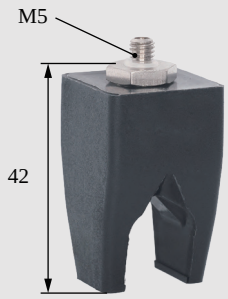

DAL Side Fitting Installation

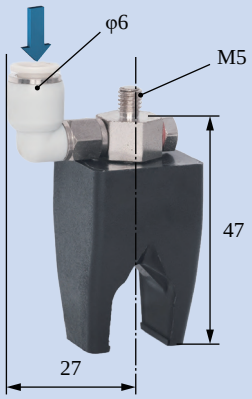

Scara Robotic Arm Installation

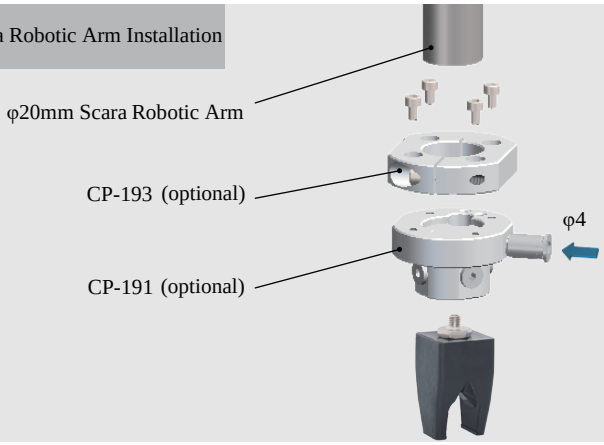

Robotic Arm Flange Side Fitting Installation

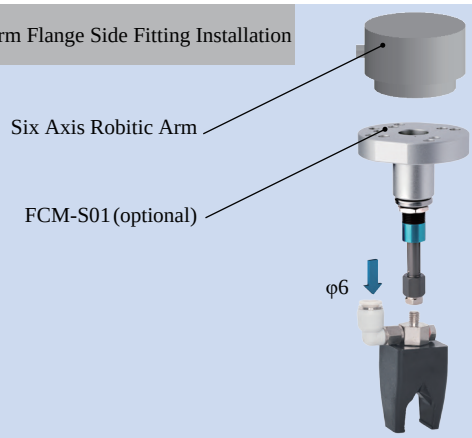

Rigid Connection Installation

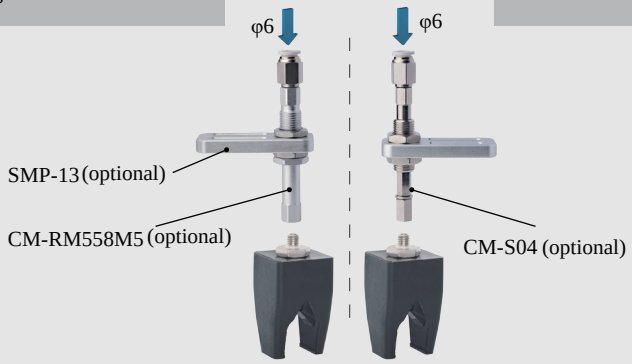

Buffer Installation

Matrix Installation

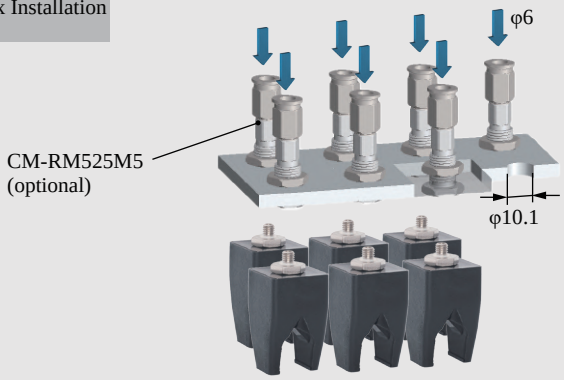

Installation of Optical Fiber Sensors

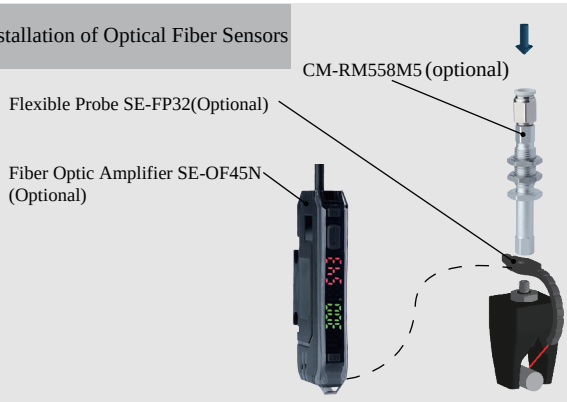

DAC-2G1012[H]/SN Direct-through H Type	DAS-2G1012[H]/SN Direct-through Precision Positioning H Type	DAL-2G1012[H]/SN Side-through H Type	DAM-2G 1012[H]/SN Multi-way Precision Positioning H Type
DAC-2G1012[HAS]/SN Direct-through Dust-free H Type	DAS-2G1012[HAS]/SN Direct-through Precision Positioning Dust-free H Type	DAL-2G1012[HAS]/SN Side-through Dust-free H Type	DAM-2G1012[HAS]/SN Multi-way Precision Positioning Dust-free H Type
			
Weight 14.5g	**Weight** 21.7g	**Weight** 28.4g	**Weight** 25.9g

Product features

- Fingertip open under pressure and clamped in a vacuum. Fingertip distance G can be adjusted by working pressure.It is suggested to be used with Rochu control unit.
- Soft beak material is divided into Normal Material [H] and Dust-free Normal Material [HAS]. When the workpiece is light, or very soft, easy to adhere to adsorp on the soft beak, Dust-free Normal Material [HAS] is preferred.
- Food-grade material, direct food contact approved.

Scan to watch videos

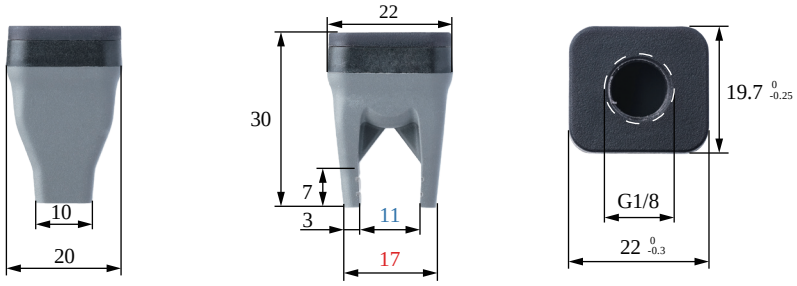



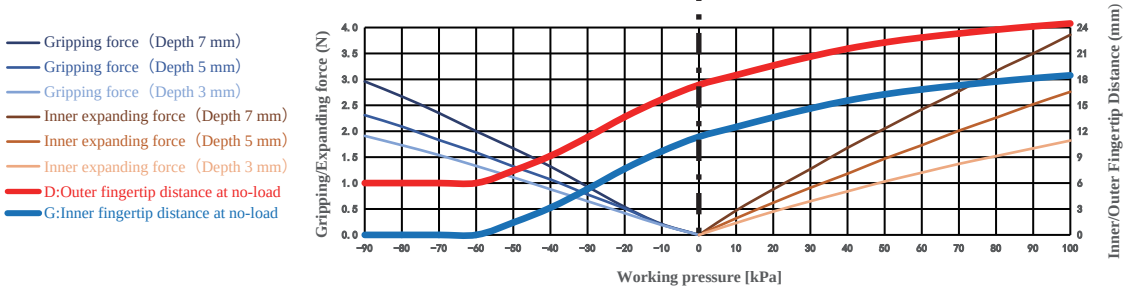

The clamping/inner-supporting force data of this product are measured based on the ideal workpiece size.
When the workpiece size deviates from the ideal value, the clamping/inner-supporting force decreases linearly.
If the workpiece size exceeds the clamping range or inner-supporting range, the clamping/inner-supporting force drops to 0.

Paremeter

Gripping range	0-14mm	Gripping force	0-3N	Theoretical gripping load**	0-118g	Ideal gripping workpiece size*	11mm
Internal gripping range	—	Internal gripping force	0-3.9N	Theoretical internal gripping load**	0-154g	Ideal internal gripping workpiece size*	—
Joint size	G1/8	Life time***	1.5 million times	Contact Temperature	<220°C	Safe pressure***	<100kPa

*: The width of the cuboid that generates the maximum gripping force (two-finger gripping), the outer diameter of the cylinder (multi-finger gripping), the width of the square hole (two-finger internal gripping), or the inner diameter of the circular hole (multi-finger internal gripping);
**: Only the theoretical load of the ideal workpiece under standard working conditions is marked for reference and comparison. The real load capacity is also affected by factors such as the surface structure and roughness of the workpiece. Please take the measured data as the standard;
***: The working air pressure and the surface roughness of the workpiece in the usage scenario may have different degrees of impact on the life-time. Please configure Rochu control Unit. Do not exceed the safe air pressure.

DAC Module
(Direct-through)



DAS Module
(Precise Positioning Direct-through)

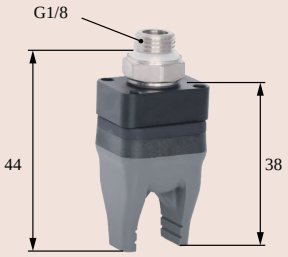

DAL Module
(Side-through)

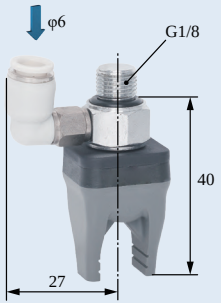

DAM Module
(Precise Positioning Multiple-through)

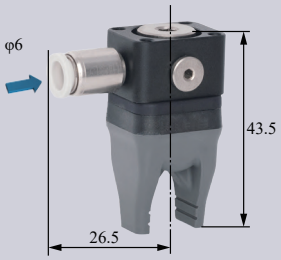

DAC
Rigid Connection Installation

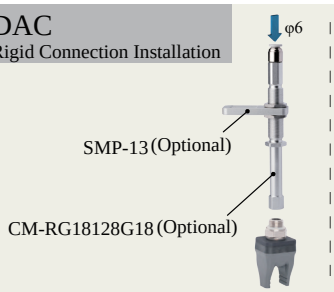

DAC
Buffer Installation

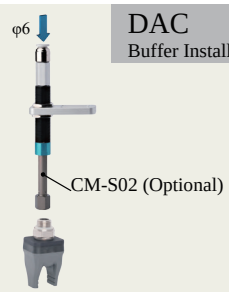

DAS
Matrix Installation

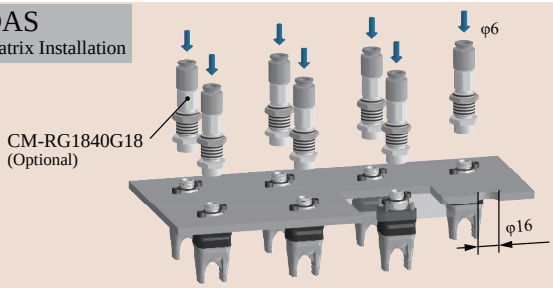

DAC Scara Scara Robot Arm Installation

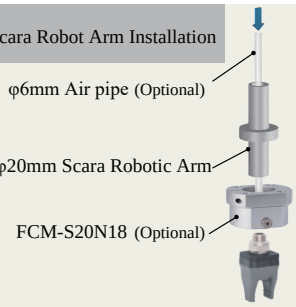

DAL
Robot Arm Flange Side-through Installation

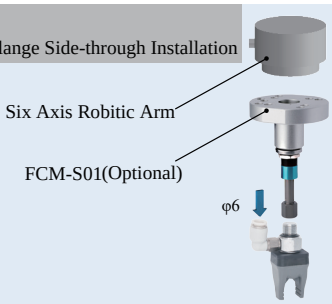

DAS Detection

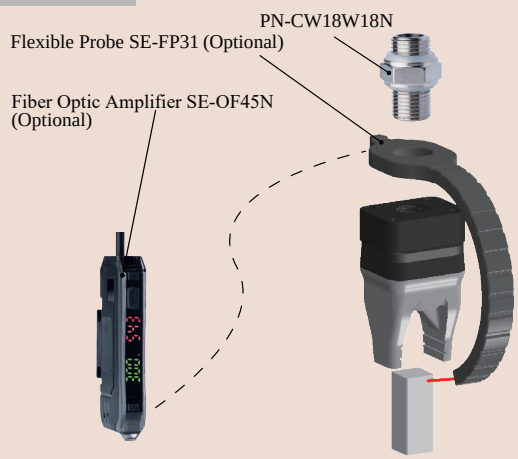

DAM Precise Positioning + Detection

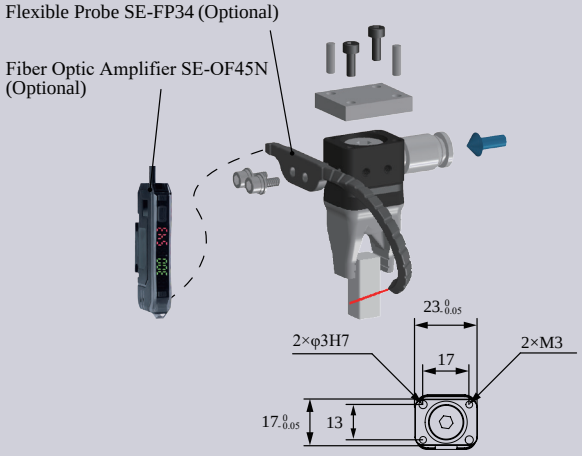

DAS Precise Positioning and Direct-through Installation

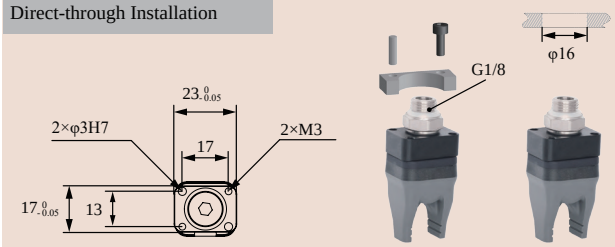

DAC-2G2227[LH]/SN Direct-through Anti-static H Type	DAS-2G2227[LH]/SN Direct-through Anti-static Precision Positioning H Type	DAL-2G2227[LH]/SN Side-through Anti-static H Type	DAM-2G2 227[LH]/SN Multi-way Anti-static Precision Positioning H Type
DAC-2G2227[LHAS]/SN Direct-through Anti-static Dust-free H Type	DAS-2G2227[LHAS]/SN Direct-through Anti-static Dust-free Precision Positioning H Type	DAL-2G2227[LHAS]/SN Side-through Anti-static Dust-free H Type	DAM-2G2227[LHAS]/SN Side-through Anti-static Dust-free Precision Positioning H Type
	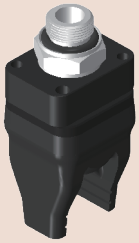		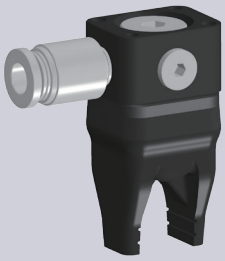
Weight 14.5g	**Weight** 21.7g	**Weight** 28.4g	**Weight** 25.9g

Product features

- Fingertips open under pressure state and clamp in a vacuum. Inner fingertips distance G and outer fingertips distance D can be adjusted by working pressure.It is suggested to be used with Rochu control unit.
- The Anti-static material meets the requirements of the national standard GB/T11210-2014, with a point-to-point resistance of 0.1-1000MΩ. The Anti-static Dust-free type [LHAS] is more suitable for dealing with workpieces that have dustproof requirements or are miniature and lightweight.

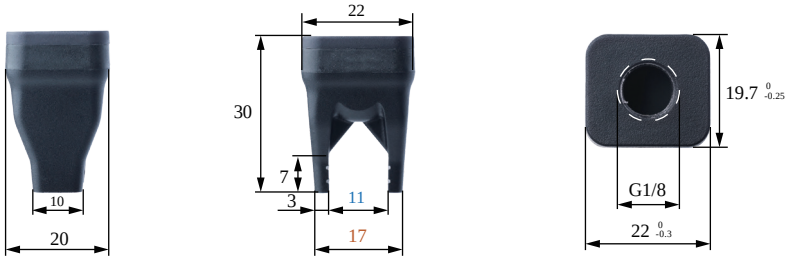

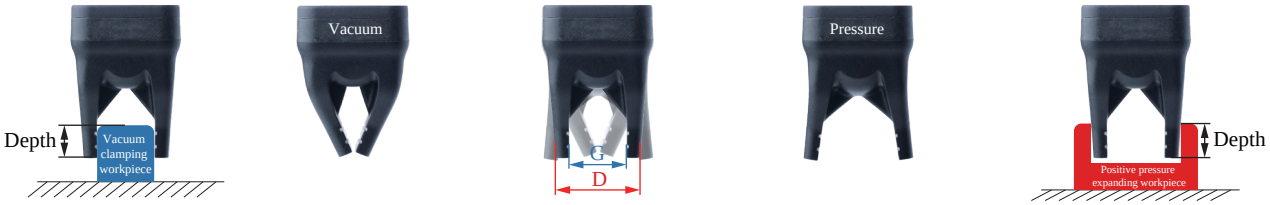

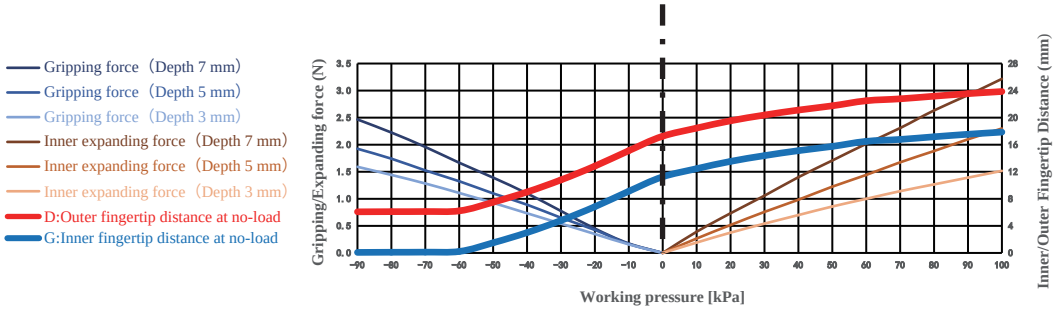

Paremeter

Gripping range	0-14mm	Gripping force	0-2.6N	Theoretical gripping load**	0-106g	Ideal gripping workpiece size*	11mm
Internal gripping range	—	Internal gripping force	—	Theoretical internal gripping load**	—	Ideal internal gripping workpiece size*	—
Joint size	G1/8	Life time***	1.5 million times	Contact Temperature	<220℃	Safe pressure***	<100kPa

*: The width of the cuboid that generates the maximum gripping force (two-finger gripping), the outer diameter of the cylinder (multi-finger gripping), the width of the square hole (two-finger internal gripping), or the inner diameter of the circular hole (multi-finger internal gripping);
**: Only the theoretical load of the ideal workpiece under standard working conditions is marked for reference and comparison. The real load capacity is also affected by factors such as the surface structure and roughness of the workpiece. Please take the measured data as the standard;
***: The working air pressure and the surface roughness of the workpiece in the usage scenario may have different degrees of impact on the life-time. Please configure Rochu control Unit. Do not exceed the safe air pressure.

DAC Module
(Direct-through)



DAS Module
(Precise Positioning Direct-through)

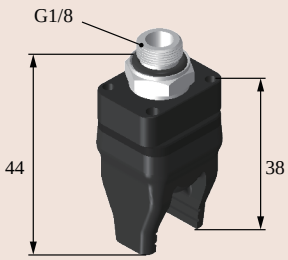

DAL Module
(Side-through)

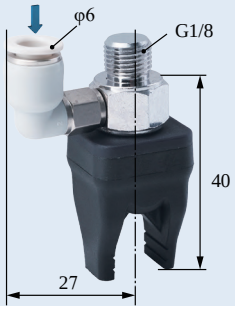

DAM Module
(Precise Positioning Multiple-through)

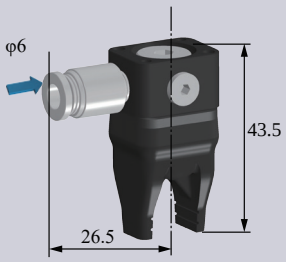

DAC
Rigid Connection Installation

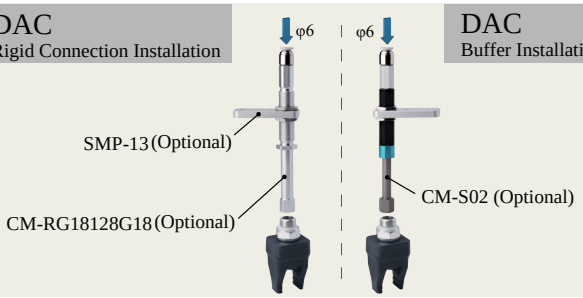

DAC
Buffer Installation

DAS
Matrix Installation

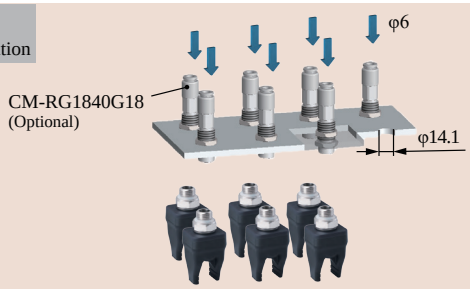

DAC Scara Scara Robot Arm Installation

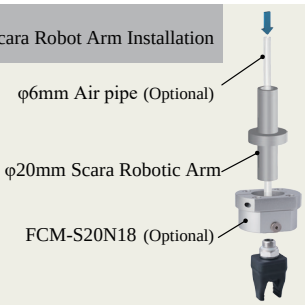

DAL
Robot Arm Flange Side-through Installation

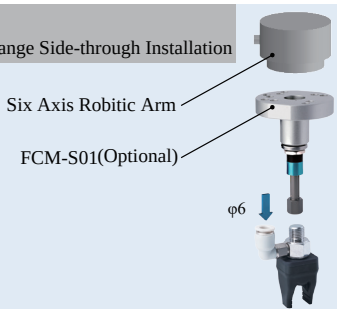

DAS Detection

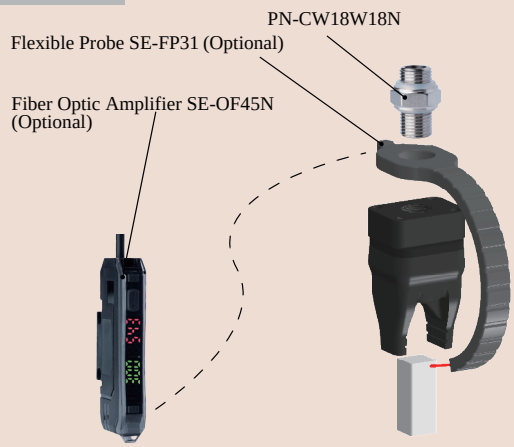

DAM Precise Positioning + Detection

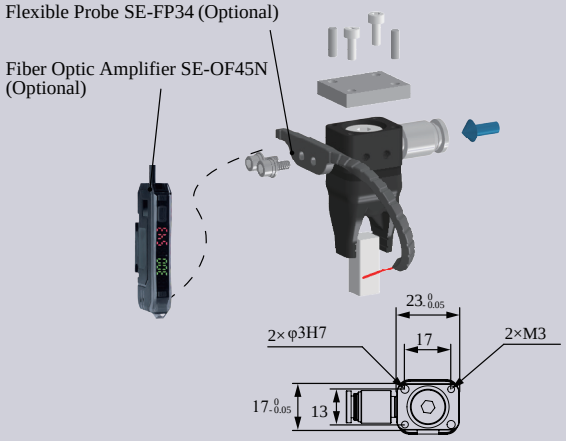

DAS Precise Positioning and Direct-through Installation

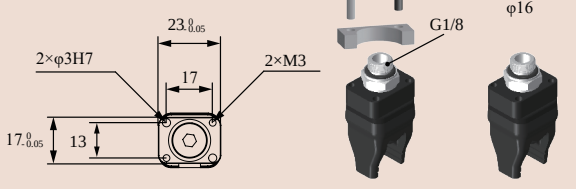

B-2G1012[LH]/SN

DAC-2G1217[H]/SN Direct-through H Type	DAS-2G1217[H]/SN Direct-through Precision Positioning H Type	DAL-2G1217[H]/SN Side-through H Type	DAM-2G1217[H]/SN Multi-way Precision Positioning H Type
DAC-2G1217[HAS]/SN Direct-through Dust-free H Type	DAS-2G1217[HAS]/SN Direct-through Precision Positioning Dust-free H Type	DAL-2G1217[HAS]/SN Side-through Dust-free H Type	DAM-2G1217[HAS]/SN Multi-way Precision Positioning Dust-free H Type
			
Weight 19.3g	Weight 26.5g	Weight 33.8g	Weight 30.7g

- Fingertip open under pressure and clamped in a vacuum. Fingertip distance G can be adjusted by working pressure.It is suggested to be used with Rochu control unit.
- Soft beak material is divided into Normal Material [H] and Dust-free Normal Material [HAS]. When the workpiece is light, or very soft, easy to adhere to adsorp on the soft beak, Dust-free Normal Material [HAS] is preferred.
- Food-grade material, direct food contact approved.

Scan to watch videos

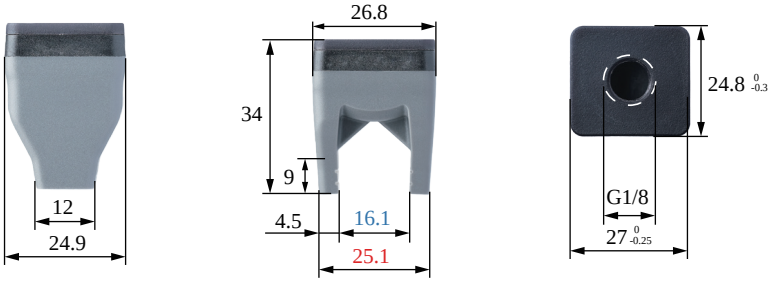

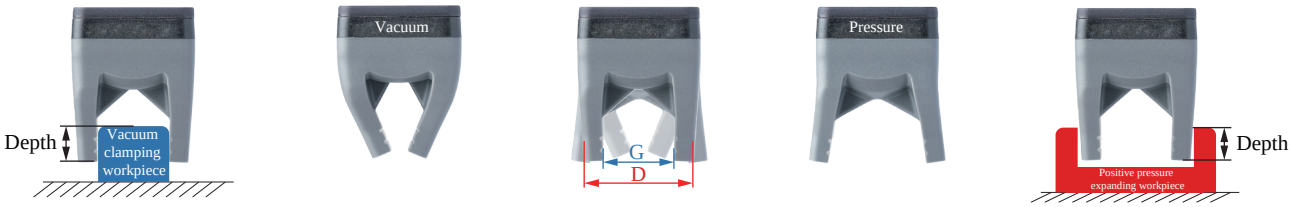

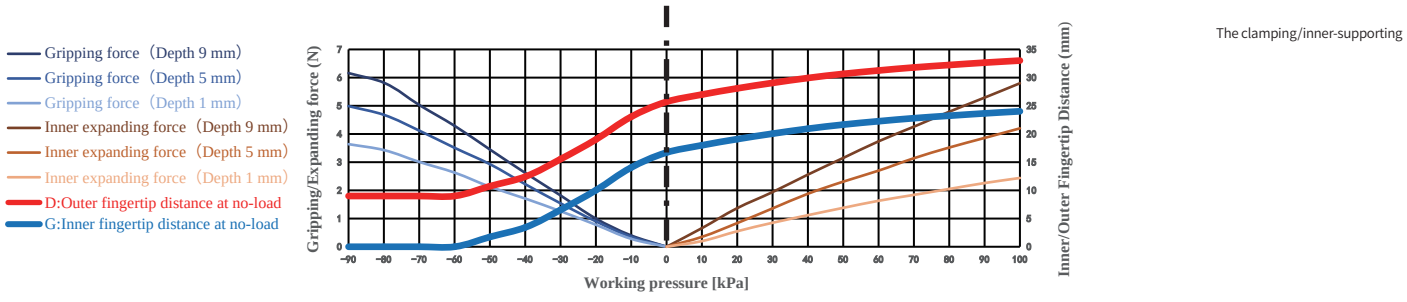

Gripping range	0-18mm	Gripping force	0-6.2N	Theoretical gripping load**	0-246g	Ideal gripping workpiece size*	16.5mm
Internal gripping range	25-32mm	Internal gripping force	0-5.8N	Theoretical internal gripping load**	0-232g	Ideal internal gripping workpiece size*	26mm
Joint size	G1/8	Life time***	1.5 million times	Contact Temperature	<220°C	Safe pressure***	<100kPa

DAC Module
(Direct-through)

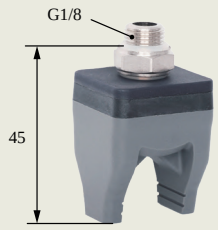

DAS Module
(Precise Positioning Direct-through)



DALModule
(Side-through)

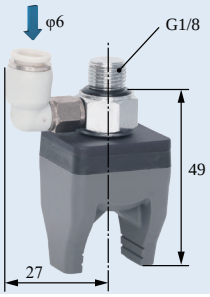

DAM Module
(Precise Positioning Multiple-through)

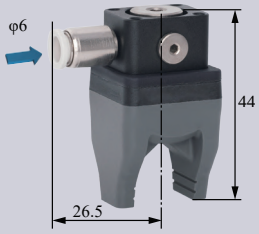

DAC
Rigid Connection Installation

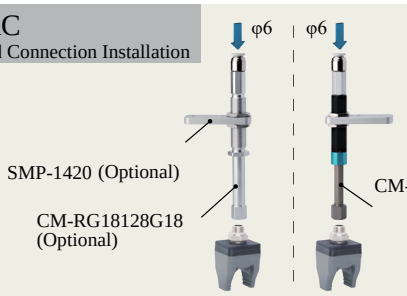

DAC
Buffer Installation

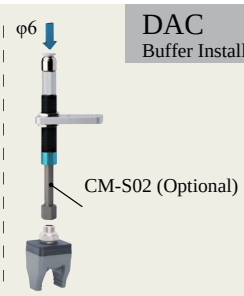

DAS
Matrix Installation

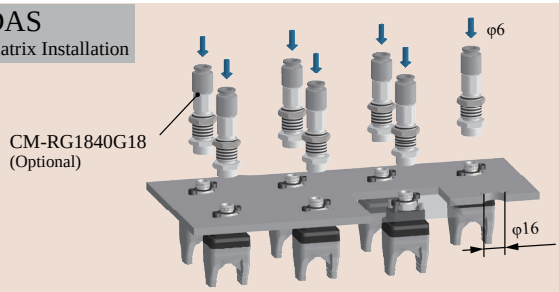

DAC Scara Scara Robot Arm Installation

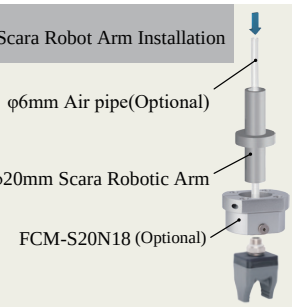

DAL
Robot Arm Flange Side-through Installation

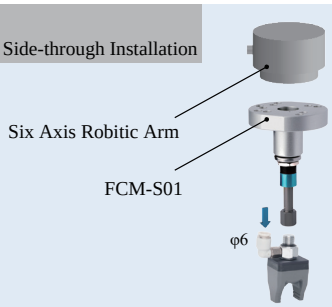

DAS Detection

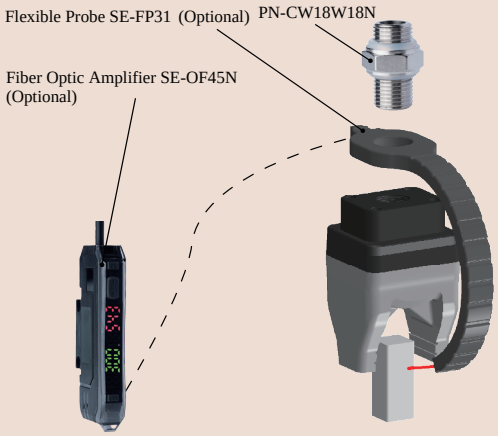

DAM Precise Positioning + Detection

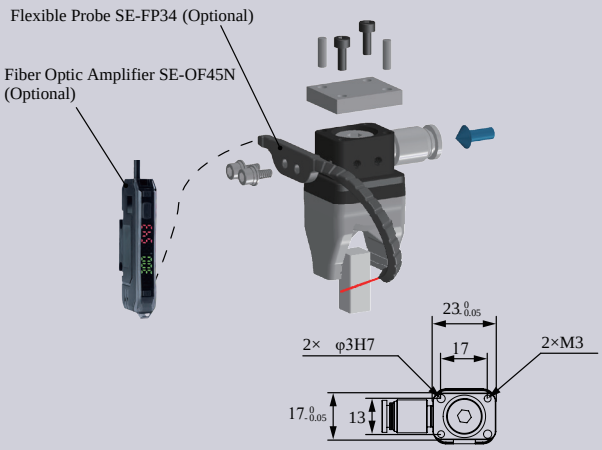

DAS Precise Positioning and Direct-through Installation

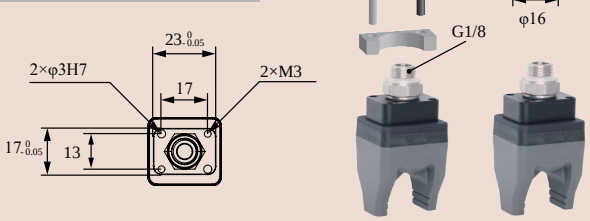

DAC-2G1113[H]/SN Direct-through H Type	DAS-2G1113[H]/SN Direct-through Precision Positioning H Type	DAL-2G1113[H]/SN Side-through H Type	DAM-2G1113[H]/SN Multi-way Precision Positioning H Type
DAC-2G1113[HAS]/SN Direct-through Dust-free H Type	DAS-2G1113[HAS]/SN Direct-through Precision Positioning Dust-free H Type	DAL-2G1113[HAS]/SN Side-through Dust-free H Type	DAM-2G1113[HAS]/SN Multi-way Precision Positioning Dust-free H Type
	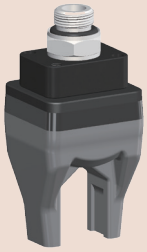		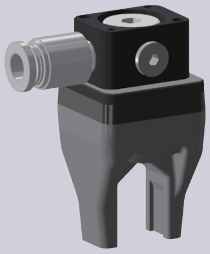
Weight 19g	Weight 28.2g	Weight 30.4g	Weight 29.85g

- Fingertip open under pressure and clamped in a vacuum. Fingertip distance G can be adjusted by working pressure.It is suggested to be used with Rochu control unit.
- Soft beak material is divided into Normal Material [H] and Dust-free Normal Material [HAS]. When the workpiece is light, or very soft, easy to adhere to adsorp on the soft beak, Dust-free Normal Material [HAS] is preferred.
- Food-grade material, direct food contact approved.

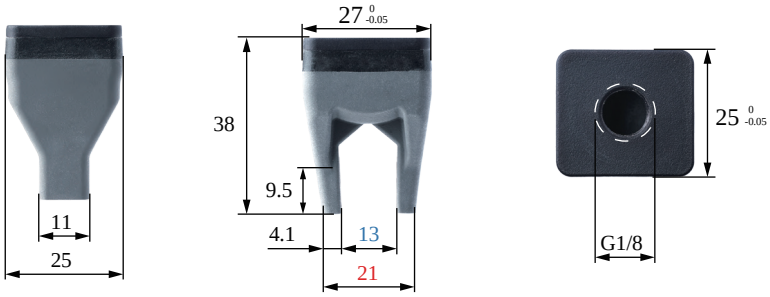

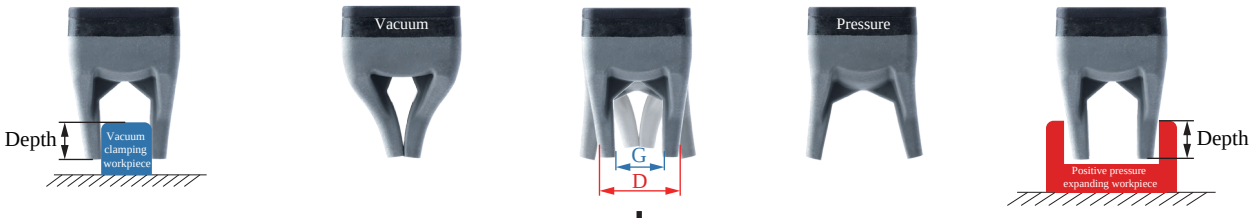

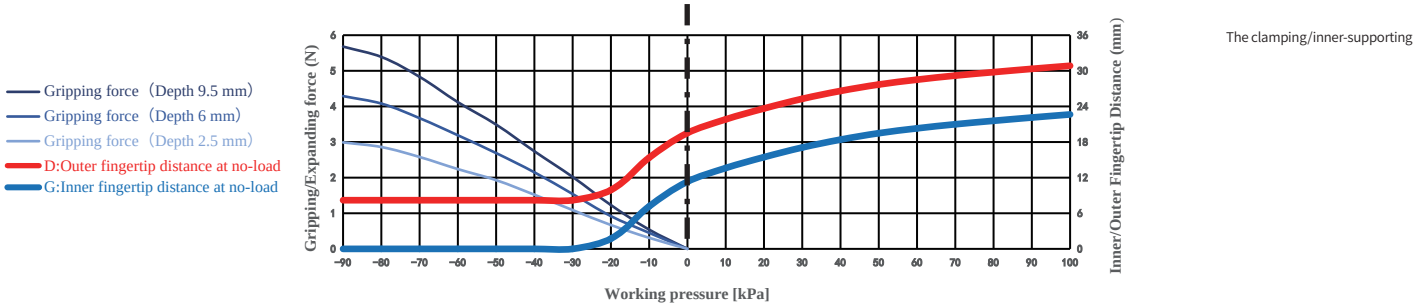

Gripping range	0-16mm	Gripping force	0-5.7N	Theoretical gripping load**	0-227g	Ideal gripping workpiece size*	13mm
Internal gripping range	—	Internal gripping force	—	Theoretical internal gripping load**	—	Ideal internal gripping workpiece size*	—
Joint size	G1/8	Life time***	1.5 million times	Contact Temperature	<220℃	Safe pressure***	<100kPa

DAC Module
(Direct-through)



DAS Module
(Precise Positioning Direct-through)

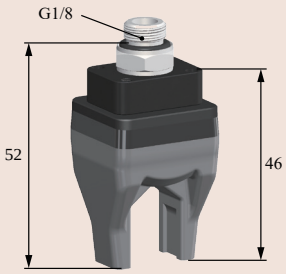

DALModule
(Side-through)

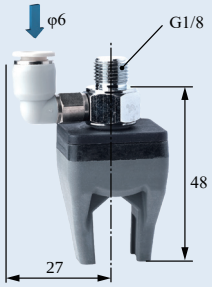

DAM Module
(Precise Positioning Multiple-through)

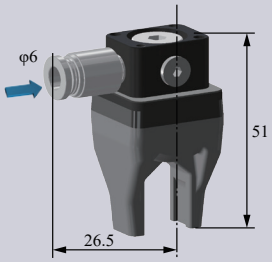

DAC
Rigid Connection Installation

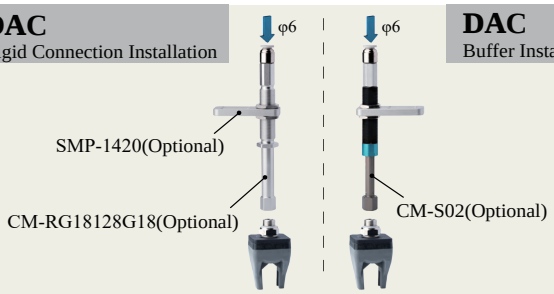

DAC
Buffer Installation

Matrix Installation

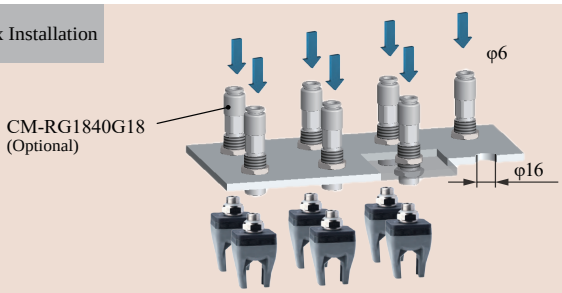

DAC Scara Scara Robot Arm Installation

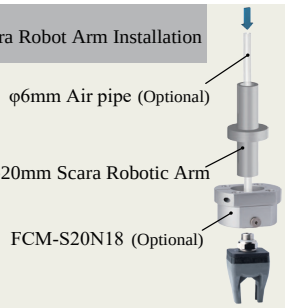

DAL
Robot Arm Flange Side-through Installation

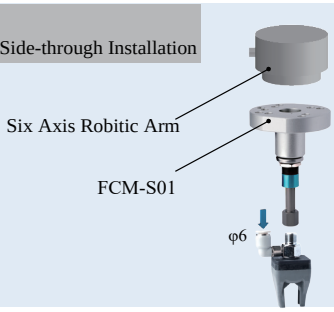

DAS Detection

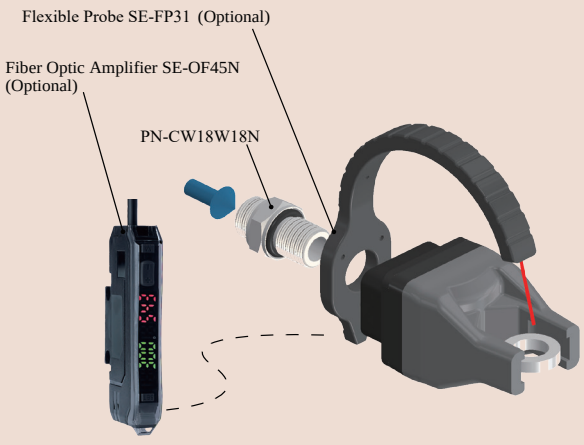

DAM Precise Positioning + Detection

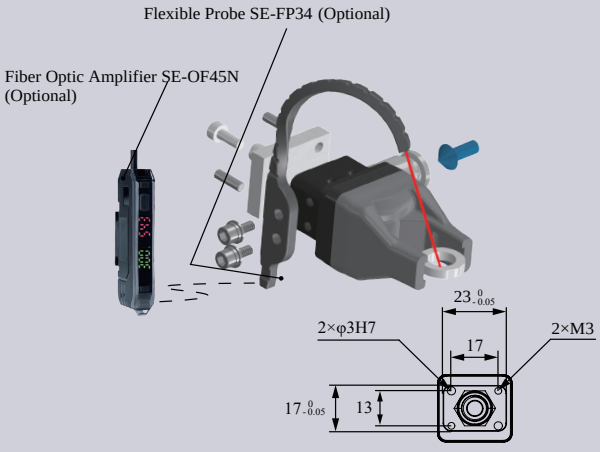

DAS Precise Positioning and Direct-through Installation

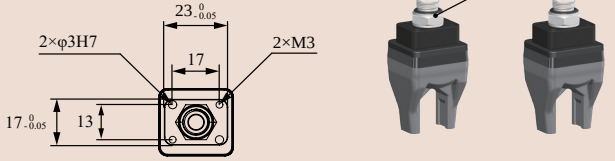

DAC-2N0810[H]/SC+NN1604P[H] Direct-through H Type(With fingertips)	DAC-2N0810[H]/SC Direct-through Precision Positioning H Type	DAS-2N0810[H]/SC+NN1604P[H] Side-through H Type	DAS-2N0810[H]/SC Multi-way Precision Positioning H Type
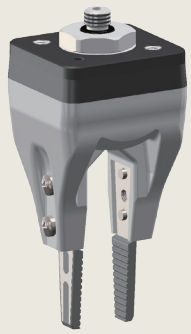	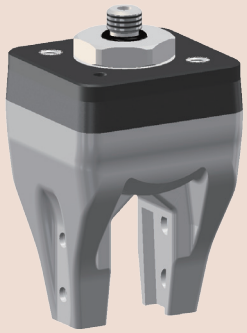	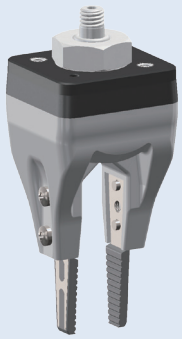	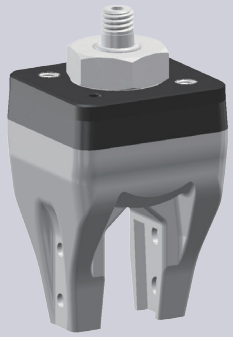
Weight 28.2g	Weight 25g	Weight 23.8g	Weight 20.6g

- Fingertip open under pressure and clamped in a vacuum. Fingertip distance G can be adjusted by working pressure.It is suggested to be used with Rochu control unit.
- Suitable for workpieces with complex shapes. Profiled fingertips can be custom-designed according to the workpiece contour and installed via the threaded holes on the soft gripper fingers. Rigid materials such as plastic or metal can be selected for the profiled fingertips based on the workpiece requirements.

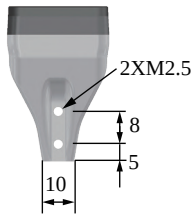

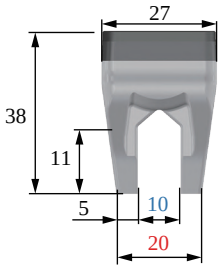

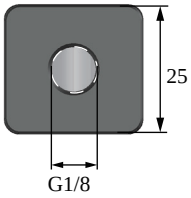

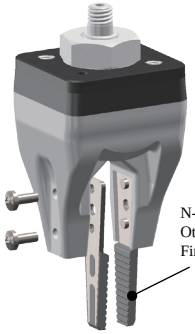

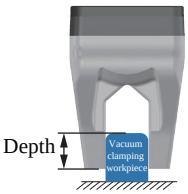









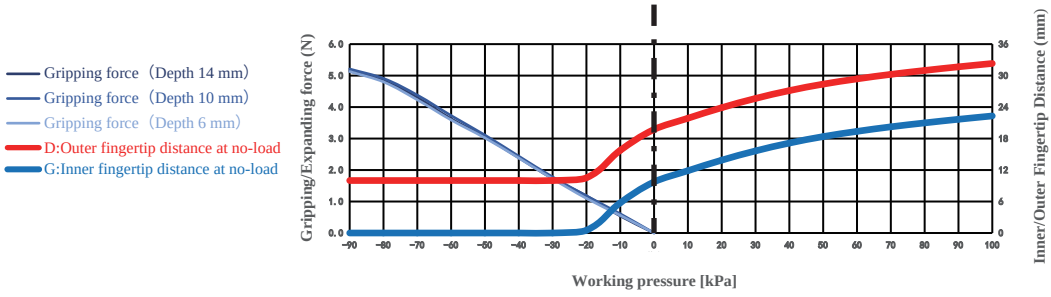

The clamping/inner-supporting force data of this product are measured based on the ideal workpiece size.

Gripping range	0-20mm	Gripping force	0-7.5N	Theoretical gripping load**	0-299g	Ideal gripping workpiece size*	8mm
Internal gripping range	—	Internal gripping force	—	Theoretical internal gripping load**	—	Ideal internal gripping workpiece size*	—
Joint size	G1/8	Life time***	1.5 million times	Contact Temperature	<220℃	Safe pressure***	<100kPa

The width of the cuboid that generates the maximum gripping force (two-finger gripping), the outer diameter of the cylinder (multi-finger gripping), the width of the square hole (two-finger internal gripping), or the inner diameter of the circular hole (multi-finger internal gripping);

DAC + Soft Tweezer Module (Direct-through)

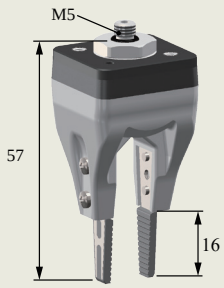

DAC Module (Direct-through)

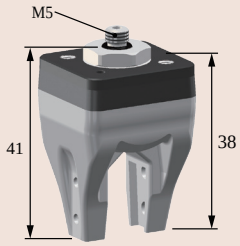

DAS + Soft Tweezer Module (Precision Positioning Straight-through)

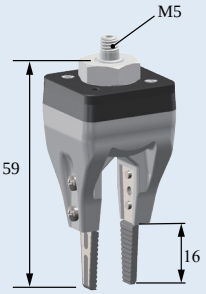

DAS Module (Precision Positioning Straight-through)

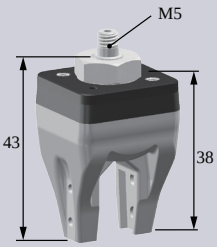

DAC Inspection + Soft Tweezer Installation

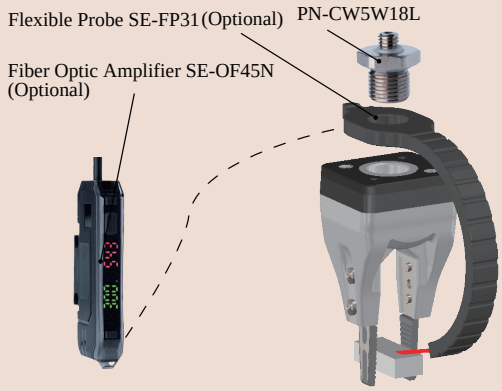

DAS Precise Positioning Hard Rod Installation

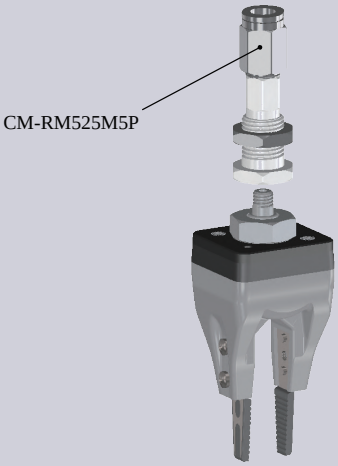

DAC Precise Positioning Partition Straight-through Installation

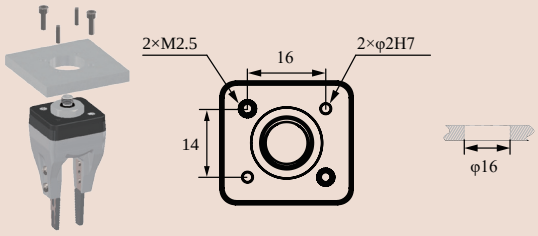

DAC Side-pass adapter installation

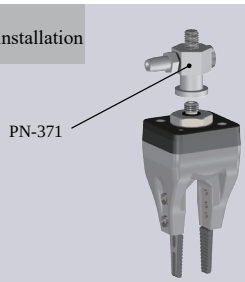

Rigid Connection Installation

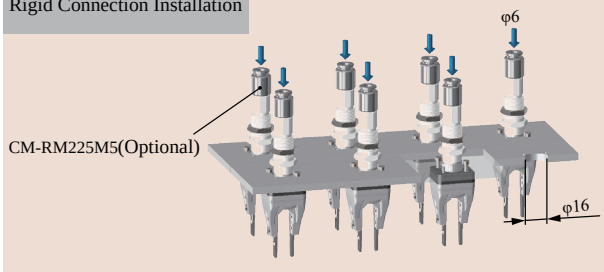

Robotic Arm Flange Side Fitting Installation

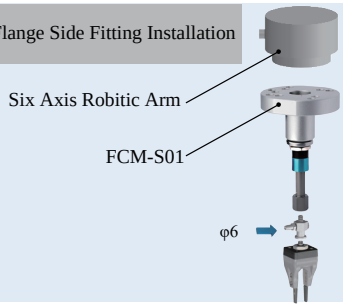

Scara Robotic Arm Installation

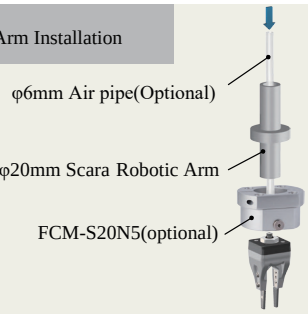

Rigid Connection Installation

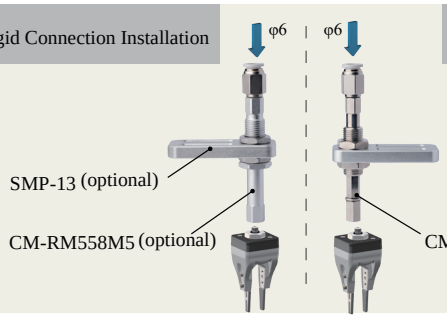

Buffer Installation

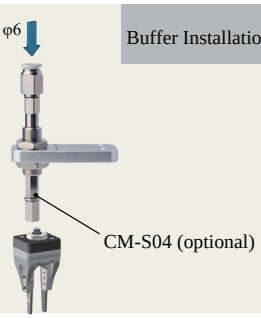

DAC-2N0810[LH]/SC+NN1604P[H] Straight anti-static reinforced type (including fingertips)	DAC-2N0810[LH]/SC Straight anti-static reinforced type	DAS-2N0810[LH]/SC+NN1604P[H] Straight precision positioning anti-static reinforced type (including fingertips)	DAS-2N0810[LH]/SC Straight precision positioning anti-static reinforced type
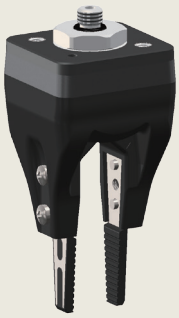	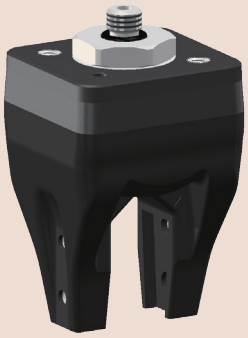		
Weight 28.2g	**Weight** 25g	**Weight** 23.8g	**Weight** 20.6g

Product features

- Fingertip open under pressure and clamped in a vacuum. Fingertip distance G can be adjusted by working pressure.It is suggested to be used with Rochu control unit.
- Suitable for workpieces with complex shapes. Profiled fingertips can be custom-designed according to the workpiece contour and installed via the threaded holes on the soft gripper fingers. Rigid materials such as plastic or metal can be selected for the profiled fingertips based on the workpiece requirements.

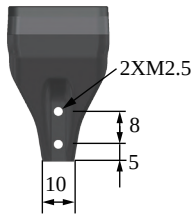

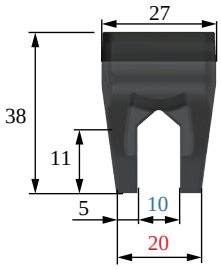

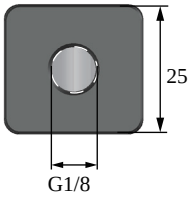



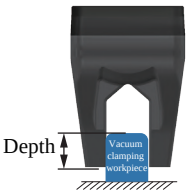









The clamping/inner-supporting force data of this product are measured based on the ideal workpiece size.
When the workpiece size deviates from the ideal value, the clamping/inner-supporting force decreases linearly.
If the workpiece size exceeds the clamping range or inner-supporting range, the clamping/inner-supporting force drops to 0.

Paremeter

Gripping range	0-16mm	Gripping force	0-5.14N	Theoretical gripping load**	0-206g	Ideal gripping workpiece size*	8mm
Internal gripping range	—	Internal gripping force	—	Theoretical internal gripping load**	—	Ideal internal gripping workpiece size*	—
Joint size	G1/8	Life time***	1.5 million times	Contact Temperature	<220℃	Safe pressure***	<100kPa

*: The width of the cuboid that generates the maximum gripping force (two-finger gripping), the outer diameter of the cylinder (multi-finger gripping), the width of the square hole (two-finger internal gripping), or the inner diameter of the circular hole (multi-finger internal gripping);
**: Only the theoretical load of the ideal workpiece under standard working conditions is marked for reference and comparison. The real load capacity is also affected by factors such as the surface structure and roughness of the workpiece. Please take the measured data as the standard;
***: The working air pressure and the surface roughness of the workpiece in the usage scenario may have different degrees of impact on the life-time. Please configure Rochu control Unit. Do not exceed the safe air pressure.

DAC + Soft Tweezer Module
(Direct-through)

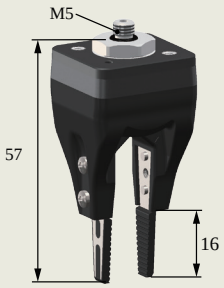

DAC Module
(Direct-through)

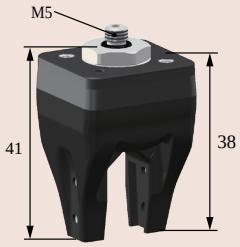

DAS + Soft Tweezer Module
(Precision Positioning Straight-through)

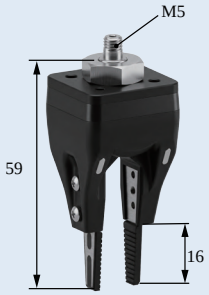

DAS Module
(Precision Positioning Straight-through)

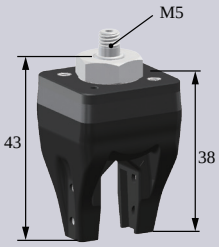

DAC Inspection + Soft Tweezer Installation

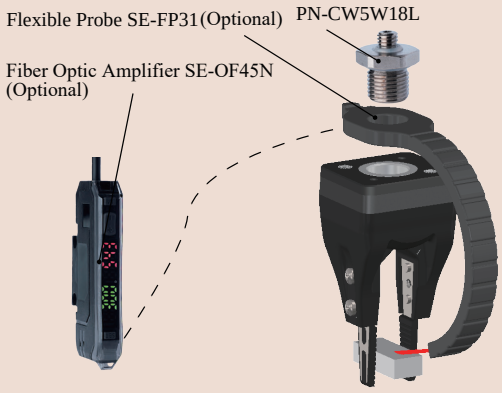

DAS Precise Positioning Hard Rod Installation

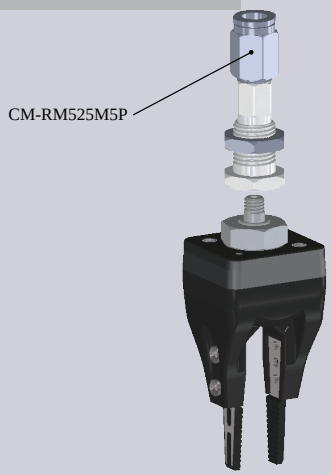

DAC Precise Positioning Partition
Straight-through Installation

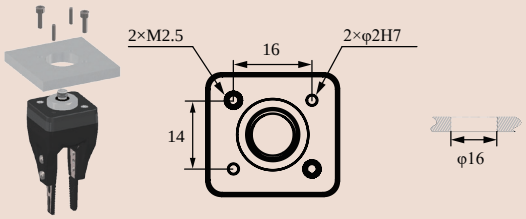

DAC Side-pass adapter installation

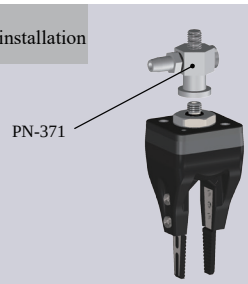

Rigid Connection Installation

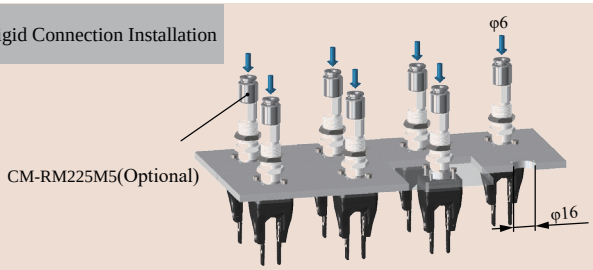

Robotic Arm Flange Side Fitting Installation

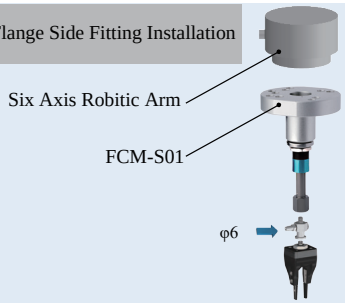

Scara Robotic Arm Installation

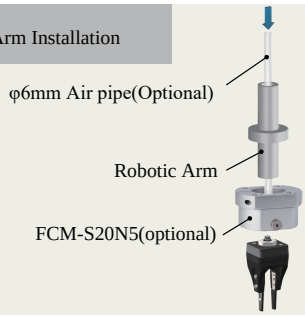

Rigid Connection Installation

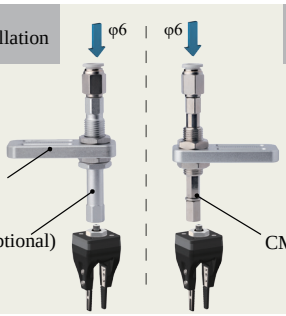

Buffer Installation



DAC-21812[P] Direct-through P Type	DAL-21812[P] Side-through P Type
DAC-21812[PAS] Direct-through Dust-free P Type	DAL-21812[PAS] Side-through Dust-free P Type

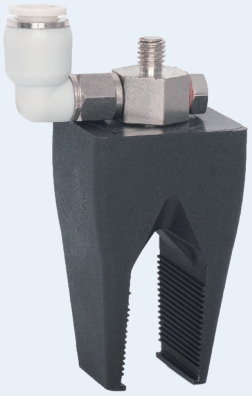

Weight	23g	Weight	31.4g

Product features

- Fingertip open under pressure and clamped in a vacuum. Fingertip distance G can be adjusted by working pressure.It is suggested to be used with Rochu control unit.
- Soft beak material is divided into Normal Material [P] and Dust-free Normal Material [PAS]. When the workpiece is light, or very soft, easy to adhere to adsorp on the soft beak, Dust-free Normal Material [PAS] is preferred.
- Food-grade material, direct food contact approved.

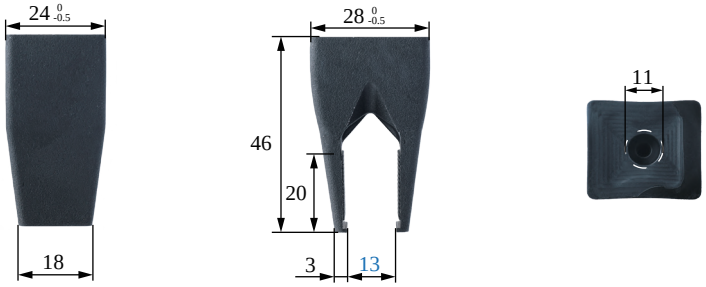



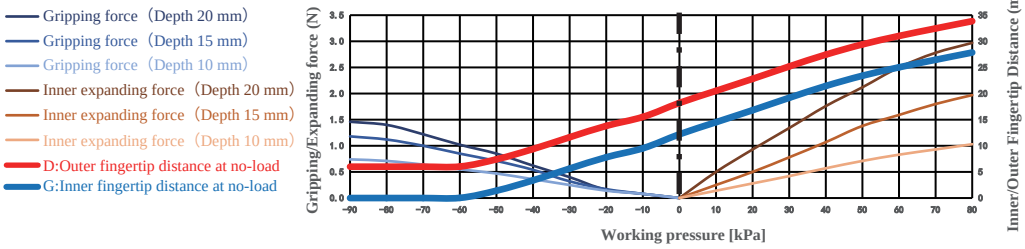

The clamping/inner-supporting force data of this product are measured based on the ideal workpiece size.
When the workpiece size deviates from the ideal value, the clamping/inner-supporting force decreases linearly.
If the workpiece size exceeds the clamping range or inner-supporting range, the clamping/inner-supporting force drops to 0.

Paremeter

Gripping range	0-21mm	Gripping force	0-1.5N	Theoretical gripping load**	0-58g	Ideal gripping workpiece size*	13mm
Internal gripping range	11-31mm	Internal gripping force	0-3N	Theoretical internal gripping load**	0-119g	Ideal internal gripping workpiece size*	19mm
Joint size	M5	Life time***	1.5 million times	Contact Temperature	<220°C	Safe pressure***	<80kPa

*: The width of the cuboid that generates the maximum gripping force (two-finger gripping), the outer diameter of the cylinder (multi-finger gripping), the width of the square hole (two-finger internal gripping), or the inner diameter of the circular hole (multi-finger internal gripping);
**: Only the theoretical load of the ideal workpiece under standard working conditions is marked for reference and comparison. The real load capacity is also affected by factors such as the surface structure and roughness of the workpiece. Please take the measured data as the standard;
***: The working air pressure and the surface roughness of the workpiece in the usage scenario may have different degrees of impact on the life-time. Please configure Rochu control Unit. Do not exceed the safe air pressure.

DAC Straight Fitting Installation

Scan to watch videos

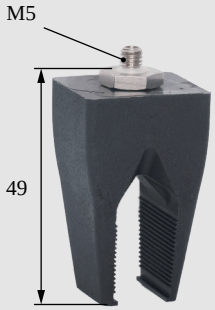

DAL Side Fitting Installation

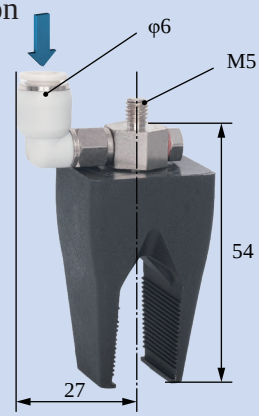

Scara Robotic Arm Installation

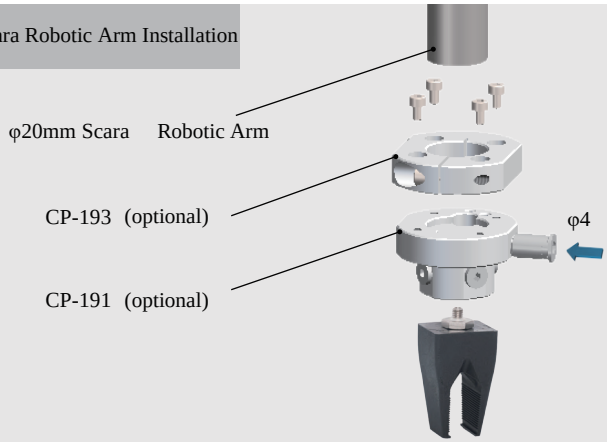

Robotic Arm Flange Side Fitting Installation

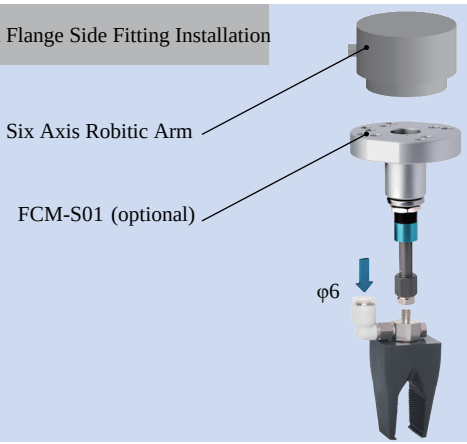

Rigid Connection Installation

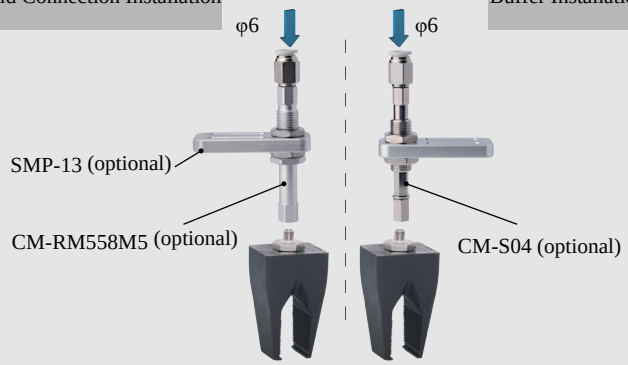

Buffer Installation

Matrix Installation

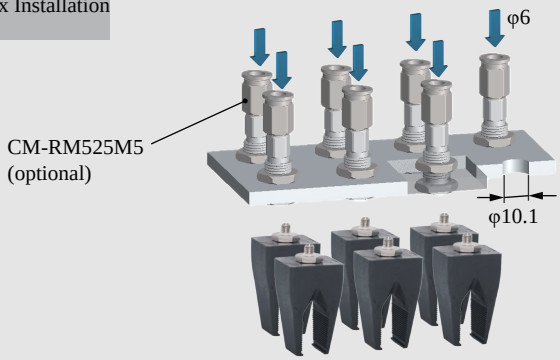

Installation of Optical Fiber Sensors

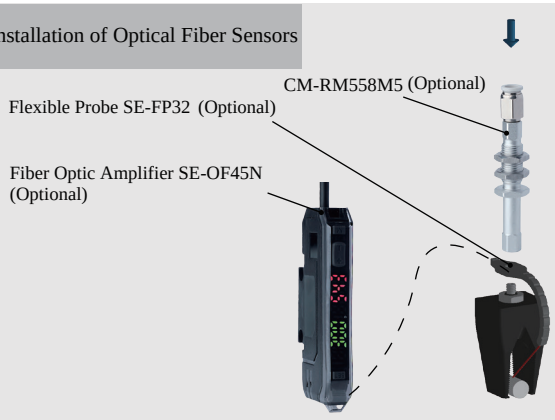



DAC-21812[P]/M Direct-through P Type	DAL-21812[P]/M Side-through P Type
DAC-21812[PAS]/M Direct-through Dust-free P Type	DAL-21812[PAS]/M Side-through Dust-free P Type
Weight 39.6g	**Weight** 40.4g



Product features

- Fingertip open under pressure and clamped in a vacuum. Fingertip distance G can be adjusted by working pressure.It is suggested to be used with Rochu control unit.
- Soft beak material is divided into Normal Material [P] and Dust-free Normal Material [PAS]. When the workpiece is light, or very soft, easy to adhere to adsorp on the soft beak, Dust-free Normal Material [PAS] is preferred.
- Food-grade material, direct food contact approved.

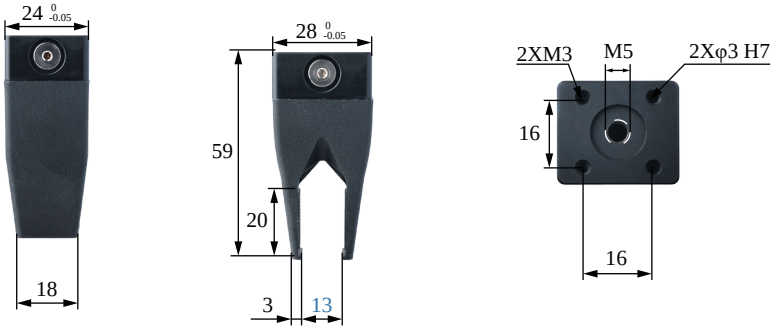



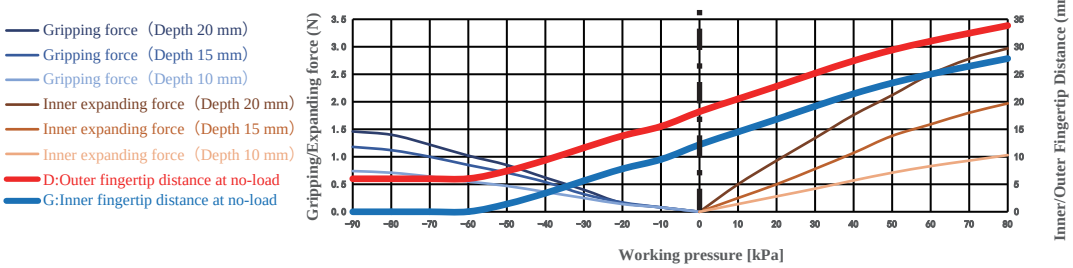

The clamping/inner-supporting force data of this product are measured based on the ideal workpiece size.
When the workpiece size deviates from the ideal value, the clamping/inner-supporting force decreases linearly.
If the workpiece size exceeds the clamping range or inner-supporting range, the clamping/inner-supporting force drops to 0.

Paremeter

Gripping range	0-21mm	Gripping force	0-1.5N	Theoretical gripping load**	0-58g	Ideal gripping workpiece size*	13mm
Internal gripping range	11-31mm	Internal gripping force	0-3N	Theoretical internal gripping load**	0-119g	Ideal internal gripping workpiece size*	19mm
Joint size	M5	Life time***	1.5 million times	Contact Temperature	<220℃	Safe pressure***	<80kPa

*: The width of the cuboid that generates the maximum gripping force (two-finger gripping), the outer diameter of the cylinder (multi-finger gripping), the width of the square hole (two-finger internal gripping), or the inner diameter of the circular hole (multi-finger internal gripping);
**: Only the theoretical load of the ideal workpiece under standard working conditions is marked for reference and comparison. The real load capacity is also affected by factors such as the surface structure and roughness of the workpiece. Please take the measured data as the standard;
***: The working air pressure and the surface roughness of the workpiece in the usage scenario may have different degrees of impact on the life-time. Please configure Rochu control Unit. Do not exceed the safe air pressure.

DAC Straight Fitting Installation

Scan to watch videos



DAL Side Fitting Installation

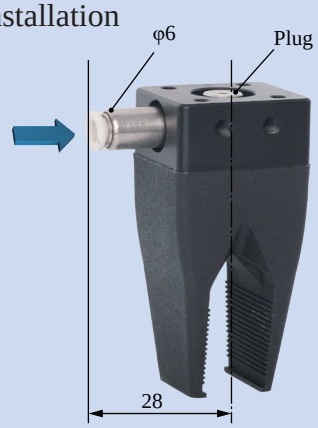

Rigid Connection Installation

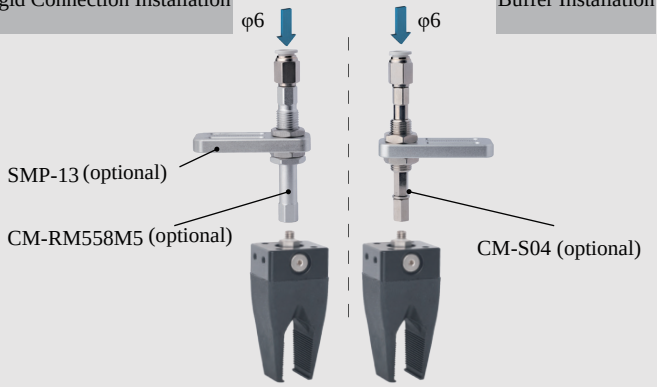

Buffer Installation

Side Access Partition Installation

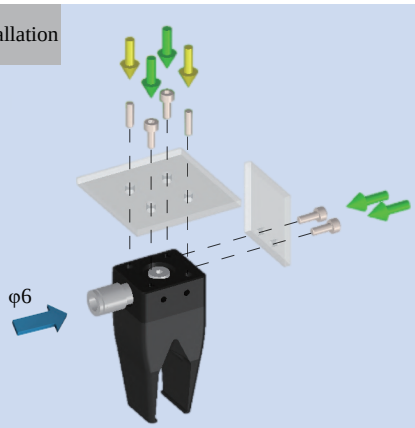

Precise Positioning Installation

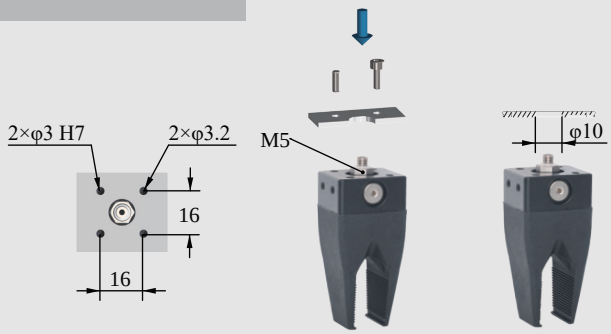

Matrix Installation

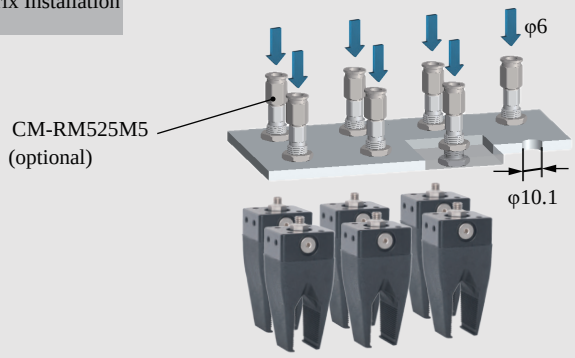

Installation of Optical Fiber Sensors

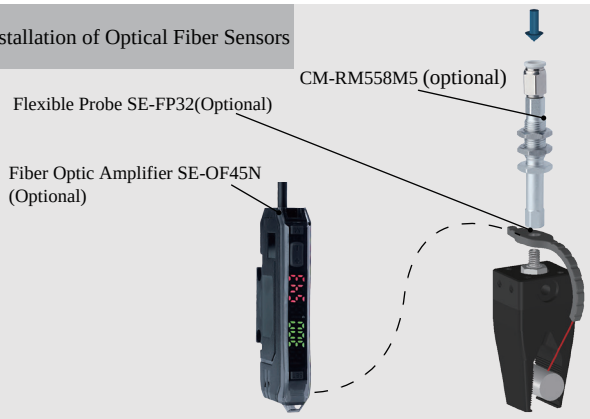



DAC-2G1121[HB]/S Straight-through Basic Type		DAL-2G1121[HB]/S Side-through Basic Type	
Weight	23.5g	**Weight**	35g



Product features

- Vacuum-driven, it works with a vacuum generator or pump. Operating like a suction cup, its clamping force is precisely adjustable via vacuum degree control.

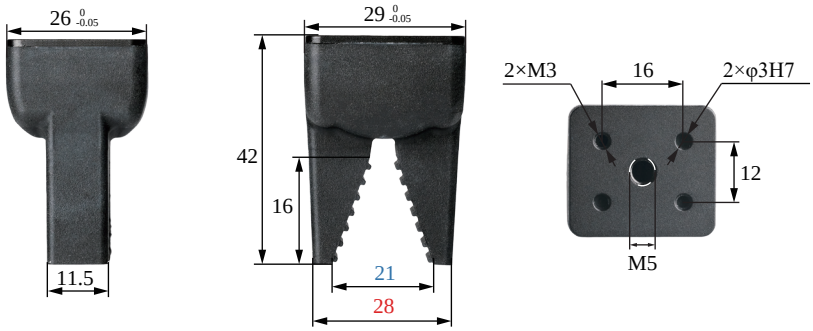



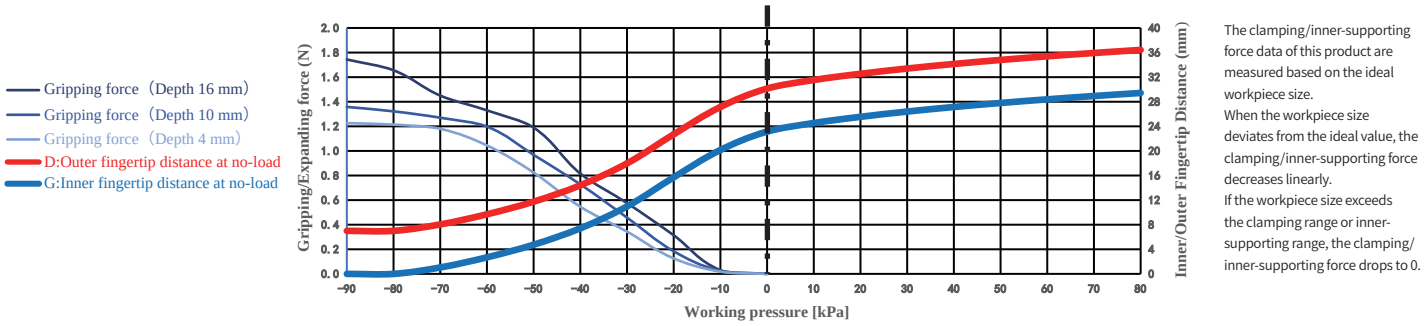

The clamping/inner-supporting force data of this product are measured based on the ideal workpiece size.
When the workpiece size deviates from the ideal value, the clamping/inner-supporting force decreases linearly.
If the workpiece size exceeds the clamping range or inner-supporting range, the clamping/inner-supporting force drops to 0.

Paremeter

Gripping range	0-18mm	Gripping force	0-1.7N	Theoretical gripping load**	0-70g	Ideal gripping workpiece size*	10mm
Internal gripping range	—	Internal gripping force	—	Theoretical internal gripping load**	—	Ideal internal gripping workpiece size*	—
Joint size	M5	Life time***	1.5 million times	Contact Temperature	<220°C	Safe pressure***	Use under single negative pressure

*: The width of the cuboid that generates the maximum gripping force (two-finger gripping), the outer diameter of the cylinder (multi-finger gripping), the width of the square hole (two-finger internal gripping), or the inner diameter of the circular hole (multi-finger internal gripping);
**: Only the theoretical load of the ideal workpiece under standard working conditions is marked for reference and comparison. The real load capacity is also affected by factors such as the surface structure and roughness of the workpiece. Please take the measured data as the standard;
***: The working air pressure and the surface roughness of the workpiece in the usage scenario may have different degrees of impact on the life-time. Please configure Rochu control Unit. Do not exceed the safe air pressure.

DAC Straight Fitting Installation

Scan to watch videos

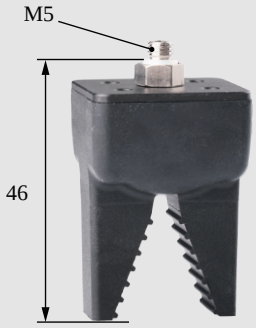

DAL Side Fitting Installation

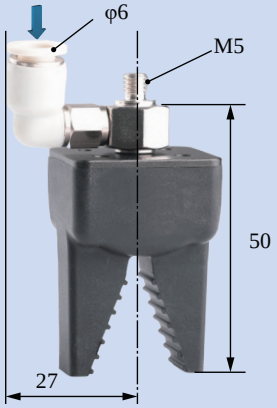

Scara Robotic Arm Installation

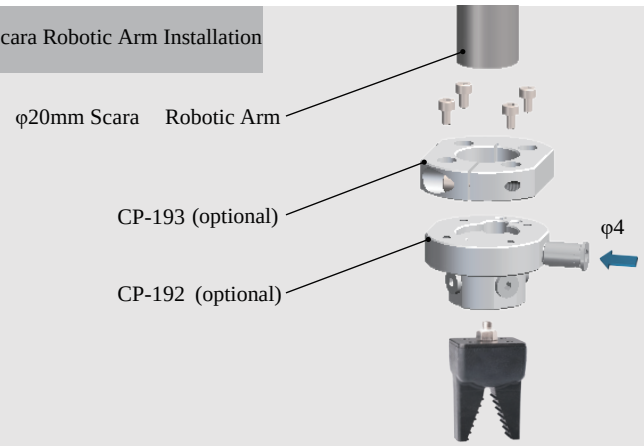

Robotic Arm Flange Side Fitting Installation

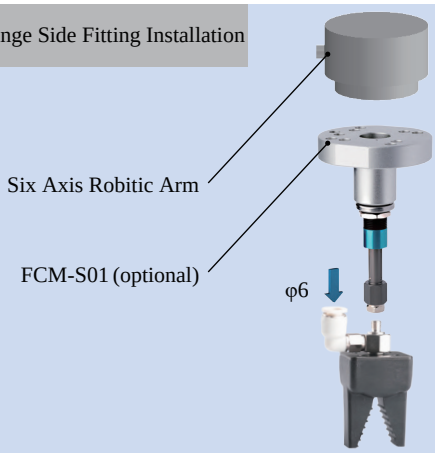

Rigid Connection Installation

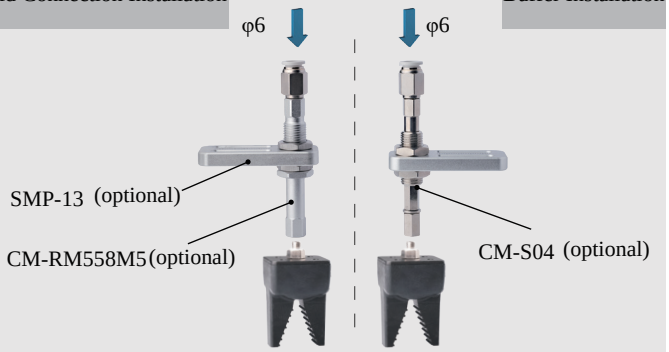

Buffer Installation

Matrix Installation

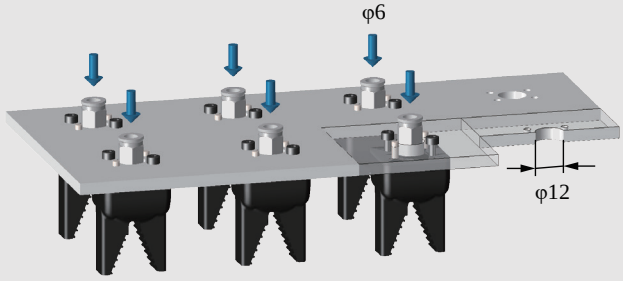

Precise Positioning Installation

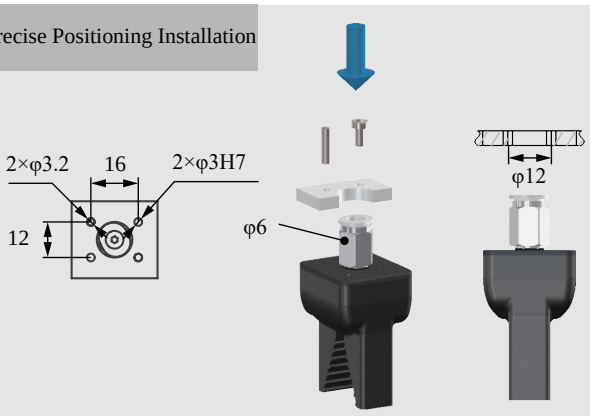

Installation of Optical Fiber Sensors



B-2G1121[HB]/S



DAC-22219[P]/M Direct-through P Type		DAL-22219[P]/M Side-through P Type	
DAC-22219[PAS]/M Direct-through Dust-free P Type		DAL-22219[PAS]/M Side-through Dust-free P Type	
Weight	48.3g	**Weight**	49.3g



Product features

- Fingertip open under pressure and clamped in a vacuum. Fingertip distance G can be adjusted by working pressure.It is suggested to be used with Rochu control unit.
- Soft beak material is divided into Normal Material [P] and Dust-free Normal Material [PAS]. When the workpiece is light, or very soft, easy to adhere to adsorp on the soft beak, Dust-free Normal Material [PAS] is preferred.
- Food-grade material, direct food contact approved.

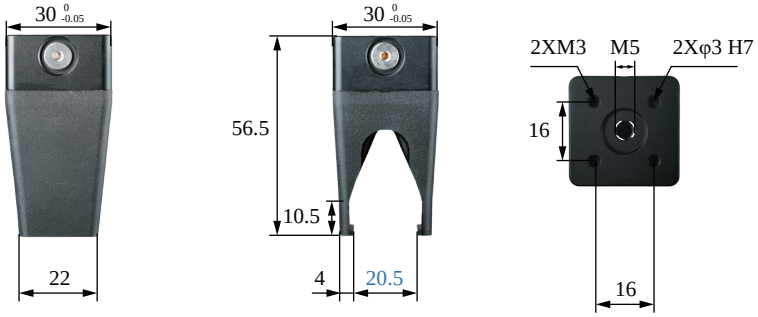

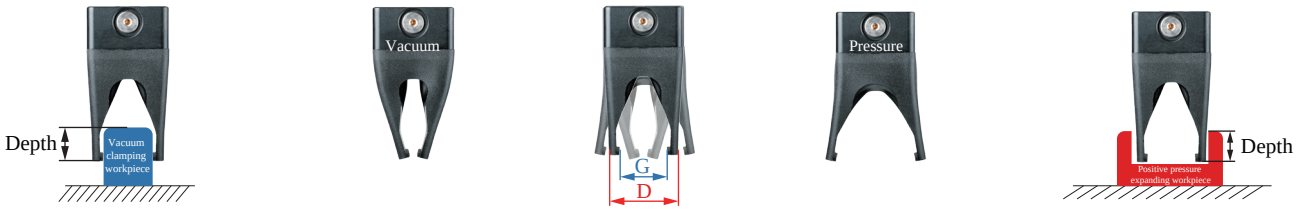

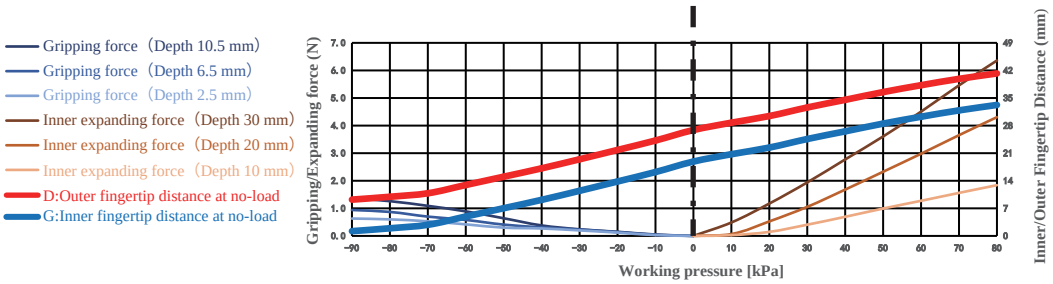

The clamping/inner-supporting force data of this product are measured based on the ideal workpiece size.
When the workpiece size deviates from the ideal value, the clamping/inner-supporting force decreases linearly.
If the workpiece size exceeds the clamping range or inner-supporting range, the clamping/inner-supporting force drops to 0.

Paremeter

Gripping range	4-29.5mm	Gripping force	0-1.4N	Theoretical gripping load**	0-55g	Ideal gripping workpiece size*	20mm
Internal gripping range	13.5-38mm	Internal gripping force	0-6.4N	Theoretical internal gripping load**	0-254g	Ideal internal gripping workpiece size*	30mm
Joint size	M5	Life time***	1.5 million times	Contact Temperature	<220°C	Safe pressure***	<80kPa

*: The width of the cuboid that generates the maximum gripping force (two-finger gripping), the outer diameter of the cylinder (multi-finger gripping), the width of the square hole (two-finger internal gripping), or the inner diameter of the circular hole (multi-finger internal gripping);
**: Only the theoretical load of the ideal workpiece under standard working conditions is marked for reference and comparison. The real load capacity is also affected by factors such as the surface structure and roughness of the workpiece. Please take the measured data as the standard;
***: The working air pressure and the surface roughness of the workpiece in the usage scenario may have different degrees of impact on the life-time. Please configure Rochu control Unit. Do not exceed the safe air pressure.

DAC Straight Fitting Installation

Scan to watch videos

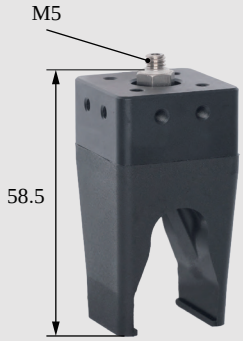

DAL Side Fitting Installation

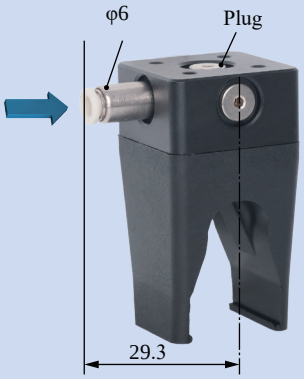

Rigid Connection Installation

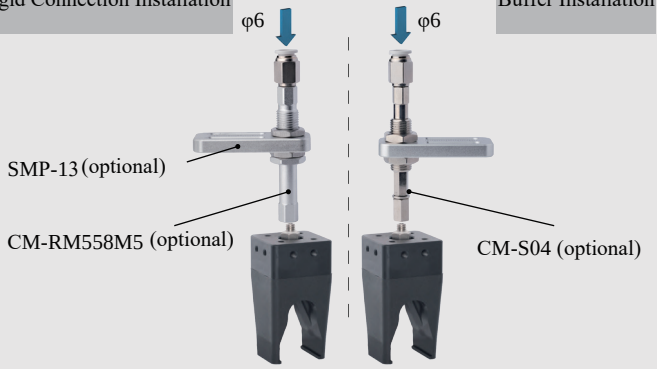

Buffer Installation

Side Access Partition Installation

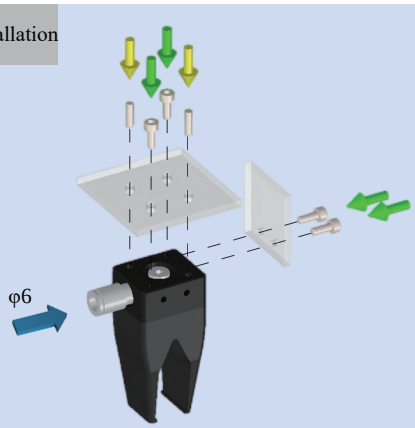

Precise Positioning Installation

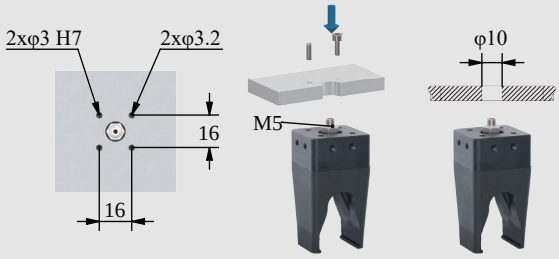

Matrix Installation

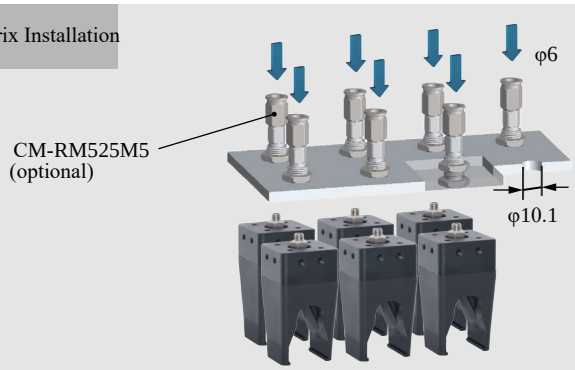

Installation of Optical Fiber Sensors

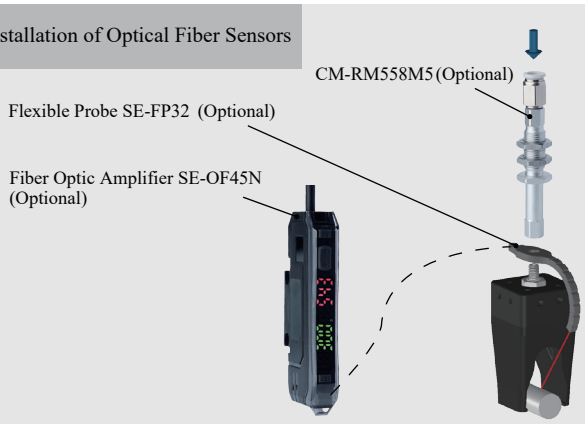



DAC-2TN1006[LH]/M Direct-through Anti-static H Type		DAL-2TN1006[LH]/M Side-through Anti-static H Type	
DAC-2TN1006[LHAS]/M Direct-through Anti-static Dust-free H Type		DAL-2TN1006[LHAS]/M Side-through Anti-static Dust-free H Type	
Weight	79.8g	**Weight**	79.5g



Product features

- Suitable for complex-shaped workpieces: contour-following fingers (matched to the workpiece shape, installed via flexible claw tip screw holes) can use appropriate rigid materials like plastic or metal.
- Fingertips open under pressure state and clamp in a vacuum. Outer fingertips distance D can be adjusted by working pressure.It is suggested to be used with Rochu control unit.
- The Anti-static material meets the requirements of the national standard GB/T11210-2014, with a point-to-point resistance of 0.1-1000MΩ. The Anti-static Dust-free type [LHAS] is more suitable for dealing with workpieces that have dustproof requirements or are miniature and lightweight.

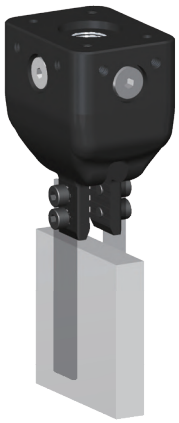

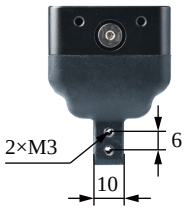

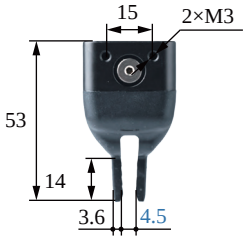

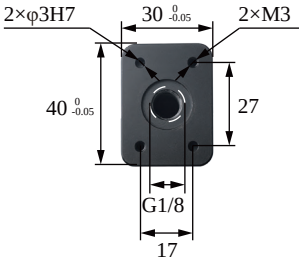

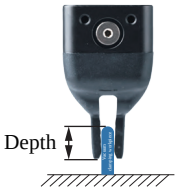







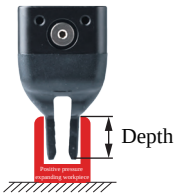

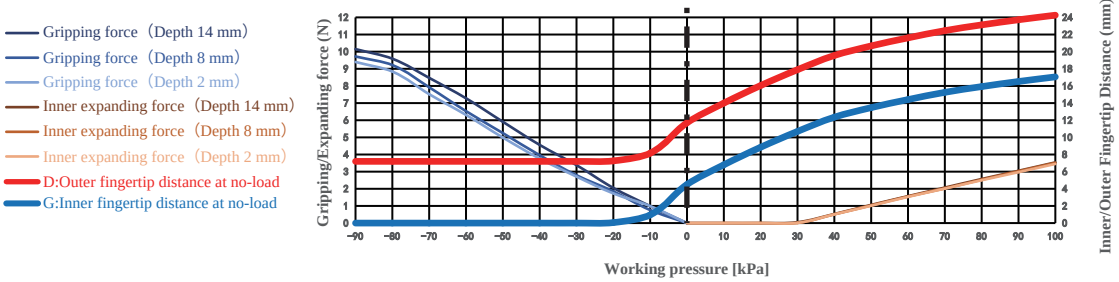

The clamping/inner-supporting force data of this product are measured based on the ideal workpiece size.
When the workpiece size deviates from the ideal value, the clamping/inner-supporting force decreases linearly.
If the workpiece size exceeds the clamping range or inner-supporting range, the clamping/inner-supporting force drops to 0.

Paremeter

Gripping range	0-5mm	Gripping force	0-10.2N	Theoretical gripping load**	0-406g	Ideal gripping workpiece size*	5mm
Internal gripping range	12-22mm	Internal gripping force	0-3.5N	Theoretical internal gripping load**	0-142g	Ideal internal gripping workpiece size*	20mm
Joint size	G1/8	Life time***	1.5 million times	Contact Temperature	<220°C	Safe pressure***	<100kPa

*: The width of the cuboid that generates the maximum gripping force (two-finger gripping), the outer diameter of the cylinder (multi-finger gripping), the width of the square hole (two-finger internal gripping), or the inner diameter of the circular hole (multi-finger internal gripping);
**: Only the theoretical load of the ideal workpiece under standard working conditions is marked for reference and comparison. The real load capacity is also affected by factors such as the surface structure and roughness of the workpiece. Please take the measured data as the standard;
***: The working air pressure and the surface roughness of the workpiece in the usage scenario may have different degrees of impact on the life-time. Please configure Rochu control Unit. Do not exceed the safe air pressure.

DAC Straight Fitting Installation

Scan to watch videos

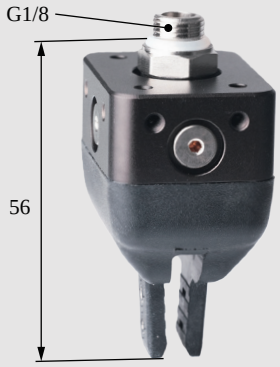

DAL Side Fitting Installation

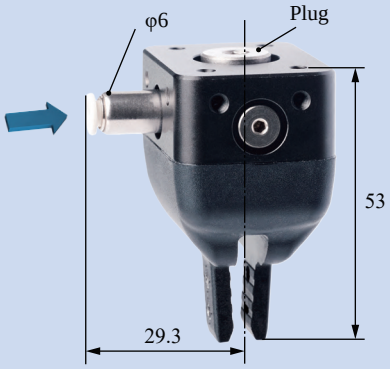

Installation of Optical Fiber Sensors

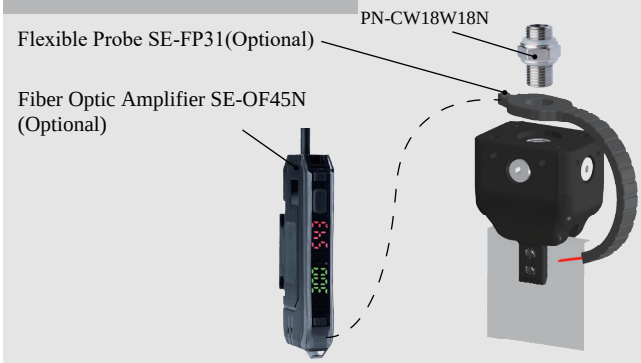

Side Access Partition Installation

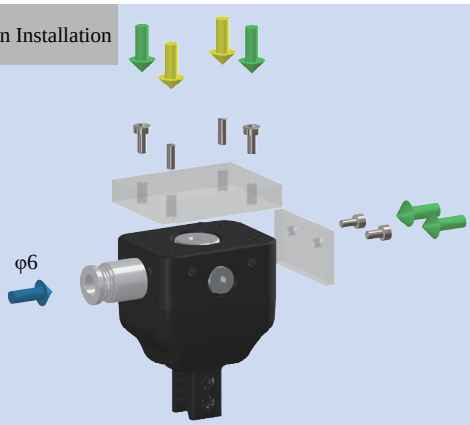

Precise Positioning Installation

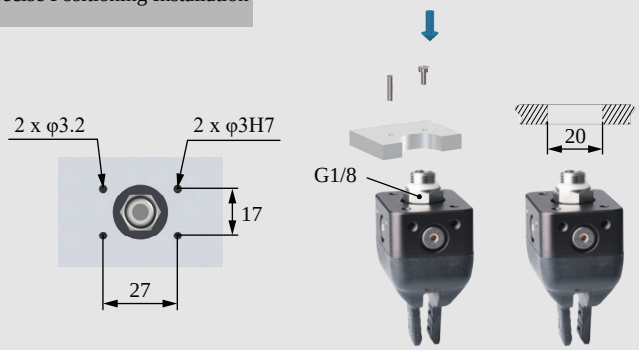

Scara Robotic Arm Installation



Matrix Installation



Rigid Connection Installation

Buffer Installation

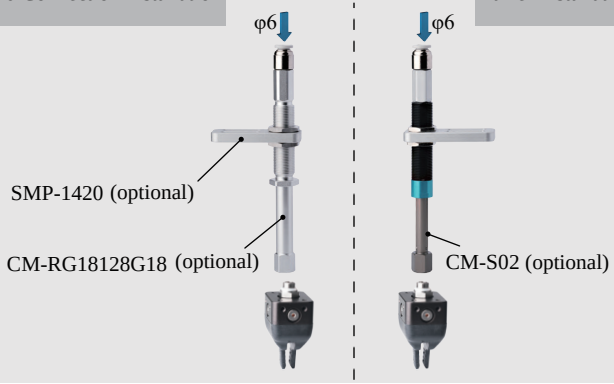

B-2TN1006[LH]/M

DAC-2G1622[H]/SN Direct-through H Type	DAS-2G1622[H]/SN Direct-through Precision Positioning H Type	DAL-2G1622[H]/SN Side-through H Type	DAM-2G1622[HS]/SN Multi-way Precision Positioning H Type
DAC-2G1622[HAS]/SN Direct-through Dust-free H Type	DAS-2G1622[HAS]/SN Direct-through Precision Positioning Dust-free H Type	DAL-2G1622[HAS]/SN Side-through Dust-free H Type	DAM-2G1622[HAS]/SN Multi-way Precision Positioning Dust-free H Type
			
Weight 23.6g	**Weight** 30.8g	**Weight** 38.1g	**Weight** 35g

Product features

- Fingertip open under pressure and clamped in a vacuum. Fingertip distance G can be adjusted by working pressure.It is suggested to be used with Rochu control unit.
- Soft beak material is divided into Normal Material [H] and Dust-free Normal Material [HAS]. When the workpiece is light, or very soft, easy to adhere to adsorp on the soft beak, Dust-free Normal Material [HAS] is preferred.
- Food-grade material, direct food contact approved.

Scan to watch videos

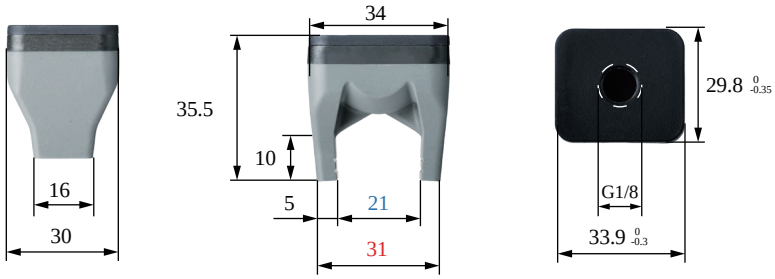

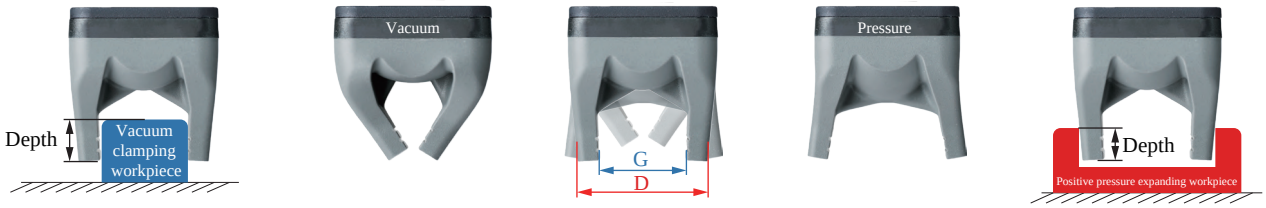

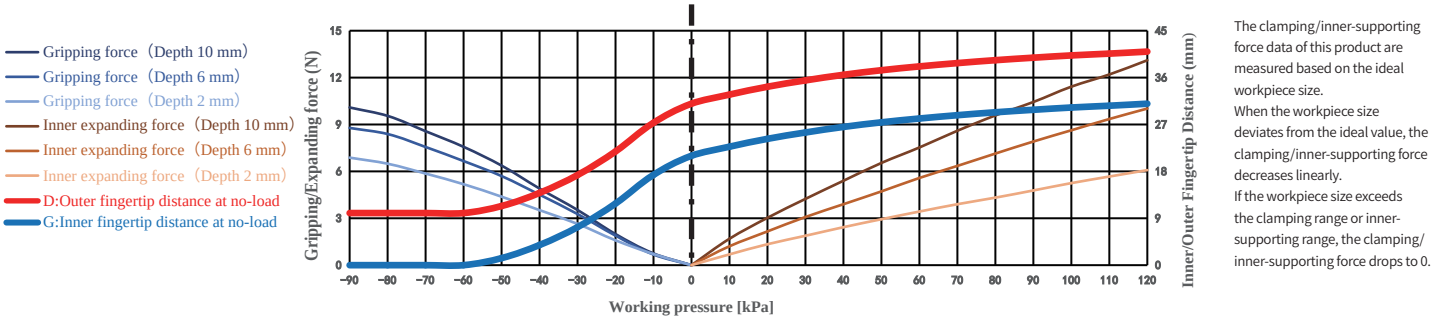

The clamping/inner-supporting force data of this product are measured based on the ideal workpiece size.
When the workpiece size deviates from the ideal value, the clamping/inner-supporting force decreases linearly.
If the workpiece size exceeds the clamping range or inner-supporting range, the clamping/inner-supporting force drops to 0.

Paremeter

Gripping range	0-25mm	Gripping force	0-10.1N	Theoretical gripping load**	0-404g	Ideal gripping workpiece size*	21.0mm
Internal gripping range	30-40mm	Internal gripping force	0-13.1N	Theoretical internal gripping load**	0-524g	Ideal internal gripping workpiece size*	32mm
Joint size	G1/8	Life time***	1.5 million times	Contact Temperature	<220℃	Safe pressure***	<120kPa

*: The width of the cuboid that generates the maximum gripping force (two-finger gripping), the outer diameter of the cylinder (multi-finger gripping), the width of the square hole (two-finger internal gripping), or the inner diameter of the circular hole (multi-finger internal gripping);
**: Only the theoretical load of the ideal workpiece under standard working conditions is marked for reference and comparison. The real load capacity is also affected by factors such as the surface structure and roughness of the workpiece. Please take the measured data as the standard;
***: The working air pressure and the surface roughness of the workpiece in the usage scenario may have different degrees of impact on the life-time. Please configure Rochu control Unit. Do not exceed the safe air pressure.

DAC Module
(Direct-through)



DAS Module
(Precise Positioning Direct-through)

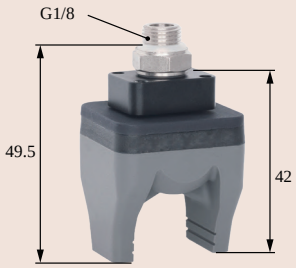

DAL Module
(Side-through)

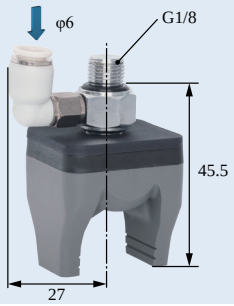

DAM Module
(Precise Positioning Multiple-through)

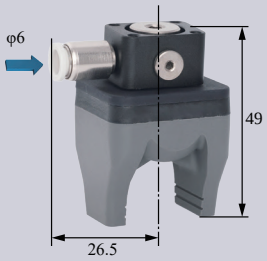

DAC
Rigid Connection Installation

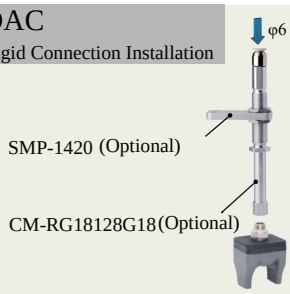

DAC
Buffer Installation

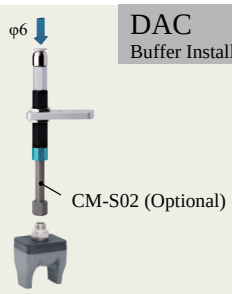

DAS
Matrix Installation

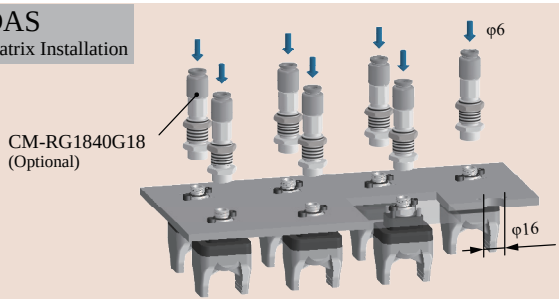

DAC Scara Scara Robot Arm Installation

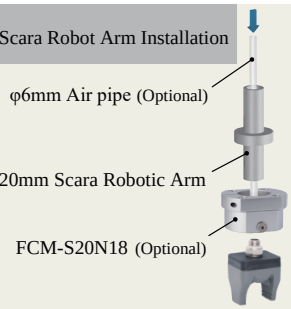

DAL
Robot Arm Flange Side-through Installation

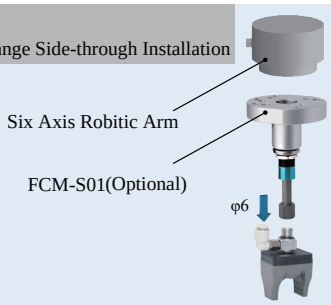

DAS Detection

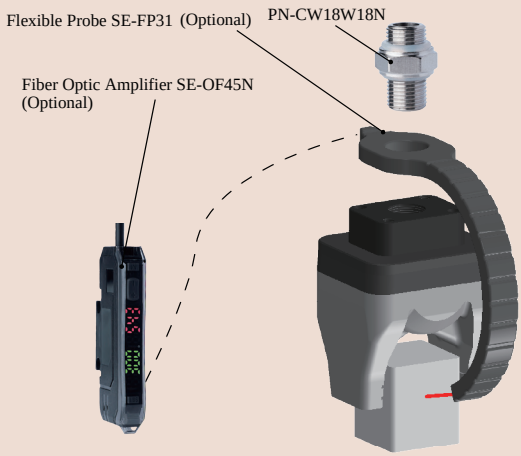

DAM Precise Positioning + Detection

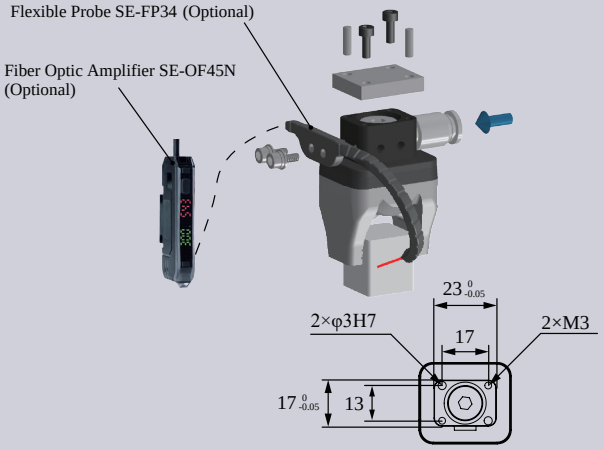

DAS Precise Positioning and Direct-through Installation

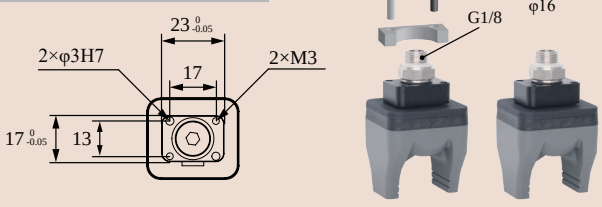

B-2G1622[H]/SN



DAC-2G1624[HB]/S Direct-through HB Type		DAL-2G1624[HB]/S Side-through HB Type	
DAC-2G1624[HBAS]/S Direct-through Dust-free HB Type		DAL-2G1624[HBAS]/S Side-through Dust-free HB Type	
Weight	25.9g	**Weight**	38.1g



Product features

- Fingertip open under pressure and clamped in a vacuum. Fingertip distance G can be adjusted by working pressure.It is suggested to be used with Rochu control unit.
- Soft beak material is divided into Strengthen Material [HB] and Dust-free Strengthen Material [HBAS]. When the workpiece is light, or very soft, easy to adhere to adsorp on the soft beak, Dust-free Strengthen Material [HBAS] is preferred.

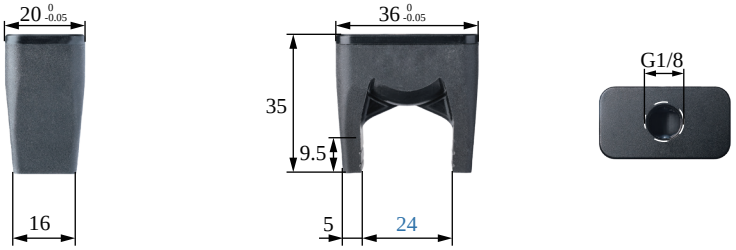

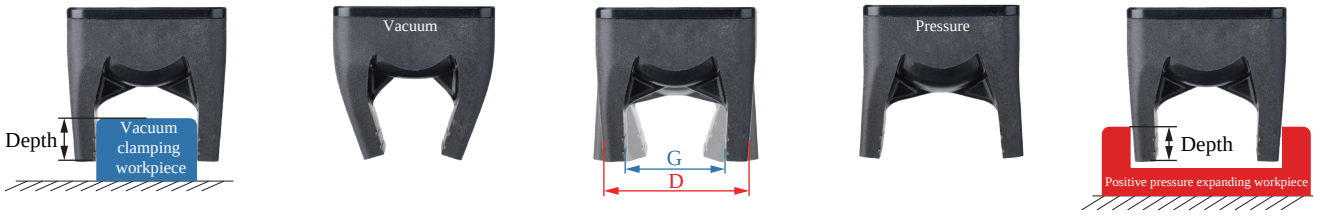

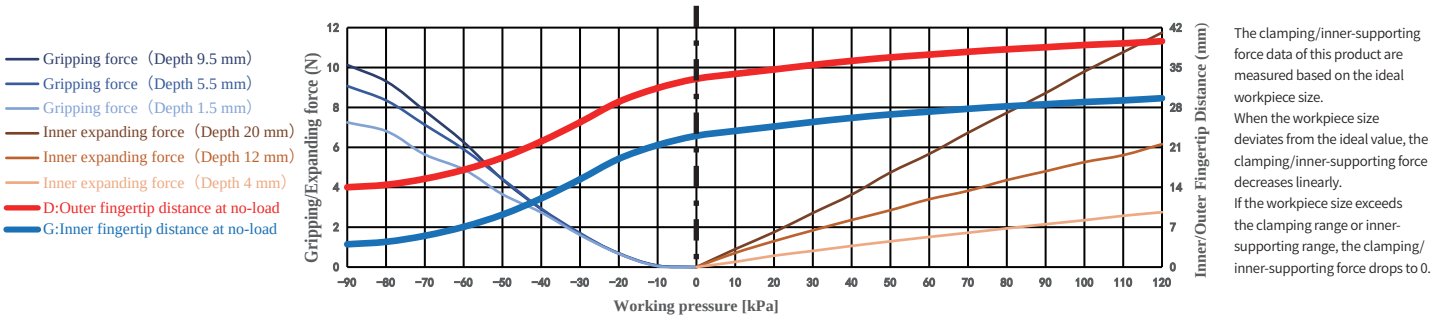

The clamping/inner-supporting force data of this product are measured based on the ideal workpiece size.
When the workpiece size deviates from the ideal value, the clamping/inner-supporting force decreases linearly.
If the workpiece size exceeds the clamping range or inner-supporting range, the clamping/inner-supporting force drops to 0.

Paremeter

Gripping range	8-24mm	Gripping force	0-10.1N	Theoretical gripping load**	0-405g	Ideal gripping workpiece size*	24mm
Internal gripping range	34-38mm	Internal gripping force	0-11.8N	Theoretical internal gripping load**	0-470g	Ideal internal gripping workpiece size*	35mm
Joint size	G1/8	Life time***	1.5 million times	Contact Temperature	<220℃	Safe pressure***	<120kPa

*: The width of the cuboid that generates the maximum gripping force (two-finger gripping), the outer diameter of the cylinder (multi-finger gripping), the width of the square hole (two-finger internal gripping), or the inner diameter of the circular hole (multi-finger internal gripping);
**: Only the theoretical load of the ideal workpiece under standard working conditions is marked for reference and comparison. The real load capacity is also affected by factors such as the surface structure and roughness of the workpiece. Please take the measured data as the standard;
***: The working air pressure and the surface roughness of the workpiece in the usage scenario may have different degrees of impact on the life-time. Please configure Rochu control Unit. Do not exceed the safe air pressure.

DAC Straight Fitting Installation

Scan to watch videos

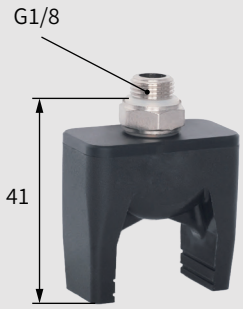

DAL Side Fitting Installation

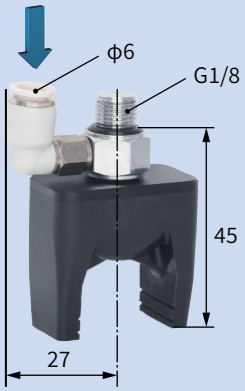

Scara Robotic Arm Installation

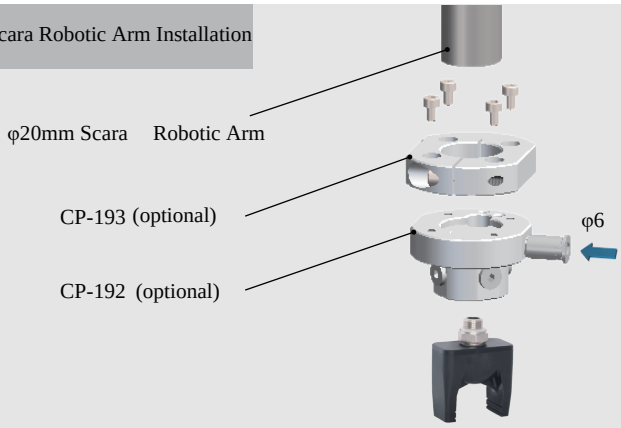

Robotic Arm Flange Side Fitting Installation

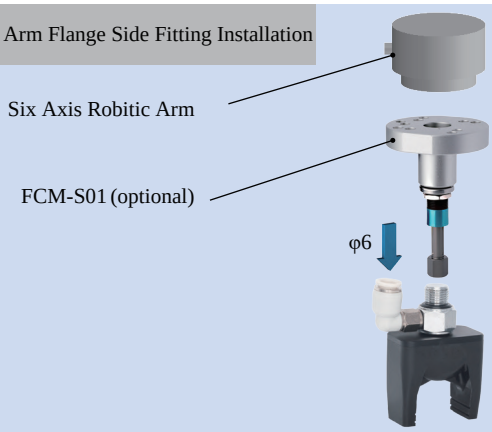

Rigid Connection Installation

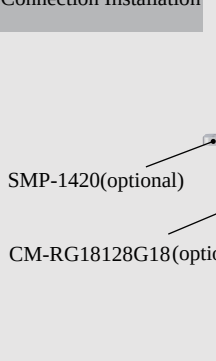

Buffer Installation



Matrix Installation



Precise Positioning Installation

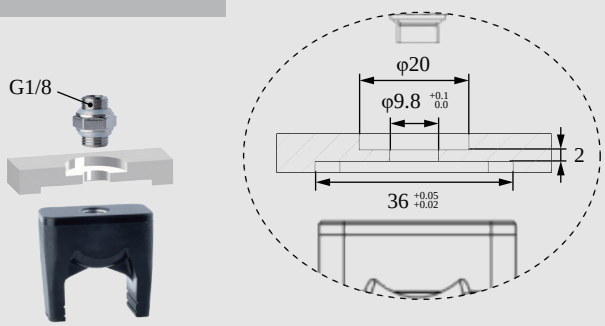

Installation of Optical Fiber Sensors





DAC-2G1624[LH]/S Direct-through Anti-static H Type	DAL-2G1624[LH]/S Side-through Anti-static H Type
DAC-2G1624[LH]/S Direct-through Anti-static Dust-free H Type	DAL-2G1624[LH]/S Side-through Anti-static Dust-free H Type
Weight 25.9g	**Weight** 38.1g



Product features

- Fingertips open under pressure state and clamp in a vacuum. Inner fingertips distance G can be adjusted by working pressure.It is suggested to be used with Rochu control unit.
- The Anti-static material meets the requirements of the national standard GB/T11210-2014, with a point-to-point resistance of 0.1-1000MΩ. The Anti-static Dust-free type [LHAS] is more suitable for dealing with workpieces that have dustproof requirements or are miniature and lightweight.

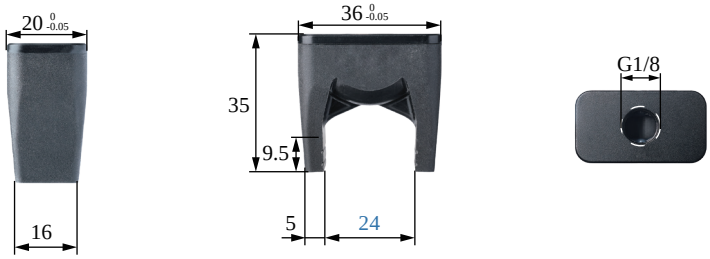

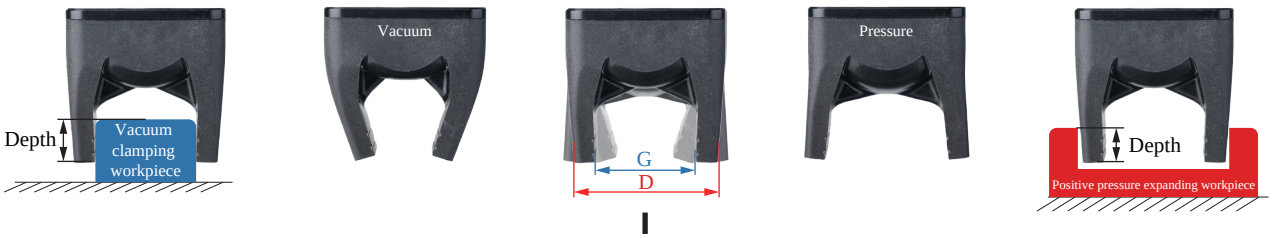

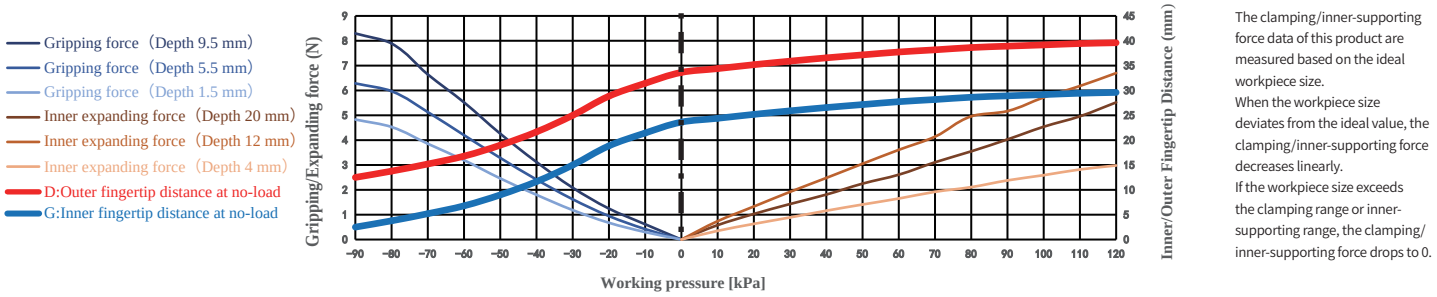

The clamping/inner-supporting force data of this product are measured based on the ideal workpiece size.
When the workpiece size deviates from the ideal value, the clamping/inner-supporting force decreases linearly.
If the workpiece size exceeds the clamping range or inner-supporting range, the clamping/inner-supporting force drops to 0.

Paremeter

Gripping range	8-24mm	Gripping force	0-8.3N	Theoretical gripping load**	0-332g	Ideal gripping workpiece size*	24mm
Internal gripping range	34-38mm	Internal gripping force	0-7.4N	Theoretical internal gripping load**	0-294g	Ideal internal gripping workpiece size*	35mm
Joint size	G1/8	Life time***	1.5 million times	Contact Temperature	<220°C	Safe pressure***	<120kPa

*: The width of the cuboid that generates the maximum gripping force (two-finger gripping), the outer diameter of the cylinder (multi-finger gripping), the width of the square hole (two-finger internal gripping), or the inner diameter of the circular hole (multi-finger internal gripping);
**: Only the theoretical load of the ideal workpiece under standard working conditions is marked for reference and comparison. The real load capacity is also affected by factors such as the surface structure and roughness of the workpiece. Please take the measured data as the standard;
***: The working air pressure and the surface roughness of the workpiece in the usage scenario may have different degrees of impact on the life-time. Please configure Rochu control Unit. Do not exceed the safe air pressure.

DAC Straight Fitting Installation

Scan to watch videos



DAL Side Fitting Installation

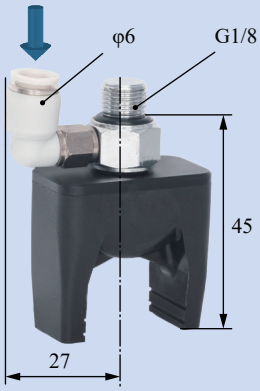

Scara Robotic Arm Installation



Robotic Arm Flange Side Fitting Installation

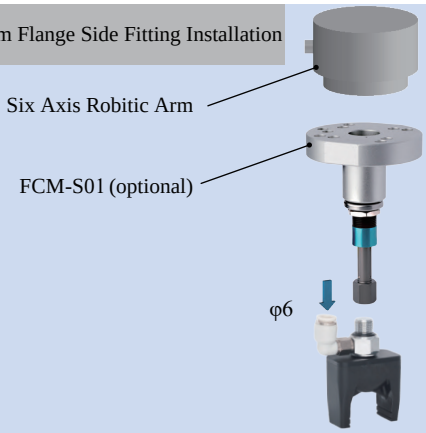

Rigid Connection Installation

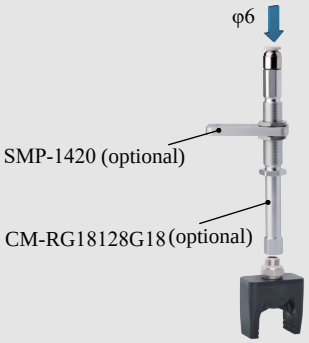

Buffer Installation



Matrix Installation

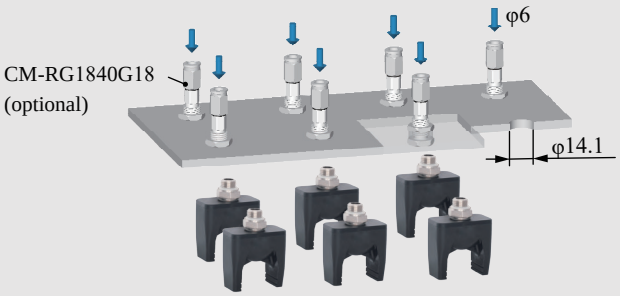

Precise Positioning Installation

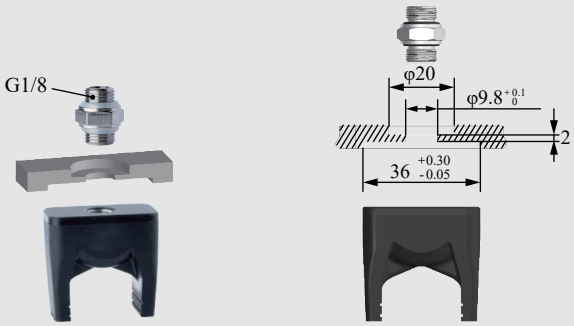

Installation of Optical Fiber Sensors

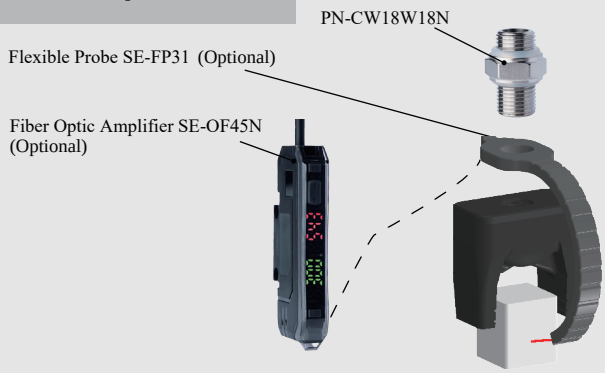

DAC-2G2227[H]/SN Direct-through H Type	DAS-2G2227[H]/SN Direct-through Precision Positioning H Type	DAL-2G2227[H]/SN Side-through H Type	DAM-2G2227[H]/SN Multi-way Precision Positioning H Type
DAC-2G2227[HAS]/SN Direct-through Dust-free H Type	DAS-2G2227[HAS]/SN Direct-through Precision Positioning Dust-free H Type	DAL-2G2227[HAS]/SN Side-through Dust-free H Type	DAM-2G2227[HAS]/SN Multi-way Precision Positioning Dust-free H Type
			
Weight 25.2g	**Weight** 32.4g	**Weight** 38.6g	**Weight** 36.6g

Product features

- Fingertip open under pressure and clamped in a vacuum. Fingertip distance G can be adjusted by working pressure.It is suggested to be used with Rochu control unit.
- Soft beak material is divided into Normal Material [H] and Dust-free Normal Material [HAS]. When the workpiece is light, or very soft, easy to adhere to adsorp on the soft beak, Dust-free Normal Material [HAS] is preferred.
- Food-grade material, direct food contact approved.

Scan to watch videos

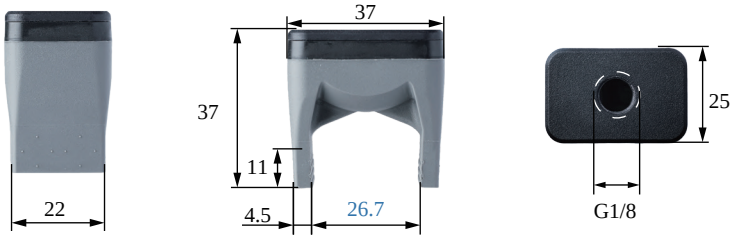

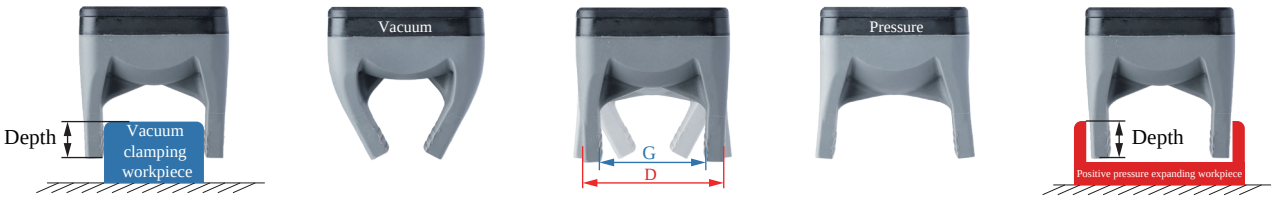

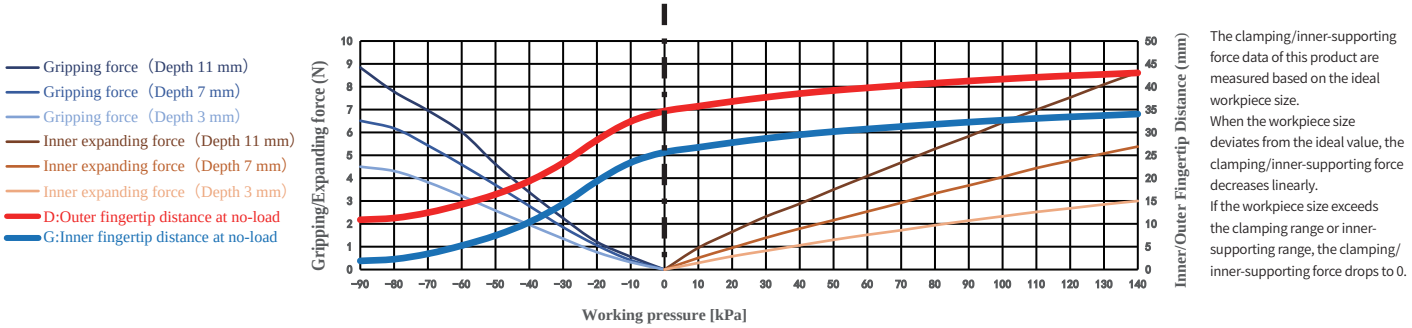

The clamping/inner-supporting force data of this product are measured based on the ideal workpiece size.
When the workpiece size deviates from the ideal value, the clamping/inner-supporting force decreases linearly.
If the workpiece size exceeds the clamping range or inner-supporting range, the clamping/inner-supporting force drops to 0.

Paremeter

Gripping range	3-30mm	Gripping force	0-8.8N	Theoretical gripping load**	0-354g	Ideal gripping workpiece size*	25.5mm
Internal gripping range	35-42mm	Internal gripping force	0-8.6N	Theoretical internal gripping load**	0-345g	Ideal internal gripping workpiece size*	36mm
Joint size	G1/8	Life time***	1.5 million times	Contact Temperature	<220℃	Safe pressure***	<140kPa

*: The width of the cuboid that generates the maximum gripping force (two-finger gripping), the outer diameter of the cylinder (multi-finger gripping), the width of the square hole (two-finger internal gripping), or the inner diameter of the circular hole (multi-finger internal gripping);
**: Only the theoretical load of the ideal workpiece under standard working conditions is marked for reference and comparison. The real load capacity is also affected by factors such as the surface structure and roughness of the workpiece. Please take the measured data as the standard;
***: The working air pressure and the surface roughness of the workpiece in the usage scenario may have different degrees of impact on the life-time. Please configure Rochu control Unit. Do not exceed the safe air pressure.

DAC Module
(Direct-through)

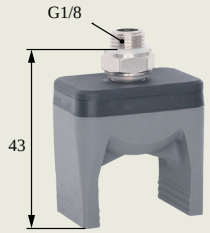

DAS Module
(Precise Positioning Direct-through)

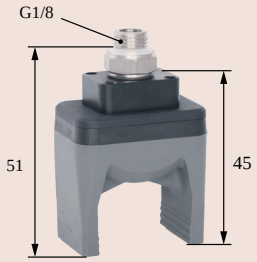

DAL Module
(Side-through)



DAM Module
(Precise Positioning Multiple-through)

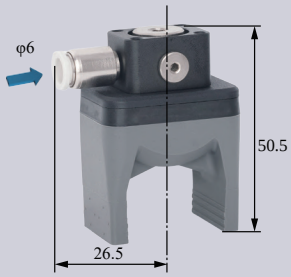

DAC
Rigid Connection Installation

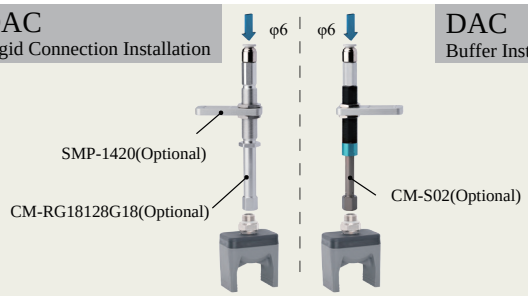

DAC
Buffer Installation

DAS
Matrix Installation

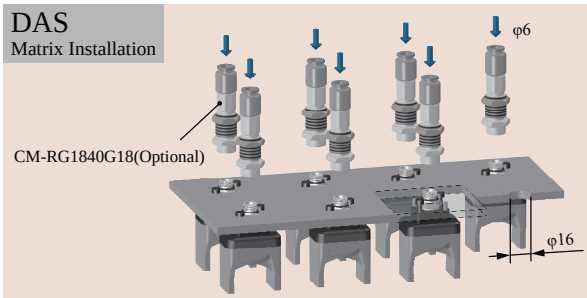

DAC Scara Robot Arm Installation

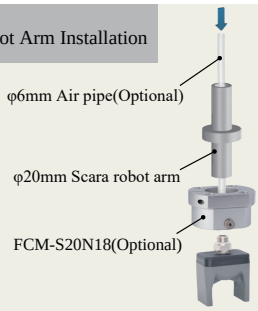

DAL
Robot Arm Flange Side-through Installation

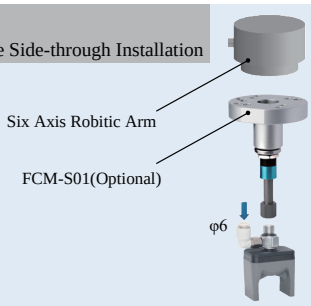

DAS Detection

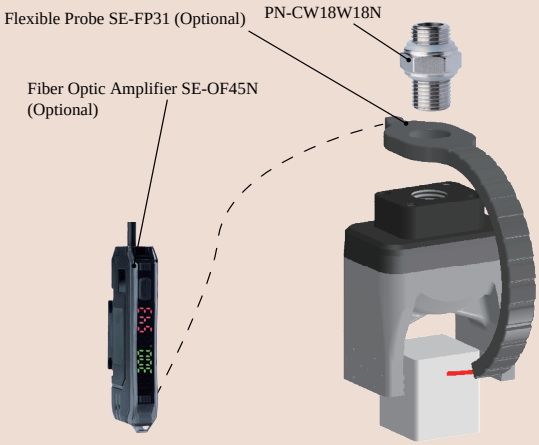

DAM Precise Positioning + Detection

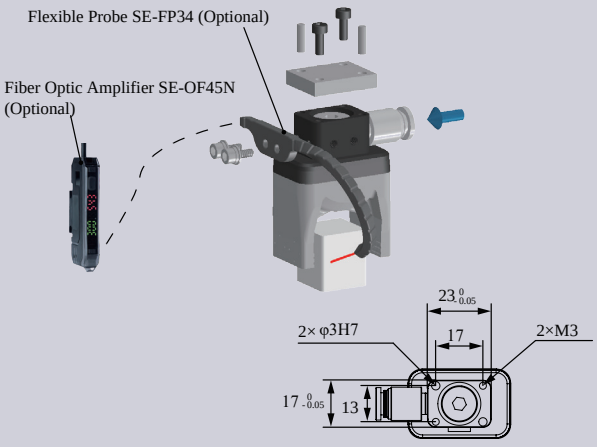

DAS Precise Positioning &
Direct-through Installation

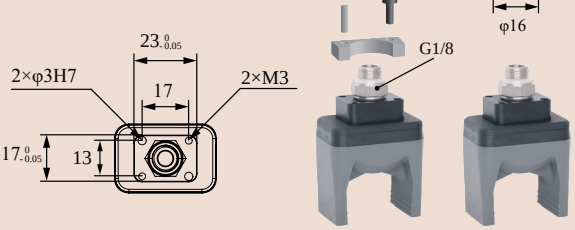

DAC-2G2227[LH]/SN Direct-through Anti-static H Type	DAS-2G2227[LH]/SN Direct-through Anti-static Precision Positioning H Type	DAL-2G2227[LH]/SN Side-through Anti-static H Type	DAM-2G2227[LH]/SN Multi-way Anti-static Precision Positioning H Type
DAC-2G2227[LHAS]/SN Direct-through Anti-static Dust-free H Type	DAS-2G2227[LHAS]/SN Direct-through Anti-static Dust-free Precision Positioning H Type	DAL-2G2227[LHAS]/SN Side-through Anti-static Dust-free H Type	DAM-2G2227[LHAS]/SN Side-through Anti-static Dust-free Precision Positioning H Type
			
Weight 23.6g	**Weight** 30.8g	**Weight** 37g	**Weight** 35g

Product features

- Fingertips open under pressure state and clamp in a vacuum. Inner fingertips distance G and outer fingertips distance D can be adjusted by working pressure.It is suggested to be used with Rochu control unit.
- The Anti-static material meets the requirements of the national standard GB/T11210-2014, with a point-to-point resistance of 0.1-1000MΩ. The Anti-static Dust-free type [LHAS] is more suitable for dealing with workpieces that have dustproof requirements or are miniature and lightweight.

Scan to watch videos

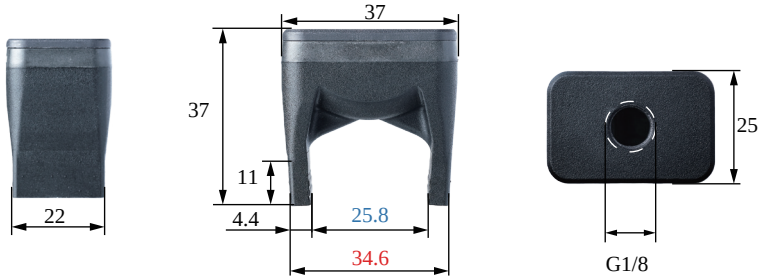

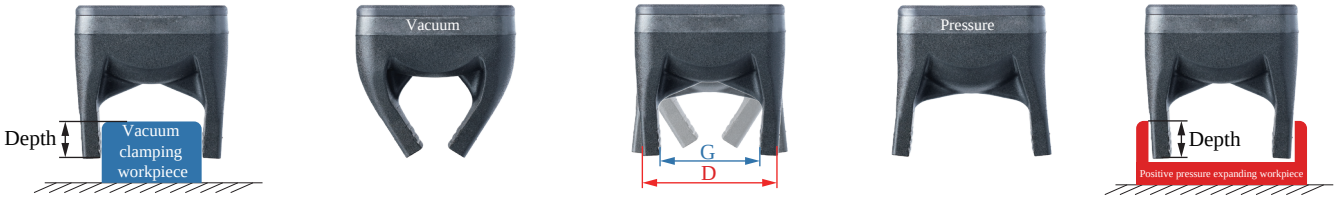

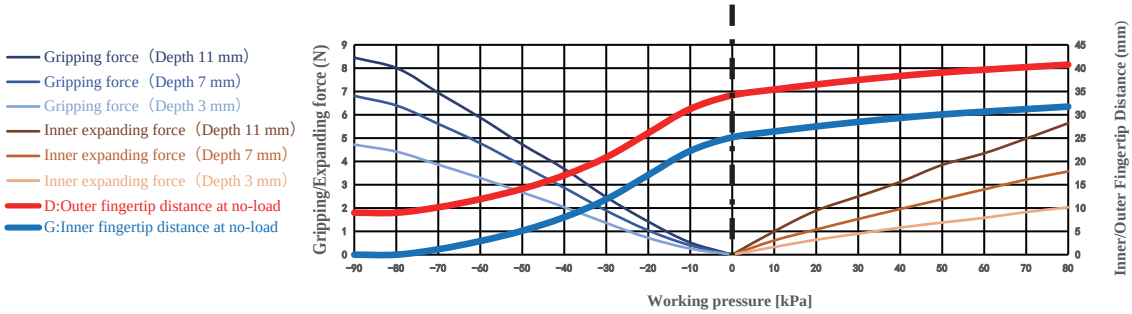

The clamping/inner-supporting force data of this product are measured based on the ideal workpiece size.
When the workpiece size deviates from the ideal value, the clamping/inner-supporting force decreases linearly.
If the workpiece size exceeds the clamping range or inner-supporting range, the clamping/inner-supporting force drops to 0.

Paremeter

Gripping range	3-30mm	Gripping force	0-8.5N	Theoretical gripping load**	0-338g	Ideal gripping workpiece size*	25.5mm
Internal gripping range	35-42mm	Internal gripping force	0-5.6N	Theoretical internal gripping load**	0-226g	Ideal internal gripping workpiece size*	36mm
Joint size	G1/8	Life time***	1.5 million times	Contact Temperature	<220℃	Safe pressure***	<80kPa

*: The width of the cuboid that generates the maximum gripping force (two-finger gripping), the outer diameter of the cylinder (multi-finger gripping), the width of the square hole (two-finger internal gripping), or the inner diameter of the circular hole (multi-finger internal gripping);
**: Only the theoretical load of the ideal workpiece under standard working conditions is marked for reference and comparison. The real load capacity is also affected by factors such as the surface structure and roughness of the workpiece. Please take the measured data as the standard;
***: The working air pressure and the surface roughness of the workpiece in the usage scenario may have different degrees of impact on the life-time. Please configure Rochu control Unit. Do not exceed the safe air pressure.

DACModule
(Direct-through)

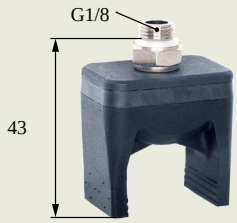

DASModule
(Precise Positioning Direct-through)

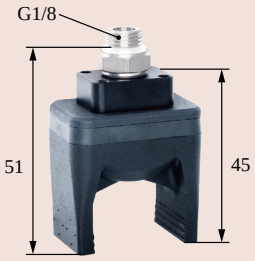

DALModule
(Side-through)

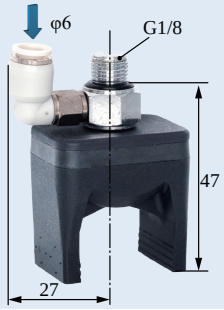

DAMModule
(Precise Positioning Multiple-through)

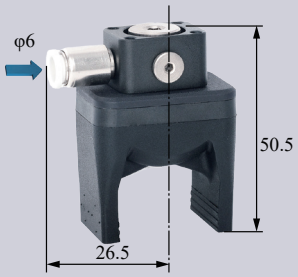

DAC
Rigid Connection Installation

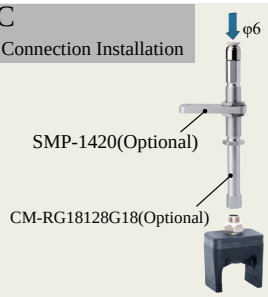

DAC
Buffer Installation

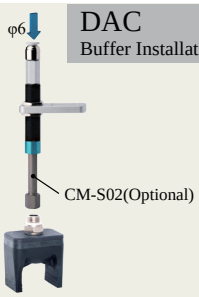

DAS
Matrix Installation

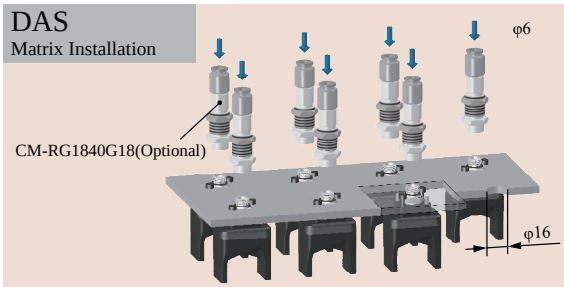

DAC Scara Scara Robot Arm Installation

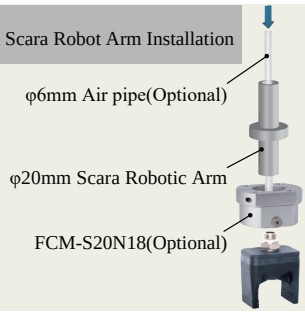

DAL
Robot Arm Flange Side-through Installation

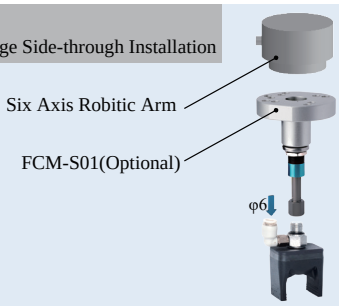

DAS Detection

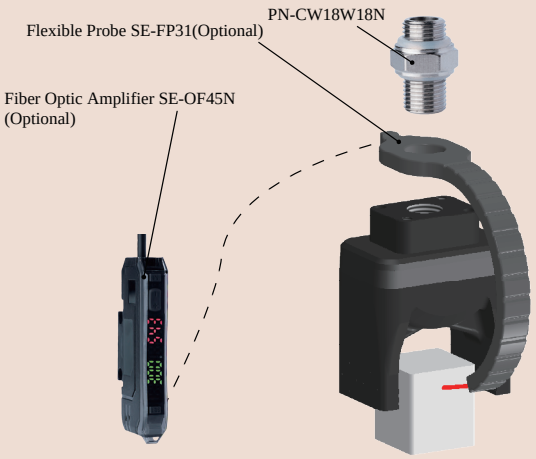

DAM Precise Positioning + Detection

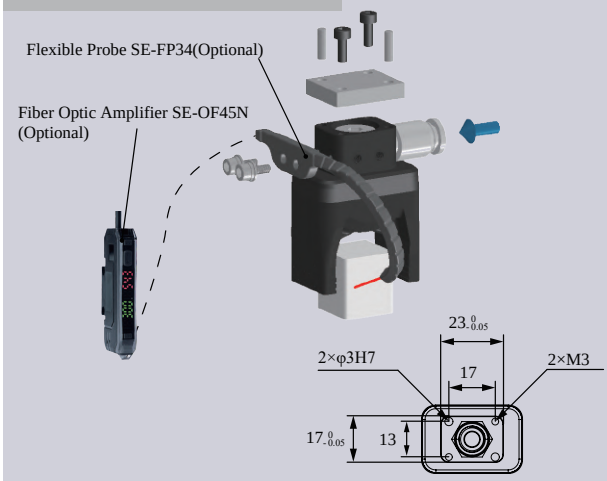

DAS Precise Positioning and Direct-through Installation

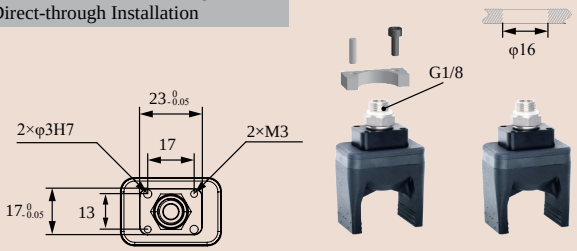

B-2G2227[LH]/SN

DAC-2GN2227[H]/SN Direct-through H Type	DAS-2GN2227[H]/SN Direct-through Precision Positioning H Type	DAL-2GN2227[H]/SN Side-through H Type	DAM-2GN2227[H]/SN Multi-way Precision Positioning H Type
DAC-2GN2227[HAS]/SN Direct-through Dust-free H Type	DAS-2GN2227[HAS]/SN Direct-through Precision Positioning Dust-free H Type	DAL-2GN2227[HAS]/SN Side-through Dust-free H Type	DAM-2GN2227[HAS]/SN Multi-way Precision Positioning Dust-free H Type
			
Weight 25.2g	Weight 32.4g	Weight 38.6g	Weight 36.6g

- Suitable for complex-shaped workpieces. Profiling nails, designed to fit the workpiece's shape, are installed via soft grippers' fingertip screw holes. They can be made of rigid materials like plastic or metal, depending on the workpiece.
- Fingertips open under pressure state and clamp in a vacuum. Inner fingertips distance G can be adjusted by working pressure.It is suggested to be used with Rochu control unit.
- When soft grippers contact workpieces,especially those with dust-prevention needs,or miniature,lightweight and easily-adsorbable ones,choose dust-free material [HAS] preferentially.

Scan to watch videos

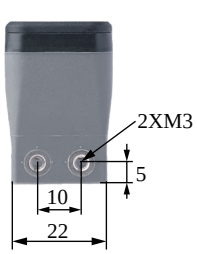

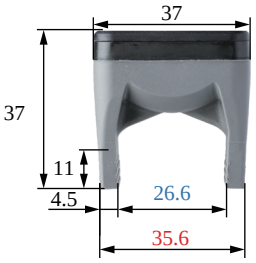

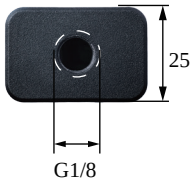



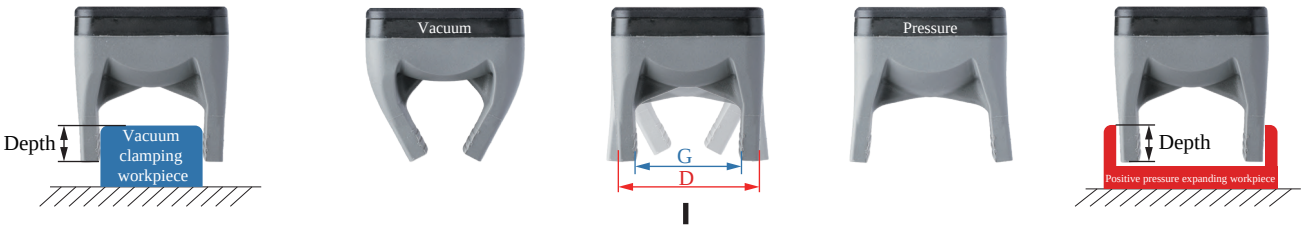

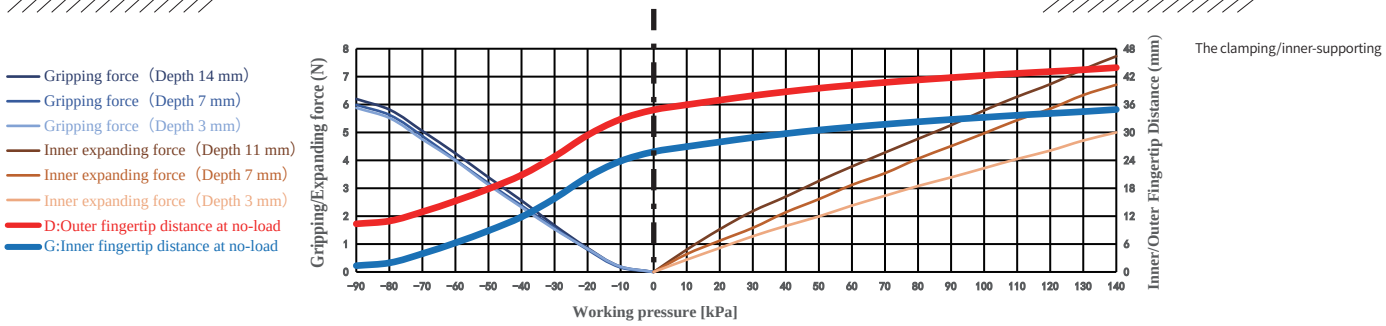

Gripping range	3-30mm	Gripping force	0-6.2N	Theoretical gripping load**	0-248g	Ideal gripping workpiece size*	25.5mm
Internal gripping range	35-42mm	Internal gripping force	0-7.7N	Theoretical internal gripping load**	0-309g	Ideal internal gripping workpiece size*	36mm
Joint size	G1/8	Life time***	1.5 million times	Contact Temperature	<220℃	Safe pressure***	<140kPa

DACModule
(Direct-through)

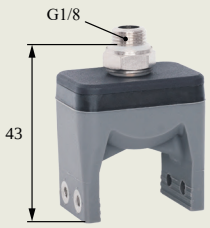

DASModule
(Precise Positioning Direct-through)

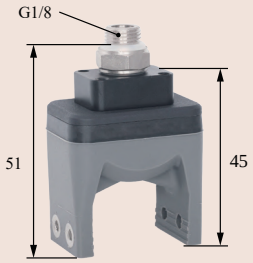

DALModule
(Side-through)



DAMModule
(Precise Positioning Multiple-through)

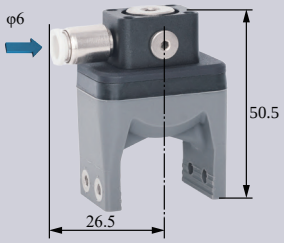

DAC
Rigid Connection Installation

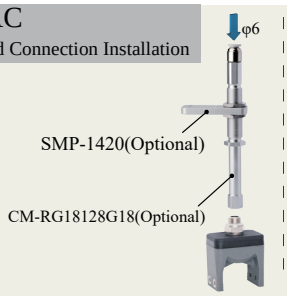

DAC
Buffer Installation

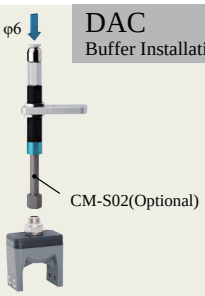

DAS
Matrix Installation

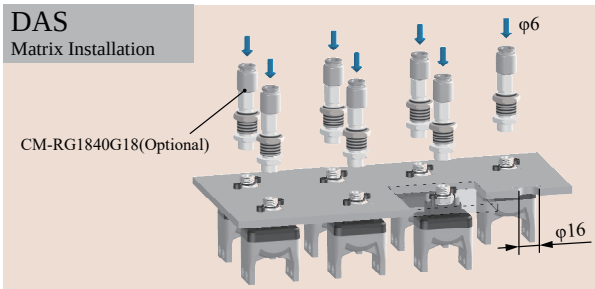

DAC Scara Scara Robot Arm Installation

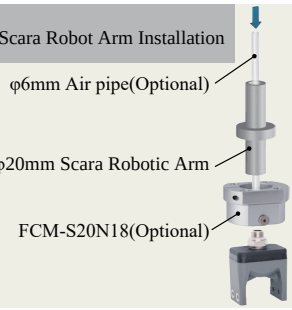

DAS Precise Positioning and Direct-through Installation

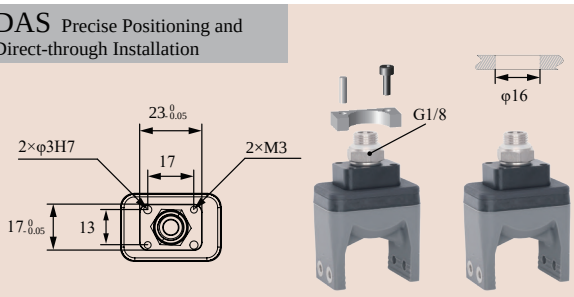

DAS Detection + Profile Block Installation

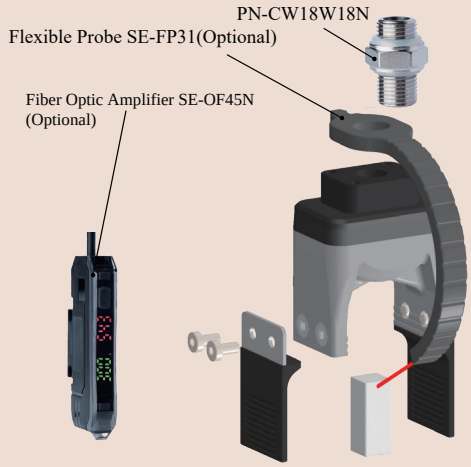

DAM Precise Positioning + Detection + Profile Block Installation

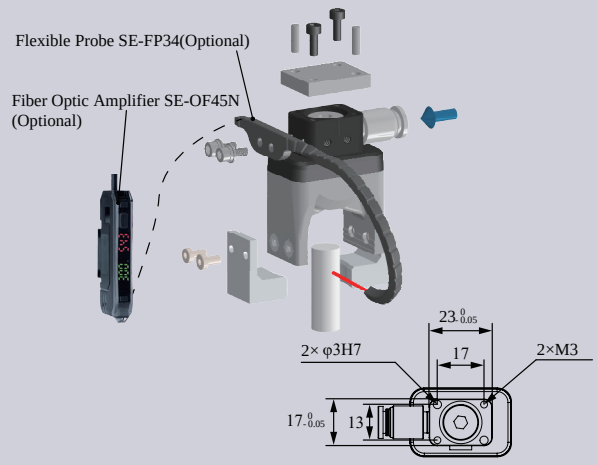

DAL
Robot Arm Flange Side-through Installation

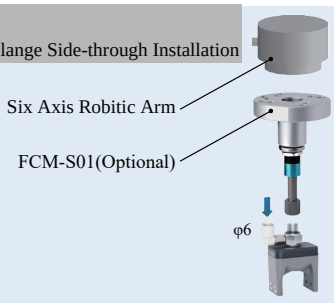

DAC-2G2232[H]/SN Direct-through H Type	DAS-2G2232[H]/SN Direct-through Precision Positioning H Type	DAL-2G2232[H]/SN Side-through H Type	DAM-2G2232[H]/SN Multi-way Precision Positioning H Type
DAC-2G2232[HAS]/SN Direct-through Dust-free H Type	DAS-2G2232[HAS]/SN Direct-through Precision Positioning Dust-free H Type	DAL-2G2232[HAS]/SN Side-through Dust-free H Type	DAM-2G2232[HAS]/SN Multi-way Precision Positioning Dust-free H Type
			
Weight 26.5g	**Weight** 33.7g	**Weight** 39.9g	**Weight** 37.9g

Product features

- Fingertip open under pressure and clamped in a vacuum. Fingertip distance G can be adjusted by working pressure.It is suggested to be used with Rochu control unit.
- Soft beak material is divided into Normal Material [H] and Dust-free Normal Material [HAS]. When the workpiece is light, or very soft, easy to adhere to adsorp on the soft beak, Dust-free Normal Material [HAS] is preferred.
- Food-grade material, direct food contact approved.

Scan to watch videos

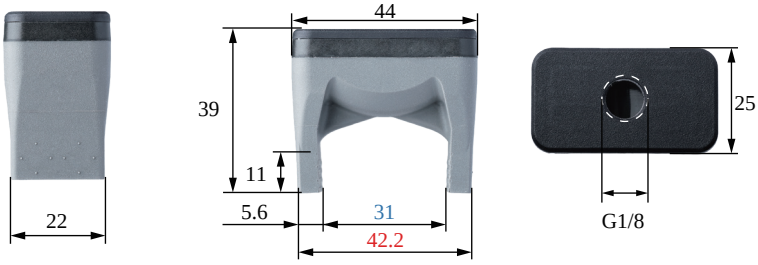

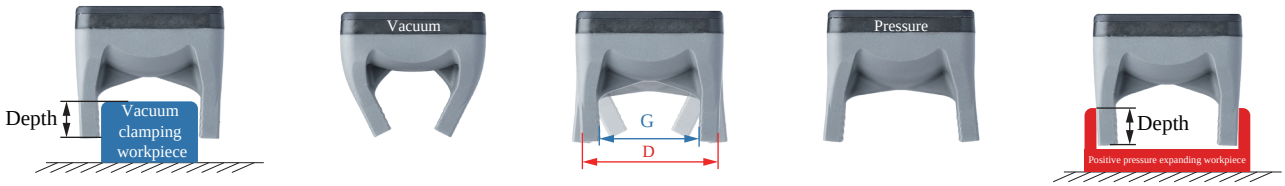

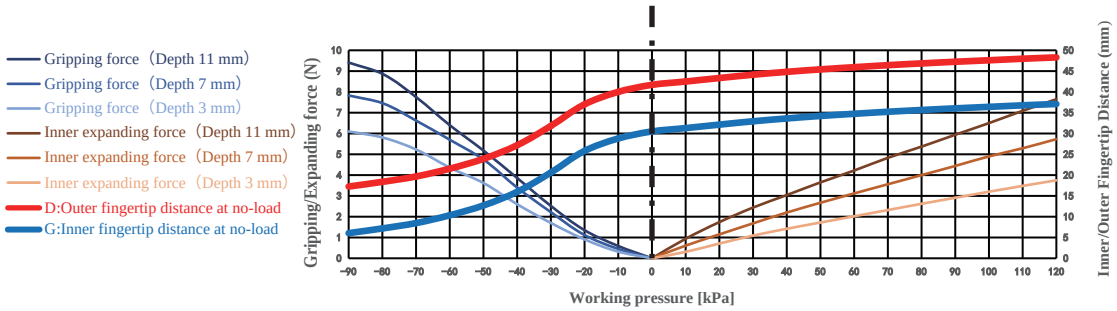

The clamping/inner-supporting force data of this product are measured based on the ideal workpiece size.
When the workpiece size deviates from the ideal value, the clamping/inner-supporting force decreases linearly.
If the workpiece size exceeds the clamping range or inner-supporting range, the clamping/inner-supporting force drops to 0.

Paremeter

Gripping range	20-35.5mm	Gripping force	0-9.4N	Theoretical gripping load**	0-376g	Ideal gripping workpiece size*	31.0mm
Internal gripping range	40-45mm	Internal gripping force	0-7.7N	Theoretical internal gripping load**	0-306g	Ideal internal gripping workpiece size*	43mm
Joint size	G1/8	Life time***	1.5 million times	Contact Temperature	＜220°C	Safe pressure***	<120kPa

*: The width of the cuboid that generates the maximum gripping force (two-finger gripping), the outer diameter of the cylinder (multi-finger gripping), the width of the square hole (two-finger internal gripping), or the inner diameter of the circular hole (multi-finger internal gripping);
**: Only the theoretical load of the ideal workpiece under standard working conditions is marked for reference and comparison. The real load capacity is also affected by factors such as the surface structure and roughness of the workpiece. Please take the measured data as the standard;
***: The working air pressure and the surface roughness of the workpiece in the usage scenario may have different degrees of impact on the life-time. Please configure Rochu control Unit. Do not exceed the safe air pressure.

DACModule
(Direct-through)

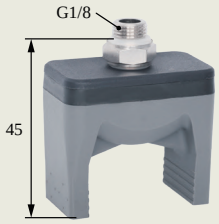

DASModule
(Precise Positioning Direct-through)

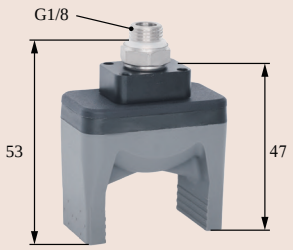

DALModule
(Side-through)

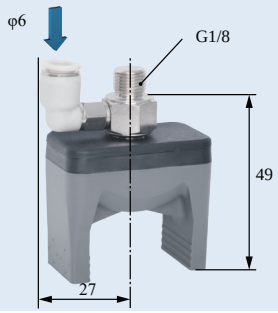

DAMModule
(Precise Positioning Multiple-through)

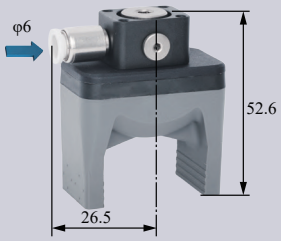

DAC
Rigid Connection Installation

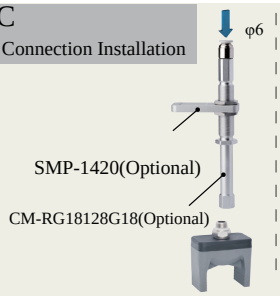

DAC
Buffer Installation

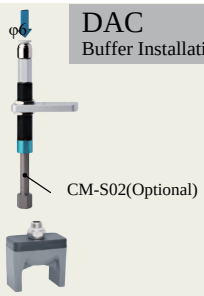

DAS
Matrix Installation

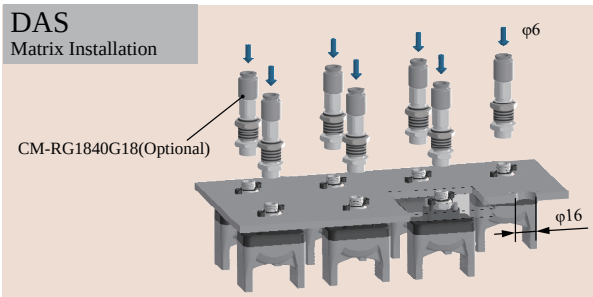

DAC Scara Scara Robot Arm Installation

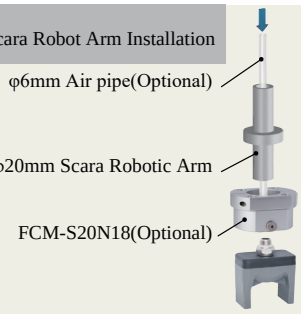

DAL
Robot Arm Flange Side-through Installation

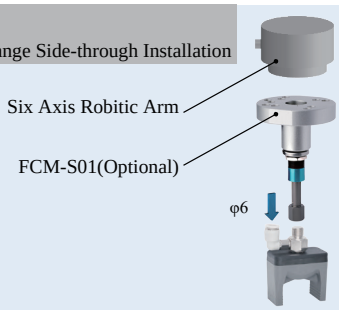

DAS Detection

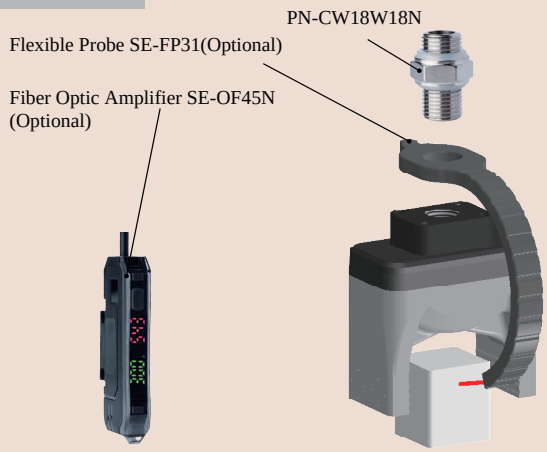

DAM Precise Positioning + Detection

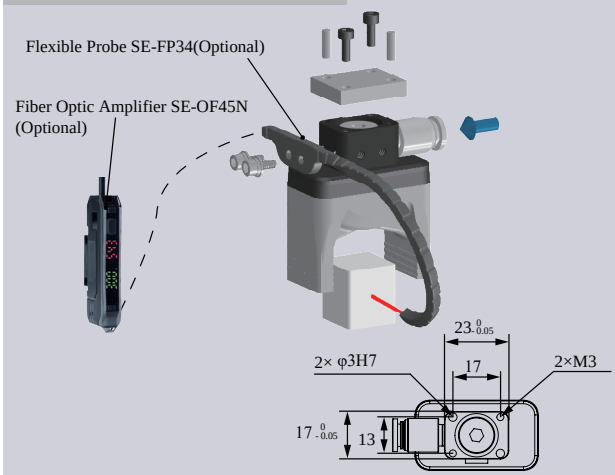

DAS Precise Positioning and Direct-through Installation

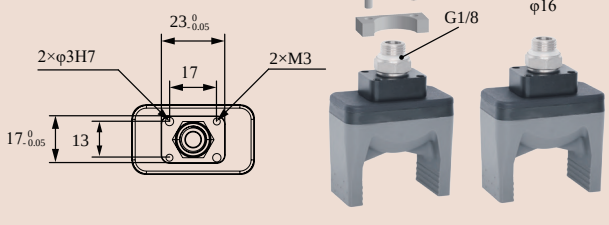

B-2G2232[H]/SN

DAC-2GN2232[H]/SN Direct-through H Type	DAS-2GN2232[H]/SN Direct-through Precision Positioning H Type	DAL-2GN2232[H]/SN Side-through H Type	DAM-2GN2232[HS]/SN Multi-way Precision Positioning H Type
DAC-2GN2232[HAS]/SN Direct-through Dust-free H Type	DAS-2GN2232[HAS]/SN Direct-through Precision Positioning Dust-free H Type	DAL-2GN2232[HAS]/SN Side-through Dust-free H Type	DAM-2GN2232[HAS]/SN Multi-way Precision Positioning Dust-free H Type
			
Weight 28.8g	**Weight** 36g	**Weight** 42.2g	**Weight** 40.2g

Product features

- Suitable for complex-shaped workpieces. Profiling nails, designed to fit the workpiece's shape, are installed via soft grippers' fingertip screw holes. They can be made of rigid materials like plastic or metal, depending on the workpiece.
- Fingertips open under pressure state and clamp in a vacuum. Inner fingertips distance G can be adjusted by working pressure.It is suggested to be used with Rochu control unit.
- When soft grippers contact workpieces,especially those with dust-prevention needs,or miniature,lightweight and easily-adsorbable ones,choose dust-free material [HAS] preferentially.

Scan to watch videos



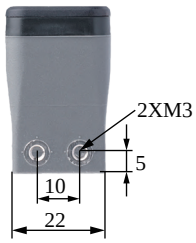

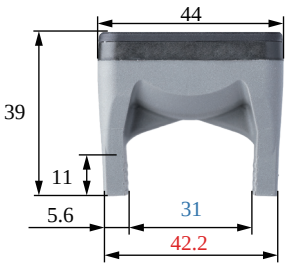

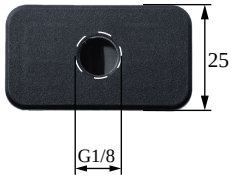

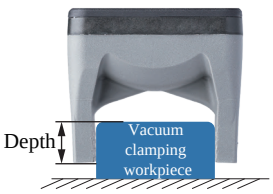



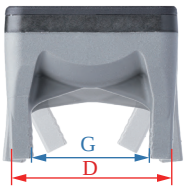





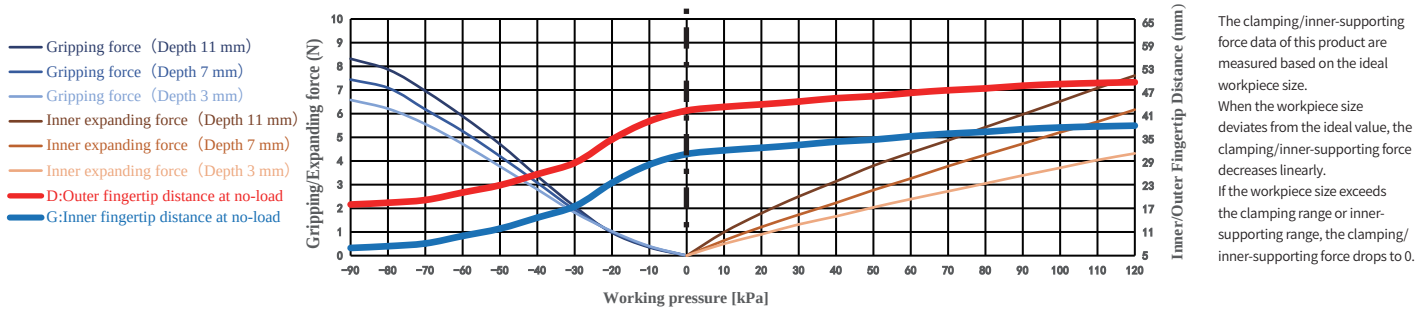

The clamping/inner-supporting force data of this product are measured based on the ideal workpiece size.
When the workpiece size deviates from the ideal value, the clamping/inner-supporting force decreases linearly.
If the workpiece size exceeds the clamping range or inner-supporting range, the clamping/inner-supporting force drops to 0.

Paremeter

Gripping range	20-35.5mm	Gripping force	0-8.7N	Theoretical gripping load**	0-333g	Ideal gripping workpiece size*	31mm
Internal gripping range	40-45mm	Internal gripping force	0-7.6N	Theoretical internal gripping load**	0-304g	Ideal internal gripping workpiece size*	43mm
Joint size	G1/8	Life time***	1.5 million times	Contact Temperature	<220℃	Safe pressure***	<120kPa

*: The width of the cuboid that generates the maximum gripping force (two-finger gripping), the outer diameter of the cylinder (multi-finger gripping), the width of the square hole (two-finger internal gripping), or the inner diameter of the circular hole (multi-finger internal gripping);
**: Only the theoretical load of the ideal workpiece under standard working conditions is marked for reference and comparison. The real load capacity is also affected by factors such as the surface structure and roughness of the workpiece. Please take the measured data as the standard;
***: The working air pressure and the surface roughness of the workpiece in the usage scenario may have different degrees of impact on the life-time. Please configure Rochu control Unit. Do not exceed the safe air pressure.

DACModule
(Direct-through)

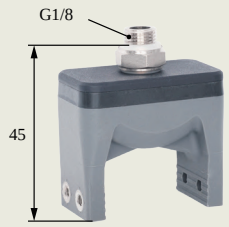

DASModule
(Precise Positioning Direct-through)



DALModule
(Side-through)

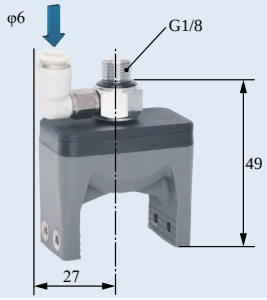

DAMModule
(Precise Positioning Multiple-through)

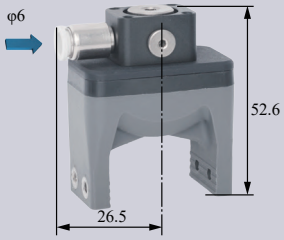

DAC
Rigid Connection Installation

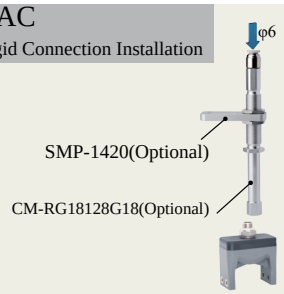

DAC
Buffer Installation



DAS
Matrix Installation

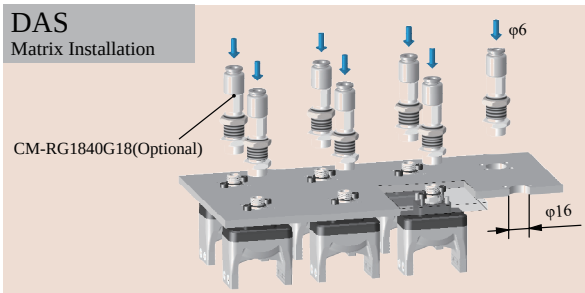

DAC Scara Scara Robot Arm Installation

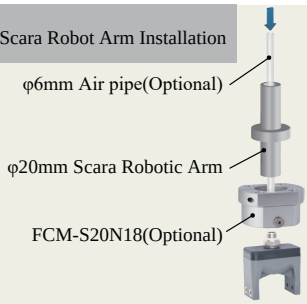

DAS Precise Positioning and Direct-through Installation

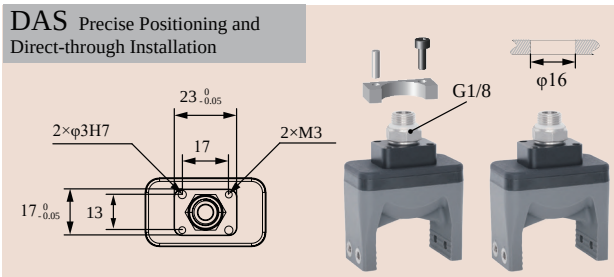

GPC Protective Installation



DAL
Robot Arm Flange Side-through Installation

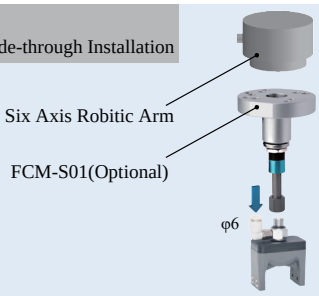

DAS Detection + Profile Block Installation

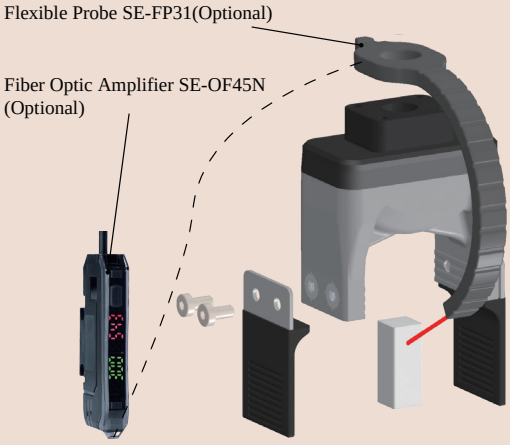

DAM Precise Positioning + Detection + Profile Block Installation

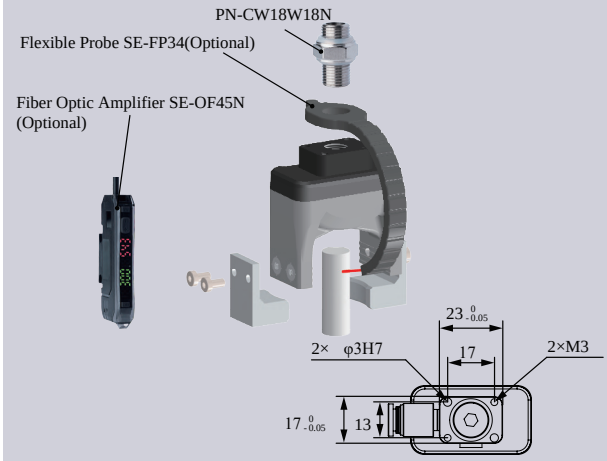

DAC-2G2237[H]/SN Direct-through H Type	DAS-2G2237[H]/SN Direct-through Precision Positioning H Type	DAL-2G2237[H]/SN Side-through H Type	DAM-2G2237[H]/SN Multi-way Precision Positioning H Type
DAC-2G2237[HAS]/SN Direct-through Dust-free H Type	DAS-2G2237[HAS]/SN Direct-through Precision Positioning Dust-free H Type	DAL-2G2237[HAS]/SN Side-through Dust-free H Type	DAM-2G2237[HAS]/SN Multi-way Precision Positioning Dust-free H Type
			
Weight 30g	**Weight** 37.2g	**Weight** 43.4g	**Weight** 41.4g

Product features

- Fingertip open under pressure and clamped in a vacuum. Fingertip distance G can be adjusted by working pressure.It is suggested to be used with Rochu control unit.
- Soft beak material is divided into Normal Material [H] and Dust-free Normal Material [HAS]. When the workpiece is light, or very soft, easy to adhere to adsorp on the soft beak, Dust-free Normal Material [HAS] is preferred.
- Food-grade material, direct food contact approved.

Scan to watch videos

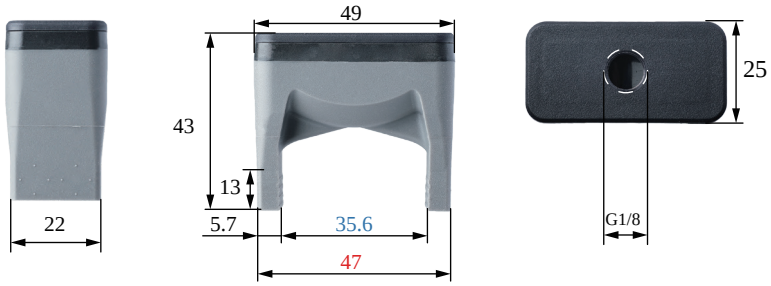

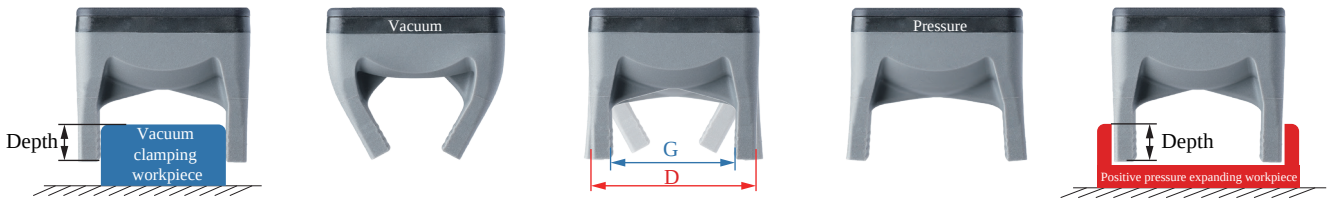

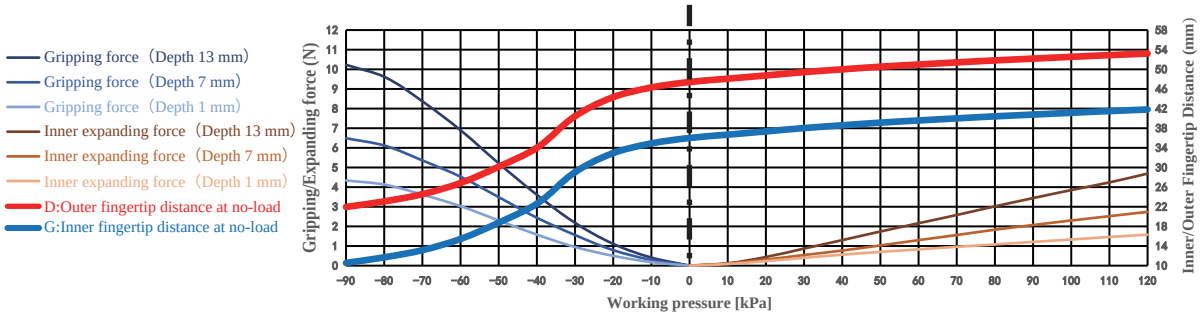

The clamping/inner-supporting force data of this product are measured based on the ideal workpiece size.
When the workpiece size deviates from the ideal value, the clamping/inner-supporting force decreases linearly.
If the workpiece size exceeds the clamping range or inner-supporting range, the clamping/inner-supporting force drops to 0.

Paremeter

Gripping range	18-38mm	Gripping force	0-10.2N	Theoretical gripping load**	0-409g	Ideal gripping workpiece size*	36mm
Internal gripping range	45-50mm	Internal gripping force	0-4.7N	Theoretical internal gripping load**	0-188g	Ideal internal gripping workpiece size*	48mm
Joint size	G1/8	Life time***	1.5 million times	Contact Temperature	<220℃	Safe pressure***	<120kPa

*: The width of the cuboid that generates the maximum gripping force (two-finger gripping), the outer diameter of the cylinder (multi-finger gripping), the width of the square hole (two-finger internal gripping), or the inner diameter of the circular hole (multi-finger internal gripping);
**: Only the theoretical load of the ideal workpiece under standard working conditions is marked for reference and comparison. The real load capacity is also affected by factors such as the surface structure and roughness of the workpiece. Please take the measured data as the standard;
***: The working air pressure and the surface roughness of the workpiece in the usage scenario may have different degrees of impact on the life-time. Please configure Rochu control Unit. Do not exceed the safe air pressure.

DACModule
(Direct-through)

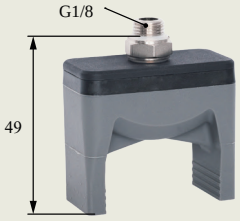

DASModule
(Precise Positioning Direct-through)

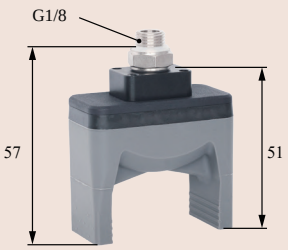

DALModule
(Side-through)



DAMModule
(Precise Positioning Multiple-through)

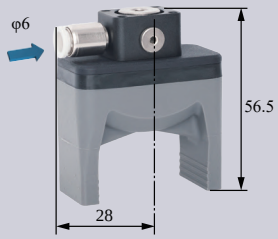

DAC
Rigid Connection Installation

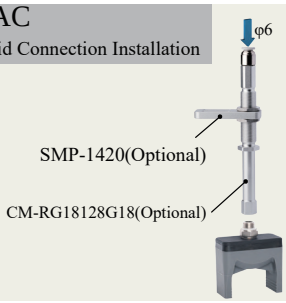

DAC
Buffer Installation

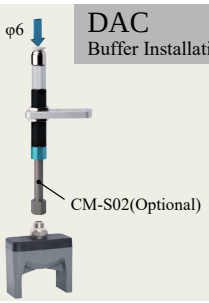

DAS
Matrix Installation

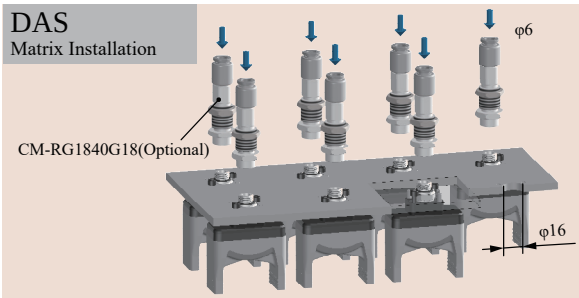

DAC Scara Scara Robot Arm Installation

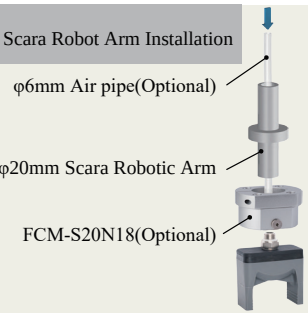

DAL
Robot Arm Flange Side-through Installation

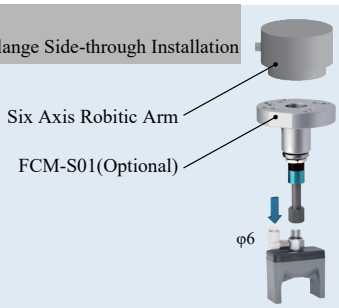

DAS Detection

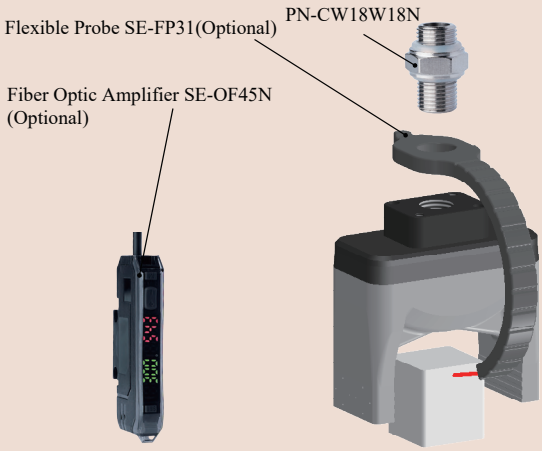

DAM Precise Positioning + Detection

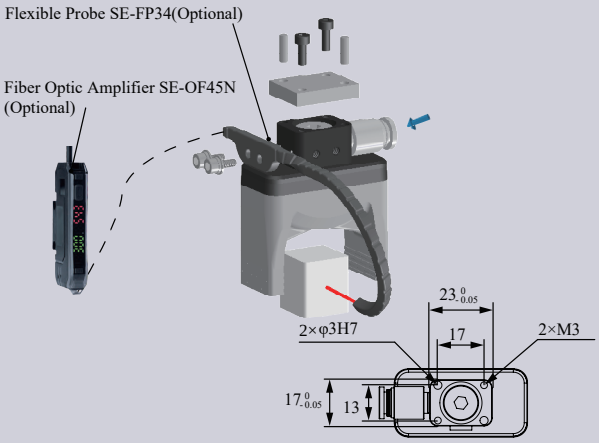

DAS Precise Positioning and Direct-through Installation

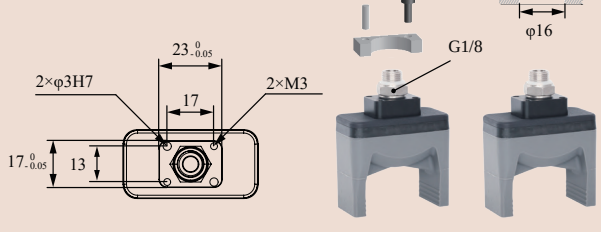

B-2G2237[H]/SN

DAC-2GN2237[H]/SN Direct-through H Type	DAS-2GN2237[H]/SN Direct-through Precision Positioning H Type	DAL-2GN2237[H]/SN Side-through H Type	DAM-2GN2237[HS]/SN Multi-way Precision Positioning H Type
DAC-2GN2237[HAS]/SN Direct-through Dust-free H Type	DAS-2GN2237[HAS]/SN Direct-through Precision Positioning Dust-free H Type	DAL-2GN2237[HAS]/SN Side-through Dust-free H Type	DAM-2GN2237[HAS]/SN Multi-way Precision Positioning Dust-free H Type
			
Weight 32.7g	**Weight** 39.9g	**Weight** 46.1g	**Weight** 44.1g

Product features

- Suitable for complex-shaped workpieces. Profiling nails, designed to fit the workpiece's shape, are installed via soft grippers' fingertip screw holes. They can be made of rigid materials like plastic or metal, depending on the workpiece.
- Fingertips open under pressure state and clamp in a vacuum. Inner fingertips distance G can be adjusted by working pressure.It is suggested to be used with Rochu control unit.
- When soft grippers contact workpieces,especially those with dust-prevention needs,or miniature,lightweight and easily-adsorbable ones,choose dust-free material [HAS] preferentially.

Scan to watch videos



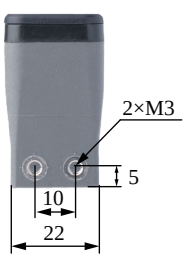

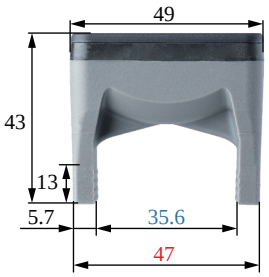

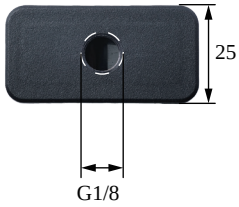

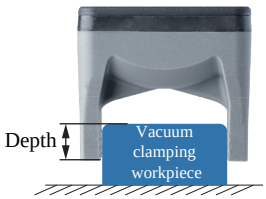



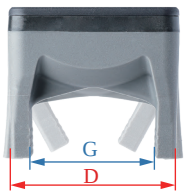





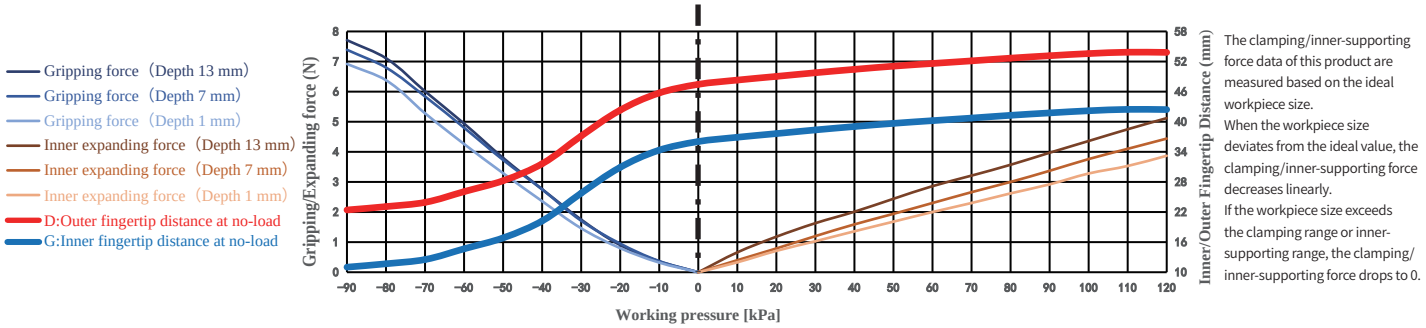

The clamping/inner-supporting force data of this product are measured based on the ideal workpiece size.
When the workpiece size deviates from the ideal value, the clamping/inner-supporting force decreases linearly.
If the workpiece size exceeds the clamping range or inner-supporting range, the clamping/inner-supporting force drops to 0.

Paremeter

Gripping range	18-38mm	Gripping force	0-7.7N	Theoretical gripping load**	0-308g	Ideal gripping workpiece size*	36mm
Internal gripping range	45-50mm	Internal gripping force	0-5.1N	Theoretical internal gripping load**	0-205g	Ideal internal gripping workpiece size*	48mm
Joint size	G1/8	Life time***	1.5 million times	Contact Temperature	<220℃	Safe pressure***	<120kPa

*: The width of the cuboid that generates the maximum gripping force (two-finger gripping), the outer diameter of the cylinder (multi-finger gripping), the width of the square hole (two-finger internal gripping), or the inner diameter of the circular hole (multi-finger internal gripping);
**: Only the theoretical load of the ideal workpiece under standard working conditions is marked for reference and comparison. The real load capacity is also affected by factors such as the surface structure and roughness of the workpiece. Please take the measured data as the standard;
***: The working air pressure and the surface roughness of the workpiece in the usage scenario may have different degrees of impact on the life-time. Please configure Rochu control Unit. Do not exceed the safe air pressure.

DACModule
(Direct-through)

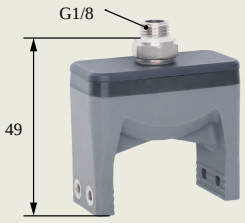

DASModule
(Precise Positioning Direct-through)



DALModule
(Side-through)

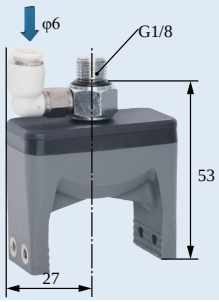

DAMModule
(Precise Positioning Multiple-through)

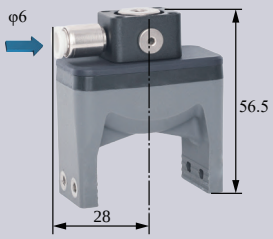

DAC
Rigid Connection Installation

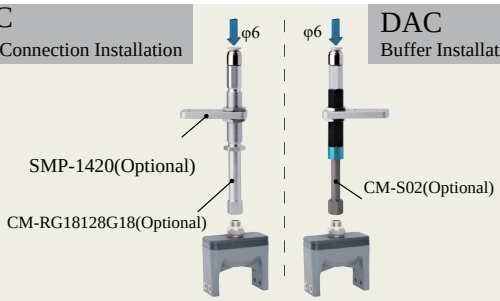

DAC
Buffer Installation

DAS
Matrix Installation

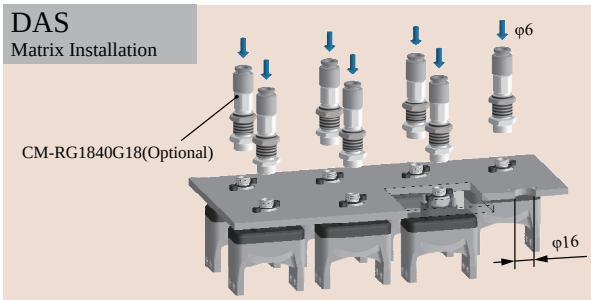

DAC Scara Scara Robot Arm Installation

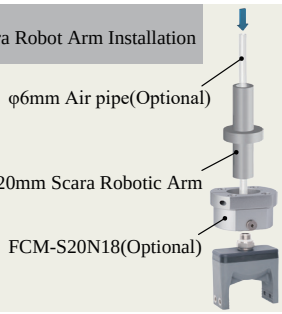

DAS Precise Positioning and Direct-through Installation

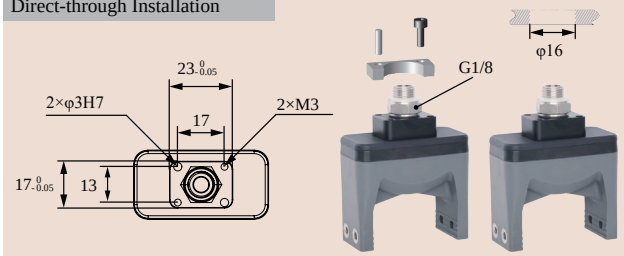

GPC Protective Installation



DAL
Robot Arm Flange Side-through Installation

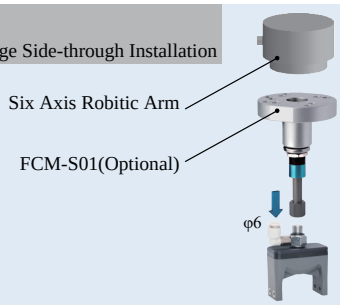

DAS Detection + Profile Block Installation

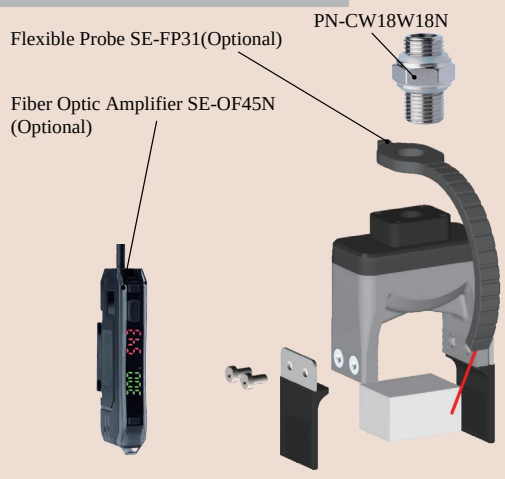

DAM Precise Positioning + Detection + Profile Block Installation

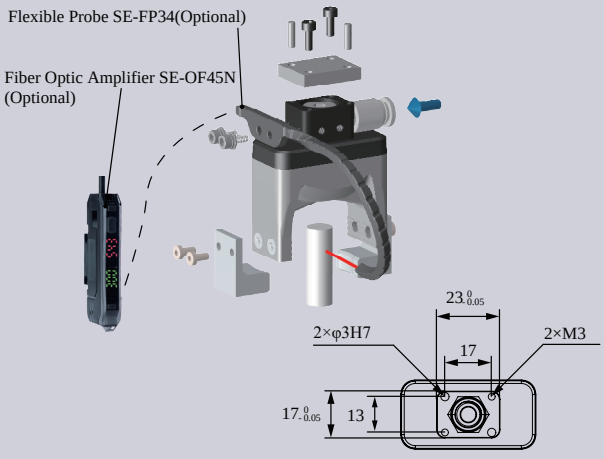

DAC-2G2242[H]/SN Direct-through H Type	DAS-2G2242[H]/SN Direct-through Precision Positioning H Type	DAL-2G2242[H]/SN Side-through H Type	DAM-2G2242[H]/SN Multi-way Precision Positioning H Type
DAC-2G2242[HAS]/SN Direct-through Dust-free H Type	DAS-2G2242[HAS]/SN Direct-through Precision Positioning Dust-free H Type	DAL-2G2242[HAS]/SN Side-through Dust-free H Type	DAM-2G2242[HAS]/SN Multi-way Precision Positioning Dust-free H Type
			
Weight 32g	**Weight** 39.2g	**Weight** 45.4g	**Weight** 43.4g

Product features

- Fingertip open under pressure and clamped in a vacuum. Fingertip distance G can be adjusted by working pressure.It is suggested to be used with Rochu control unit.
- Soft beak material is divided into Normal Material [H] and Dust-free Normal Material [HAS]. When the workpiece is light, or very soft, easy to adhere to adsorp on the soft beak, Dust-free Normal Material [HAS] is preferred.
- Food-grade material, direct food contact approved.

Scan to watch videos

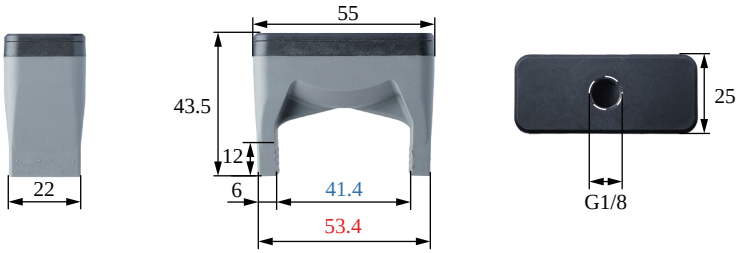

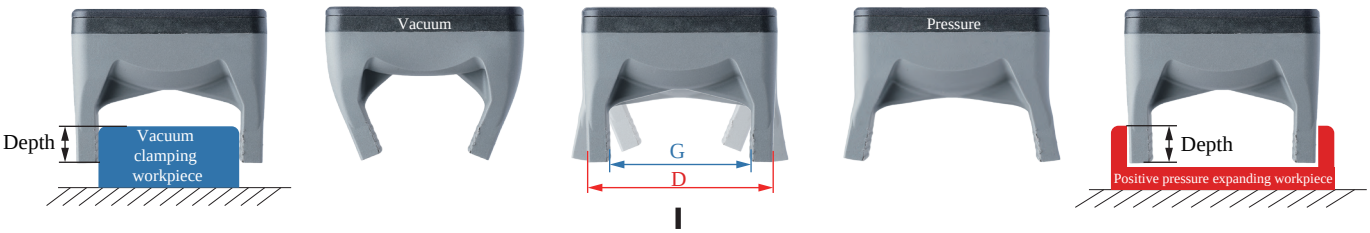

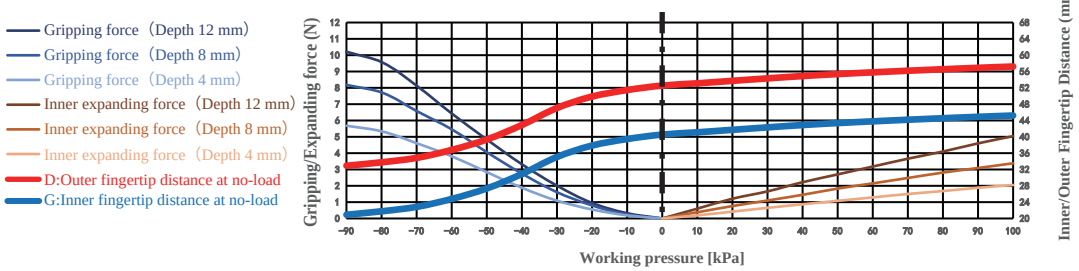

The clamping/inner-supporting force data of this product are measured based on the ideal workpiece size.
When the workpiece size deviates from the ideal value, the clamping/inner-supporting force decreases linearly.
If the workpiece size exceeds the clamping range or inner-supporting range, the clamping/inner-supporting force drops to 0.

Paremeter

Gripping range	26.5-40mm	Gripping force	0-10.2N	Theoretical gripping load**	0-408g	Ideal gripping workpiece size*	40mm
Internal gripping range	50-57mm	Internal gripping force	0-5N	Theoretical internal gripping load**	0-202g	Ideal internal gripping workpiece size*	54mm
Joint size	G1/8	Life time***	1.5 million times	Contact Temperature	<220℃	Safe pressure***	<100kPa

*: The width of the cuboid that generates the maximum gripping force (two-finger gripping), the outer diameter of the cylinder (multi-finger gripping), the width of the square hole (two-finger internal gripping), or the inner diameter of the circular hole (multi-finger internal gripping);
**: Only the theoretical load of the ideal workpiece under standard working conditions is marked for reference and comparison. The real load capacity is also affected by factors such as the surface structure and roughness of the workpiece. Please take the measured data as the standard;
***: The working air pressure and the surface roughness of the workpiece in the usage scenario may have different degrees of impact on the life-time. Please configure Rochu control Unit. Do not exceed the safe air pressure.

DAC Module
(Direct-through)

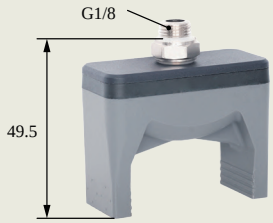

DAS Module
(Precise Positioning Direct-through)

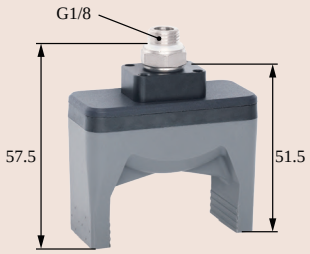

DALModule
(Side-through)

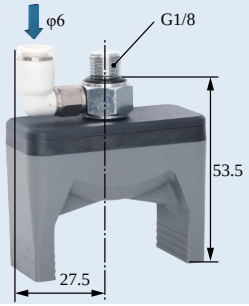

DAM Module
(Precise Positioning Multiple-through)

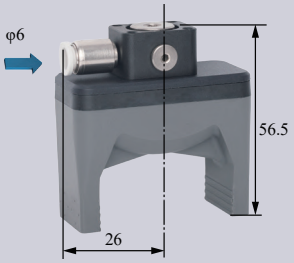

DAC
Rigid Connection Installation

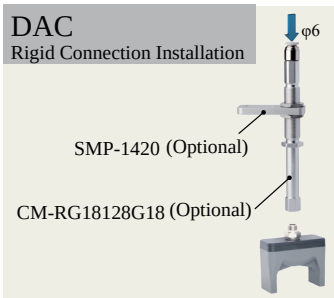

DAC
Buffer Installation

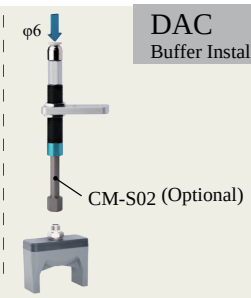

DAS
Matrix Installation

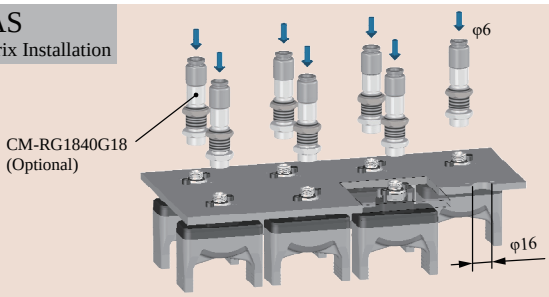

DAC Scara Scara Robot Arm Installation

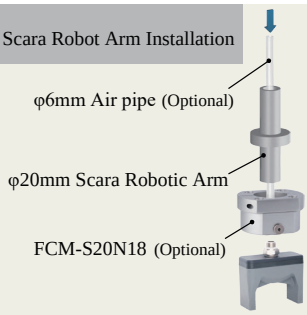

DAL
Robot Arm Flange Side-through Installation

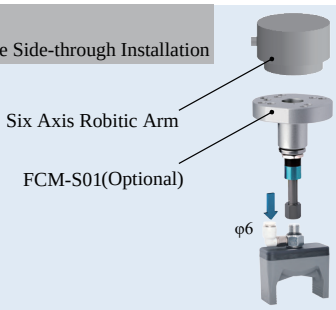

DAS Detection

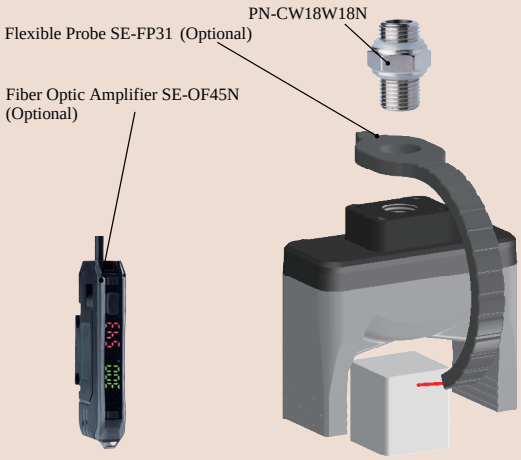

DAM Precise Positioning + Detection

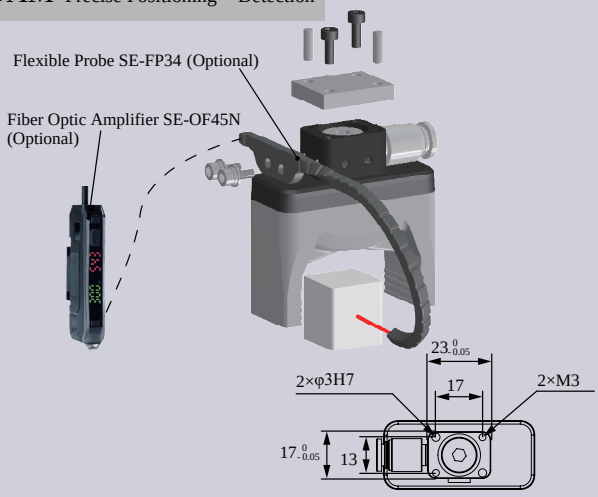

DAS Precise Positioning and Direct-through Installation

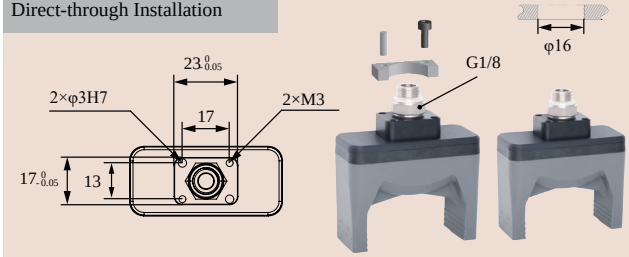

DAC-2GN2242[H]/SN Direct-through H Type	DAS-2GN22 42[H]/SN Direct-through Precision Positioning H Type	DAL-2GN2242[H]/SN Side-through H Type	DAM-2GN2242[HS]/SN Multi-way Precision Positioning H Type
DAC-2GN2242[HAS]/SN Direct-through Dust-free H Type	DAS-2GN2242[HAS]/SN Direct-through Precision Positioning Dust-free H Type	DAL-2GN2242[HAS]/SN Side-through Dust-free H Type	DAM-2GN2242[HAS]/SN Multi-way Precision Positioning Dust-free H Type
			
Weight 34.4g	Weight 41.6g	Weight 47.8g	Weight 45.8g

- Suitable for complex-shaped workpieces. Profiling nails, designed to fit the workpiece's shape, are installed via soft grippers' fingertip screw holes. They can be made of rigid materials like plastic or metal, depending on the workpiece.
- Fingertips open under pressure state and clamp in a vacuum. Inner fingertips distance G can be adjusted by working pressure.It is suggested to be used with Rochu control unit.
- When soft grippers contact workpieces,especially those with dust-prevention needs,or miniature,lightweight and easily-adsorbable ones,choose dust-free material [HAS] preferentially.

Scan to watch videos

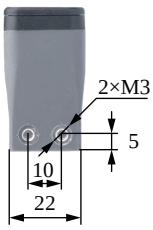

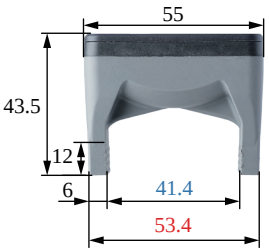

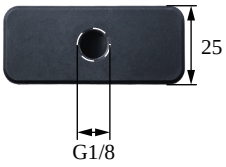



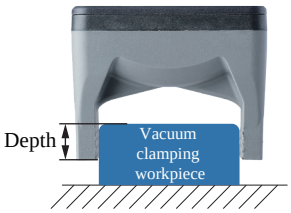



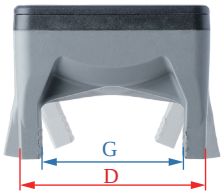





The clamping/inner-supporting

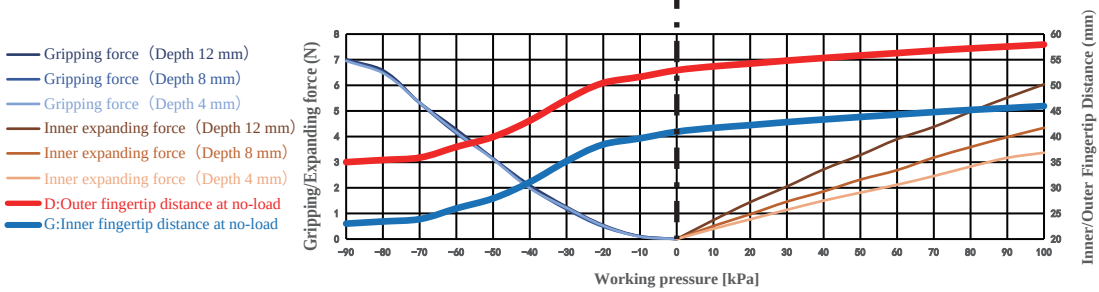

Gripping range	26.5-40mm	Gripping force	0-7N	Theoretical gripping load**	0-280g	Ideal gripping workpiece size*	40mm
Internal gripping range	50-57mm	Internal gripping force	0-6N	Theoretical internal gripping load**	0-242g	Ideal internal gripping workpiece size*	54mm
Joint size	G1/8	Life time***	1.5 million times	Contact Temperature	<220°C	Safe pressure***	<100kPa

DACModule
(Direct-through)

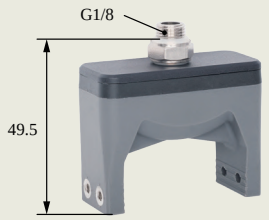

DASModule
(Precise Positioning Direct-through)

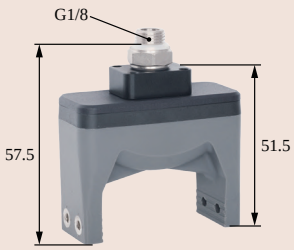

DALModule
(Side-through)

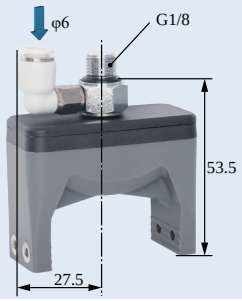

DAMModule
(Precise Positioning Multiple-through)

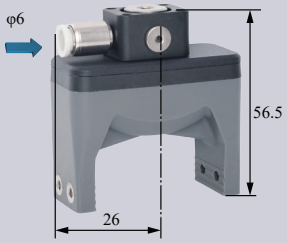

DAC
Rigid Connection Installation

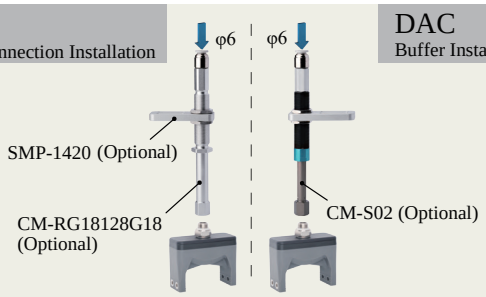

DAC
Buffer Installation

DAS
Matrix Installation

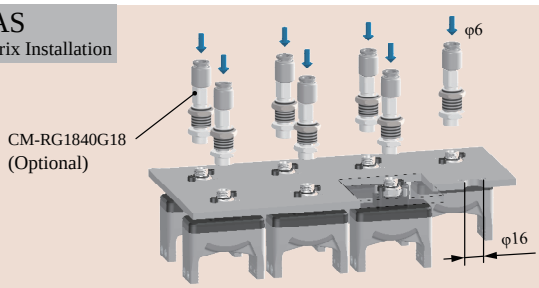

DAC Scara Scara Robot Arm Installation

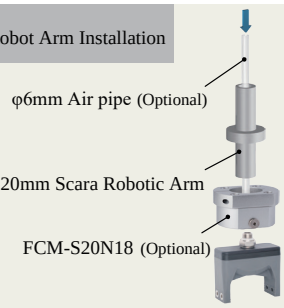

DAS Precise Positioning and Direct-through Installation

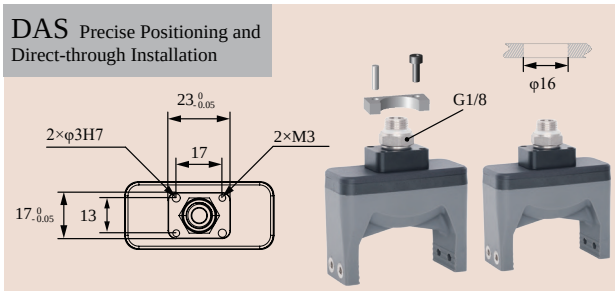

GPC Protective Installation



DAL
Robot Arm Flange Side-through Installation

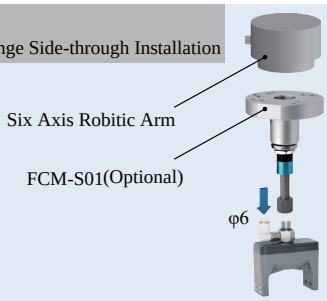

DAS Detection + Profile Block Installation

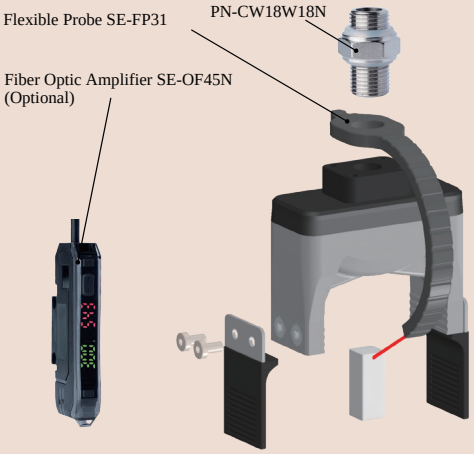

DAM Precise Positioning + Detection + Profile Block Installation

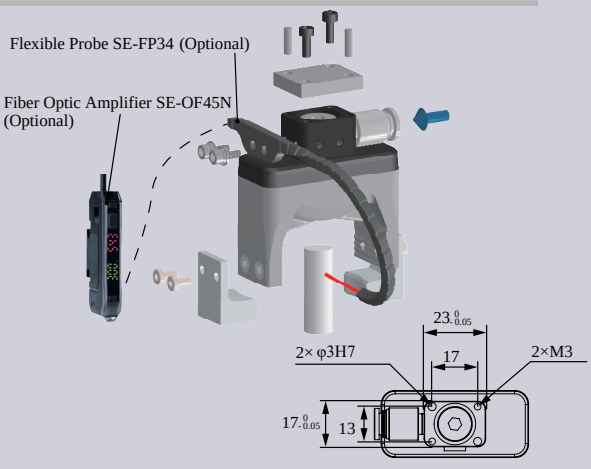

DAC-2G2247[H]/SN Direct-through H Type	DAS-2G2247[H]/SN Direct-through Precision Positioning H Type	DAL-2G2247[H]/SN Side-through H Type	DAM-2G2247[H]/SN Multi-way Precision Positioning H Type
DAC-2G2247[HAS]/SN Direct-through Dust-free H Type	DAS-2G2247[HAS]/SN Direct-through Precision Positioning Dust-free H Type	DAL-2G2247[HAS]/SN Side-through Dust-free H Type	DAM-2G2247[HAS]/SN Multi-way Precision Positioning Dust-free H Type
			
Weight 32g	Weight 39.2g	Weight 45.4g	Weight 43.4g

- Fingertip open under pressure and clamped in a vacuum. Fingertip distance G can be adjusted by working pressure.It is suggested to be used with Rochu control unit.
- Soft beak material is divided into Normal Material [H] and Dust-free Normal Material [HAS]. When the workpiece is light, or very soft, easy to adhere to adsorp on the soft beak, Dust-free Normal Material [HAS] is preferred.
- Food-grade material, direct food contact approved.

Scan to watch videos

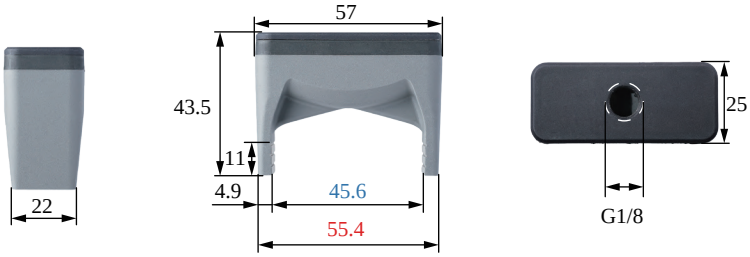

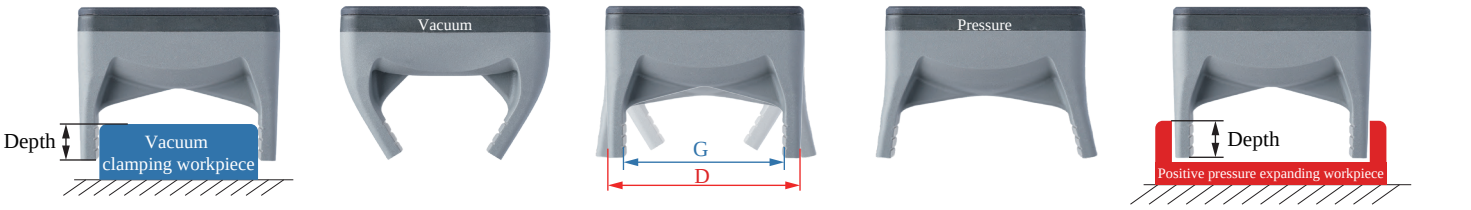

The clamping/inner-supporting

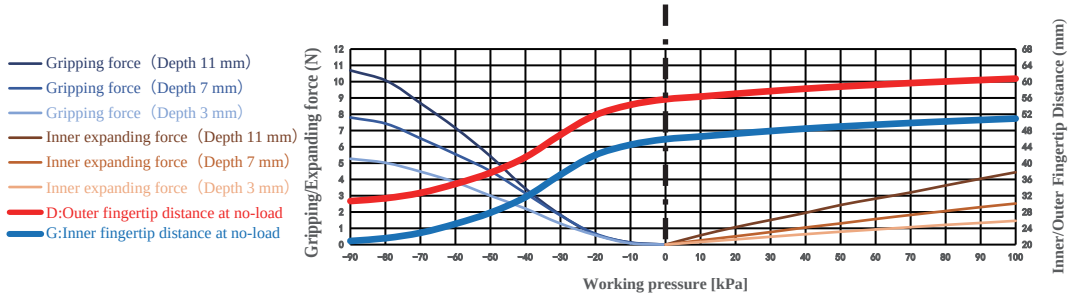

Gripping range	30-48mm	Gripping force	0-10.7N	Theoretical gripping load**	0-428g	Ideal gripping workpiece size*	47mm
Internal gripping range	52-58mm	Internal gripping force	0-4.4N	Theoretical internal gripping load**	0-178g	Ideal internal gripping workpiece size*	56mm
Joint size	G1/8	Life time***	1.5 million times	Contact Temperature	<220°C	Safe pressure***	<100kPa

DACModule
(Direct-through)

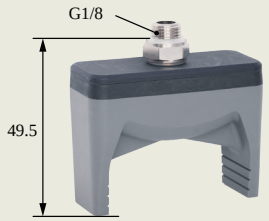

DASModule
(Precise Positioning Direct-through)



DALModule
(Side-through)

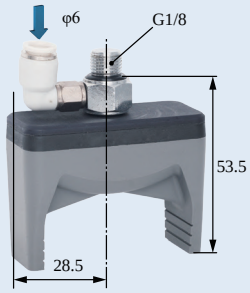

DAMModule
(Precise Positioning Multiple-through)

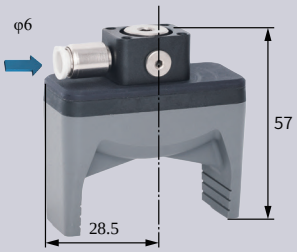

DAC
Rigid Connection Installation

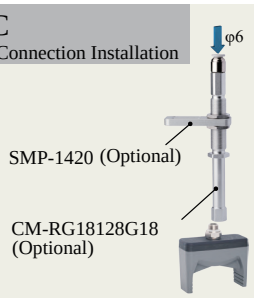

DAC
Buffer Installation

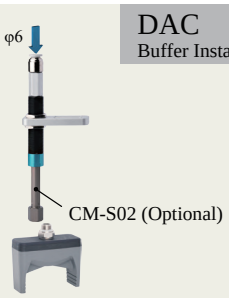

DAS
Matrix Installation

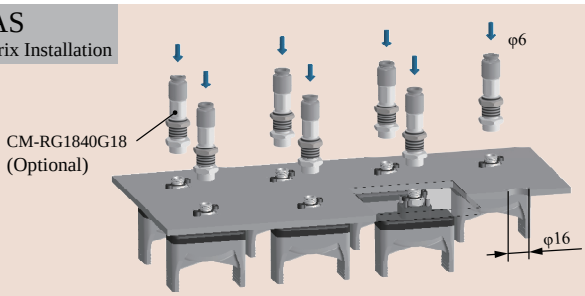

DAC Scara Scara Robot Arm Installation

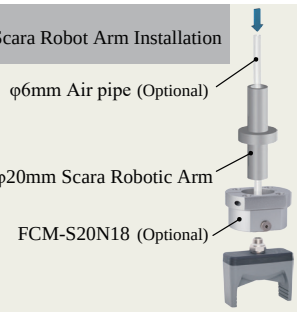

DAL
Robot Arm Flange Side-through Installation

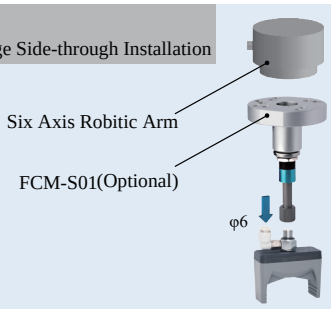

DAS Detection

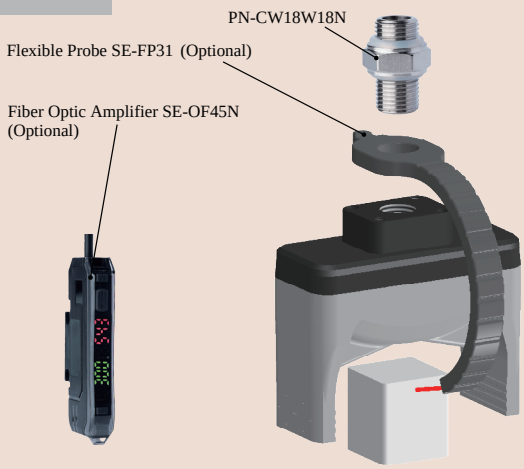

DAM Precise Positioning + Detection

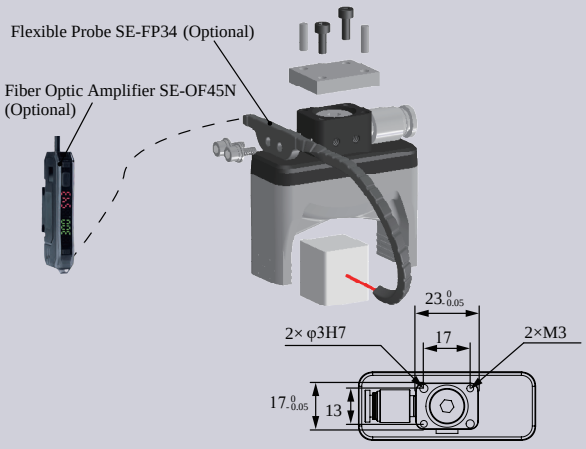

DAS Precise Positioning and Direct-through Installation

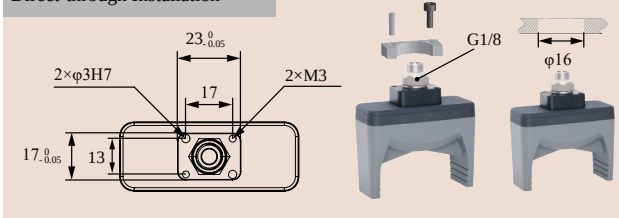

DAC-2G2242[LH]/SN Direct-through Anti-static H Type	DAS-2G2242[LH]/SN Direct-through Anti-static Precision Positioning H Type	DAL-2G2242[LH]/SN Side-through Anti-static H Type	DAM-2G2242[LH]/SN Multi-way Anti-static Precision Positioning H Type
DAC-2G2242[LHAS]/SN Direct-through Anti-static Dust-free H Type	DAS-2G2242[LHAS]/SN Direct-through Anti-static Dust-free Precision Positioning H Type	DAL-2G2242[LHAS]/SN Side-through Anti-static Dust-free H Type	DAM-2G2242[LHAS]/SN Side-through Anti-static Dust-free Precision Positioning H Type
	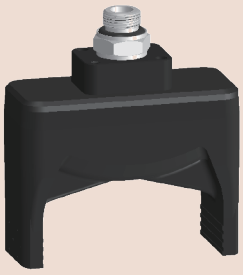		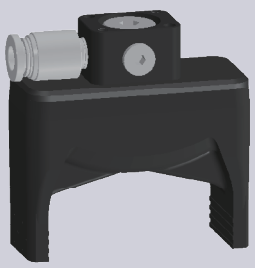
Weight 32g	**Weight** 39.2g	**Weight** 45.4g	**Weight** 43.4g

Product features

- Fingertips open under pressure state and clamp in a vacuum. Inner fingertips distance G and outer fingertips distance D can be adjusted by working pressure.It is suggested to be used with Rochu control unit.
- The Anti-static material meets the requirements of the national standard GB/T11210-2014, with a point-to-point resistance of 0.1-1000MΩ. The Anti-static Dust-free type [LHAS] is more suitable for dealing with workpieces that have dustproof requirements or are miniature and lightweight.

Scan to watch videos

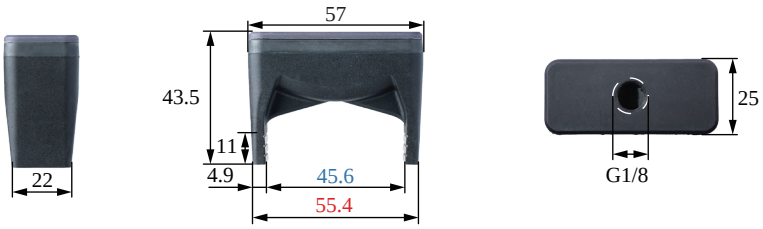

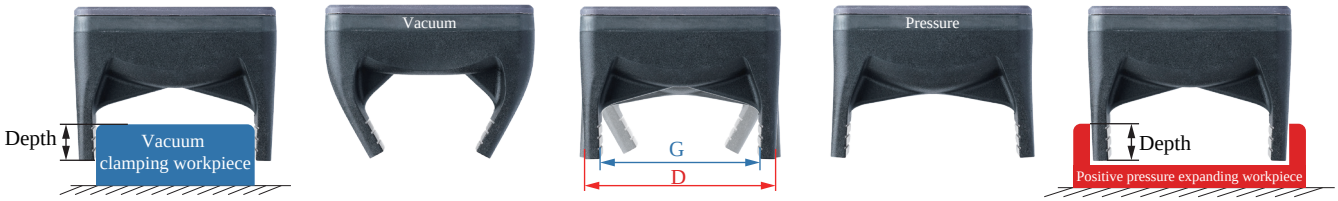

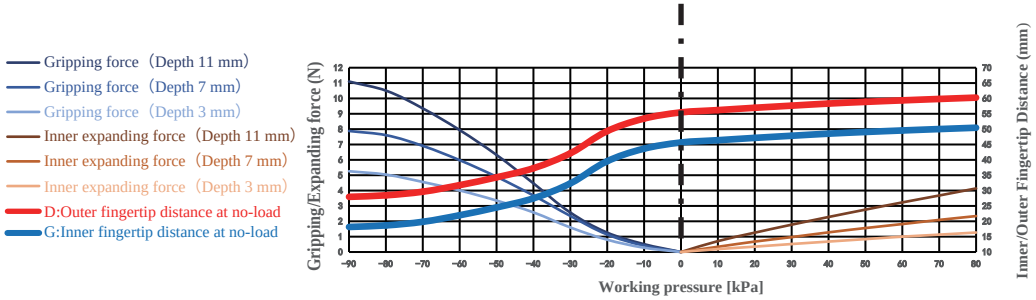

The clamping/inner-supporting force data of this product are measured based on the ideal workpiece size.
When the workpiece size deviates from the ideal value, the clamping/inner-supporting force decreases linearly.
If the workpiece size exceeds the clamping range or inner-supporting range, the clamping/inner-supporting force drops to 0.

Paremeter

Gripping range	30-48mm	Gripping force	0-11.1N	Theoretical gripping load**	0-444g	Ideal gripping workpiece size*	46mm
Internal gripping range	52-58mm	Internal gripping force	0-4.1N	Theoretical internal gripping load**	0-166g	Ideal internal gripping workpiece size*	56mm
Joint size	G1/8	Life time***	1.5 million times	Contact Temperature	<220°C	Safe pressure***	<80kPa

*: The width of the cuboid that generates the maximum gripping force (two-finger gripping), the outer diameter of the cylinder (multi-finger gripping), the width of the square hole (two-finger internal gripping), or the inner diameter of the circular hole (multi-finger internal gripping);
**: Only the theoretical load of the ideal workpiece under standard working conditions is marked for reference and comparison. The real load capacity is also affected by factors such as the surface structure and roughness of the workpiece. Please take the measured data as the standard;
***: The working air pressure and the surface roughness of the workpiece in the usage scenario may have different degrees of impact on the life-time. Please configure Rochu control Unit. Do not exceed the safe air pressure.

DACModule
(Direct-through)

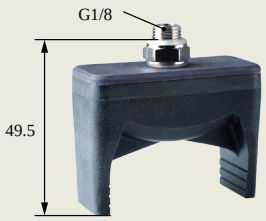

DASModule
(Precise Positioning Direct-through)

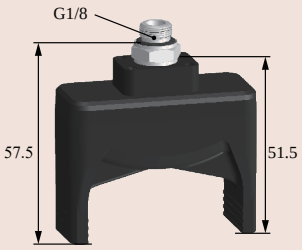

DALModule
(Side-through)

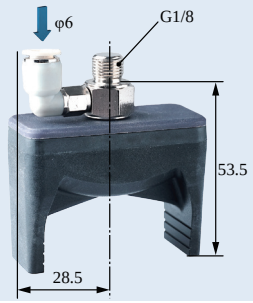

DAMModule
(Precise Positioning Multiple-through)

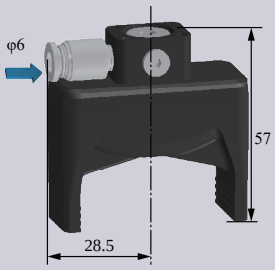

DAC
Rigid Connection Installation

DAC
Buffer Installation

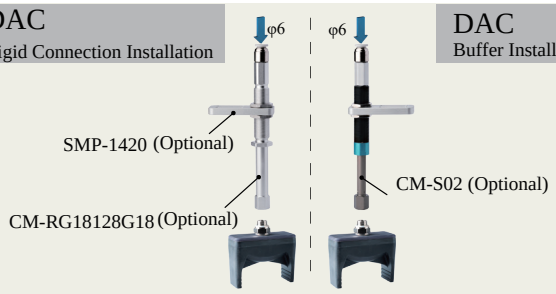

DAS
Matrix Installation

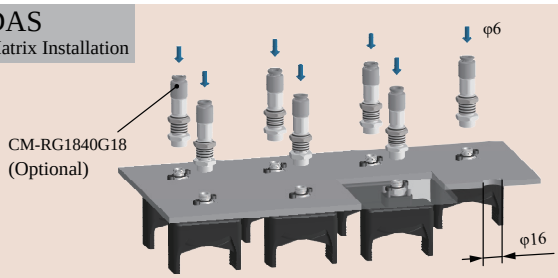

DAC Scara Scara Robot Arm Installation

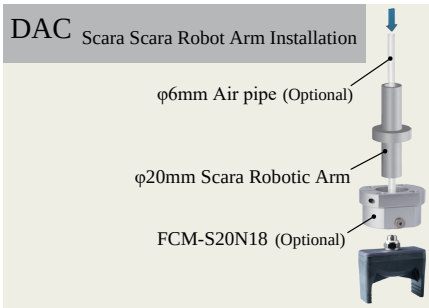

DAL
Robot Arm Flange Side-through Installation

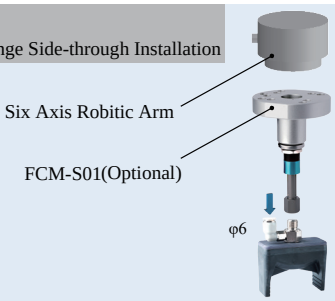

DAS Detection

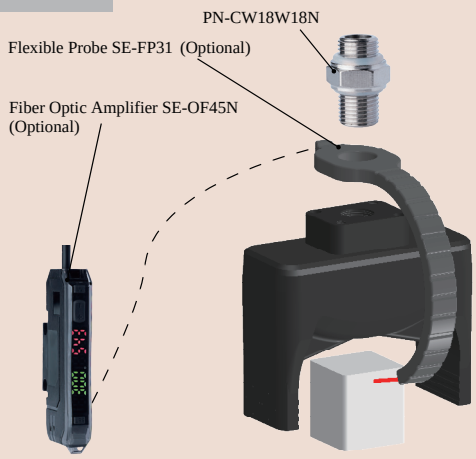

DAM Precise Positioning + Detection

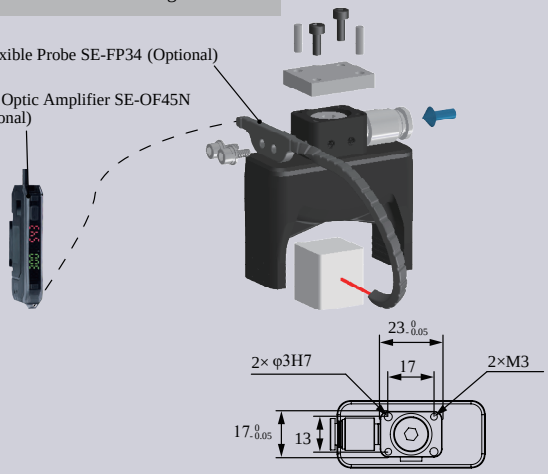

DAS Precise Positioning and Direct-through Installation

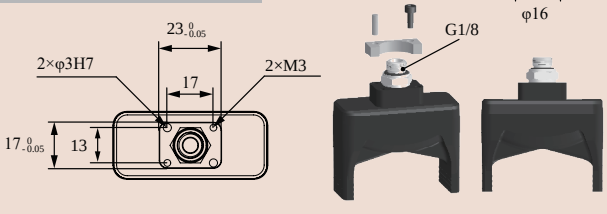

B-2G2247[LH]/SN

DAC-2GN2247[H]/SN Direct-through H Type	DAS-2GN2247[H]/SN Direct-through Precision Positioning H Type	DAL-2GN2247[H]/SN Side-through H Type	DAM-2GN2247[HS]/SN Multi-way Precision Positioning H Type
DAC-2GN2247[HAS]/SN Direct-through Dust-free H Type	DAS-2GN2247[HAS]/SN Direct-through Precision Positioning Dust-free H Type	DAL-2GN2247[HAS]/SN Side-through Dust-free H Type	DAM-2GN2247[HAS]/SN Multi-way Precision Positioning Dust-free H Type
			
Weight 34.2g	**Weight** 41.4g	**Weight** 47.6g	**Weight** 45.6g

Product features

- Suitable for complex-shaped workpieces. Profiling nails, designed to fit the workpiece's shape, are installed via soft grippers' fingertip screw holes. They can be made of rigid materials like plastic or metal, depending on the workpiece.
- Fingertips open under pressure state and clamp in a vacuum. Inner fingertips distance G can be adjusted by working pressure.It is suggested to be used with Rochu control unit.
- When soft grippers contact workpieces,especially those with dust-prevention needs,or miniature,lightweight and easily-adsorbable ones,choose dust-free material [HAS] preferentially.

Scan to watch videos

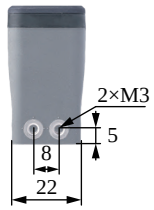

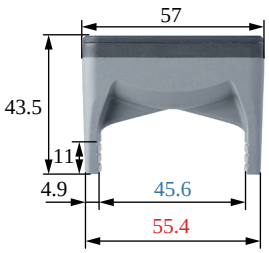

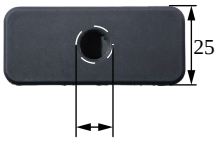

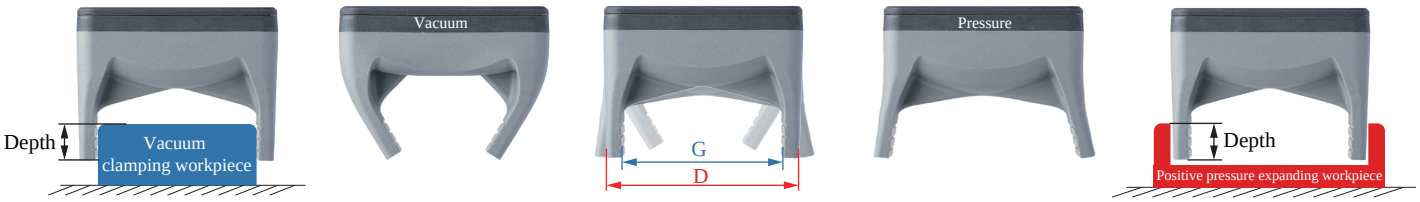

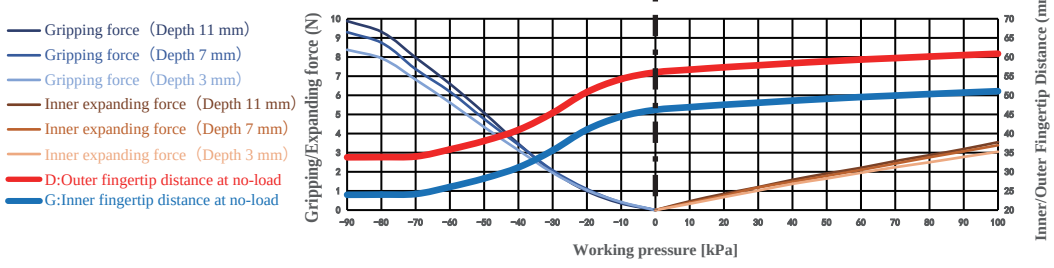

The clamping/inner-supporting force data of this product are measured based on the ideal workpiece size.
When the workpiece size deviates from the ideal value, the clamping/inner-supporting force decreases linearly.
If the workpiece size exceeds the clamping range or inner-supporting range, the clamping/inner-supporting force drops to 0.

Paremeter

Gripping range	30-48mm	Gripping force	0-9.9N	Theoretical gripping load**	0-395g	Ideal gripping workpiece size*	46mm
Internal gripping range	52-58mm	Internal gripping force	0-3.6N	Theoretical internal gripping load**	0-142g	Ideal internal gripping workpiece size*	56mm
Joint size	G1/8	Life time***	1.5 million times	Contact Temperature	<220℃	Safe pressure***	<100kPa

*: The width of the cuboid that generates the maximum gripping force (two-finger gripping), the outer diameter of the cylinder (multi-finger gripping), the width of the square hole (two-finger internal gripping), or the inner diameter of the circular hole (multi-finger internal gripping);
**: Only the theoretical load of the ideal workpiece under standard working conditions is marked for reference and comparison. The real load capacity is also affected by factors such as the surface structure and roughness of the workpiece. Please take the measured data as the standard;
***: The working air pressure and the surface roughness of the workpiece in the usage scenario may have different degrees of impact on the life-time. Please configure Rochu control Unit. Do not exceed the safe air pressure.

DACModule
(Direct-through)

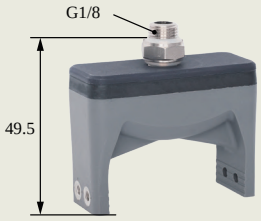

DASModule
(Precise Positioning Direct-through)



DALModule
(Side-through)

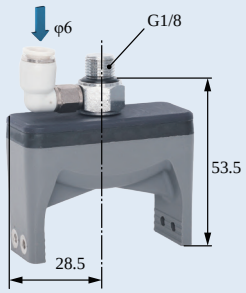

DAMModule
(Precise Positioning Multiple-through)

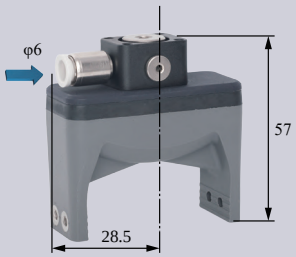

DAC
Rigid Connection Installation

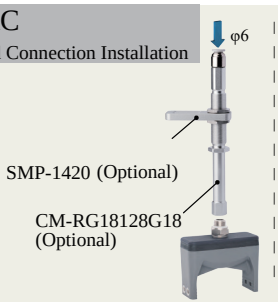

DAC
Buffer Installation

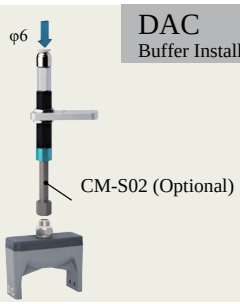

DAS
Matrix Installation

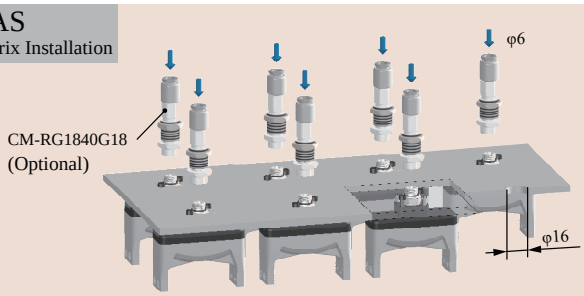

DAC Scara Scara Robot Arm Installation

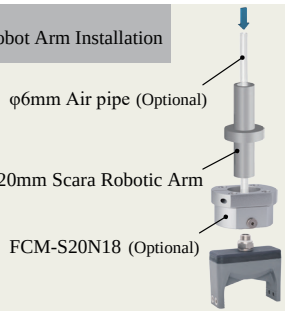

DAS Precise Positioning and Direct-through Installation

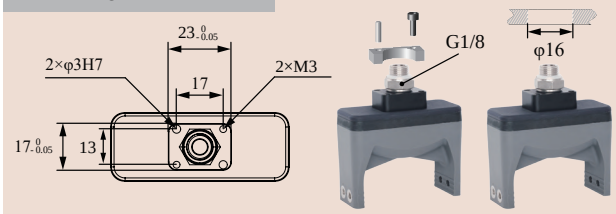

GPC Protective Installation



DAL
Robot Arm Flange Side-through Installation

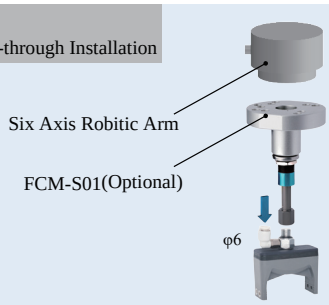

DAS Detection + Profile Block Installation

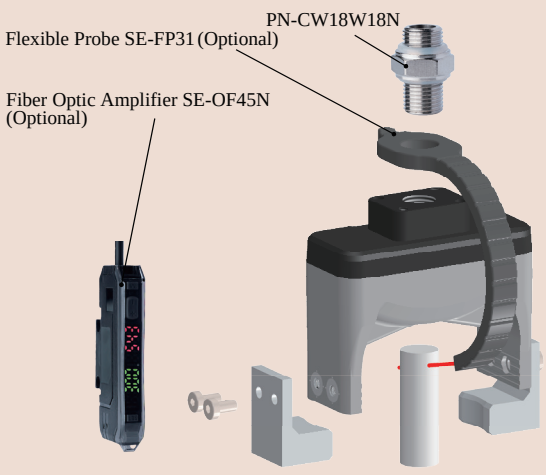

DAM Precise Positioning + Detection + Profile Block Installation

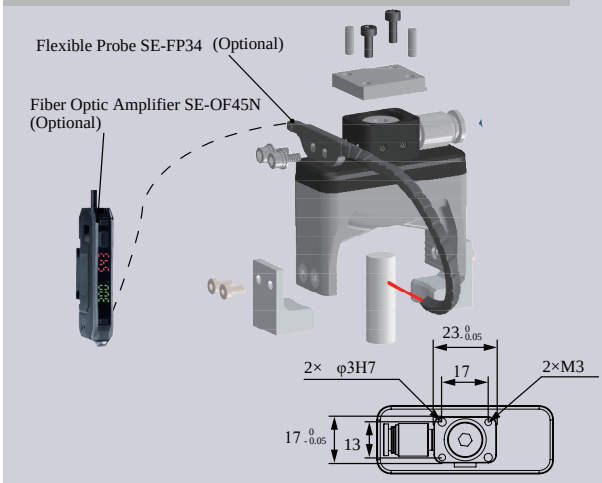

DAC-2G2252[H]/SN Direct-through H Type	DAS-2G2252[H]/SN Direct-through Precision Positioning H Type	DAL-2G2252[H]/SN Side-through H Type	DAM-2G2252[H]/SN Multi-way Precision Positioning H Type
DAC-2G2252[HAS]/SN Direct-through Dust-free H Type	DAS-2G2252[HAS]/SN Direct-through Precision Positioning Dust-free H Type	DAL-2G2252[HAS]/SN Side-through Dust-free H Type	DAM-2G2252[HAS]/SN Multi-way Precision Positioning Dust-free H Type
			
Weight 34.4g	**Weight** 41.6g	**Weight** 47.8g	**Weight** 45.8g

Product features

- Fingertip open under pressure and clamped in a vacuum. Fingertip distance G can be adjusted by working pressure.It is suggested to be used with Rochu control unit.
- Soft beak material is divided into Normal Material [H] and Dust-free Normal Material [HAS]. When the workpiece is light, or very soft, easy to adhere to adsorp on the soft beak, Dust-free Normal Material [HAS] is preferred.
- Food-grade material, direct food contact approved.

Scan to watch videos

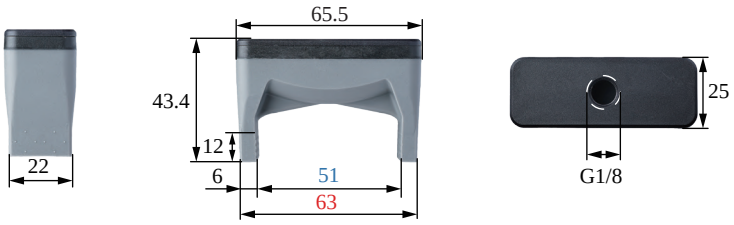

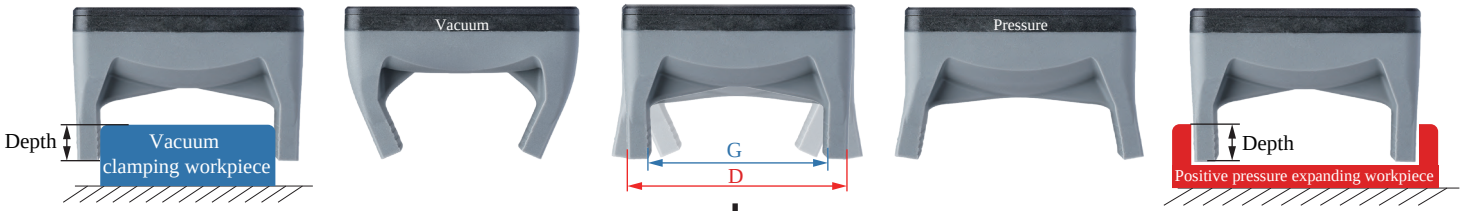

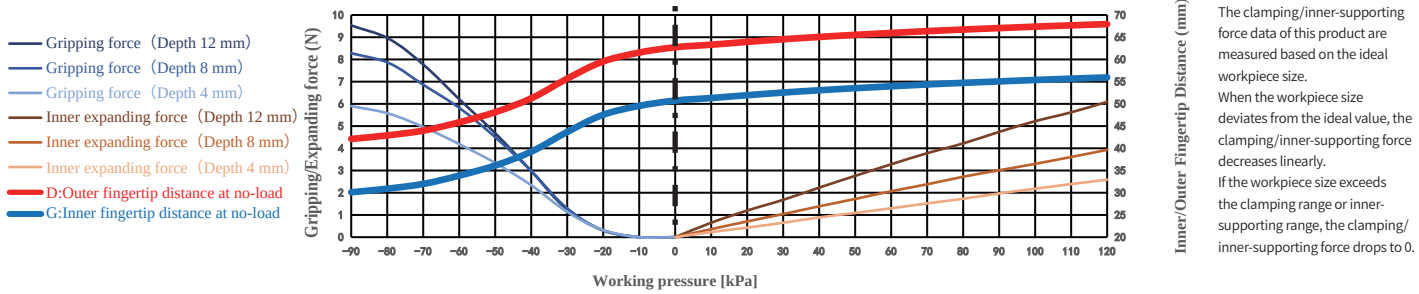

The clamping/inner-supporting force data of this product are measured based on the ideal workpiece size.
When the workpiece size deviates from the ideal value, the clamping/inner-supporting force decreases linearly.
If the workpiece size exceeds the clamping range or inner-supporting range, the clamping/inner-supporting force drops to 0.

Paremeter

Gripping range	34-52mm	Gripping force	0-9.5N	Theoretical gripping load**	0-381g	Ideal gripping workpiece size*	52mm
Internal gripping range	60-67mm	Internal gripping force	0-6.1N	Theoretical internal gripping load**	0-244g	Ideal internal gripping workpiece size*	64mm
Joint size	G1/8	Life time***	1.5 million times	Contact Temperature	<220°C	Safe pressure***	<120kPa

*: The width of the cuboid that generates the maximum gripping force (two-finger gripping), the outer diameter of the cylinder (multi-finger gripping), the width of the square hole (two-finger internal gripping), or the inner diameter of the circular hole (multi-finger internal gripping);
**: Only the theoretical load of the ideal workpiece under standard working conditions is marked for reference and comparison. The real load capacity is also affected by factors such as the surface structure and roughness of the workpiece. Please take the measured data as the standard;
***: The working air pressure and the surface roughness of the workpiece in the usage scenario may have different degrees of impact on the life-time. Please configure Rochu control Unit. Do not exceed the safe air pressure.

DACModule
(Direct-through)

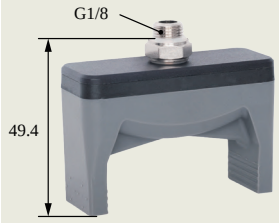

DASModule
(Precise Positioning Direct-through)

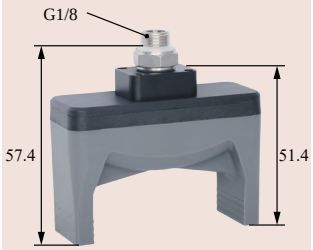

DALModule
(Side-through)

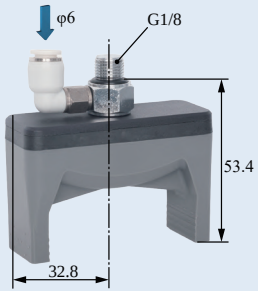

DAMModule
(Precise Positioning Multiple-through)

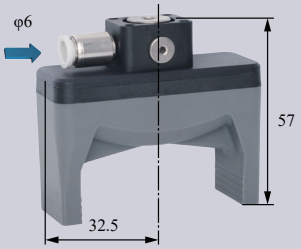

DAC
Rigid Connection Installation

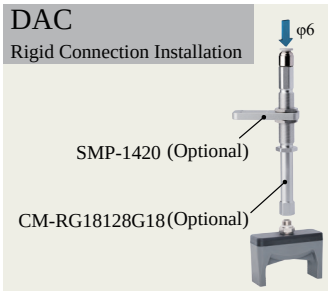

DAC
Buffer Installation

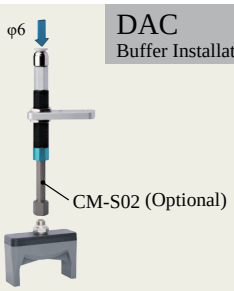

DAS
Matrix Installation

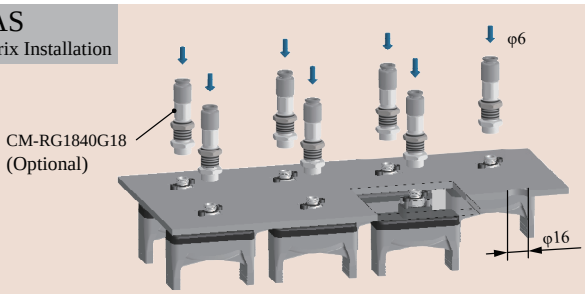

DAC Scara Scara Robot Arm Installation

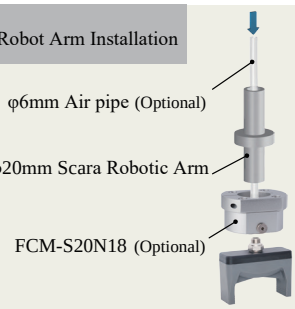

DAL
Robot Arm Flange Side-through Installation

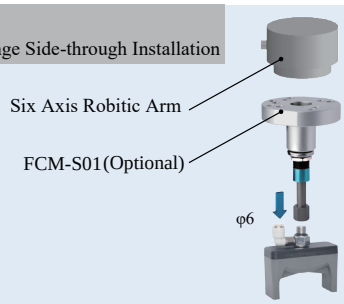

DAS Detection

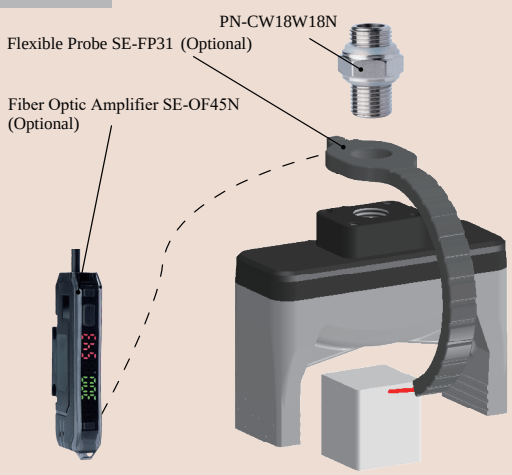

DAM Precise Positioning + Detection

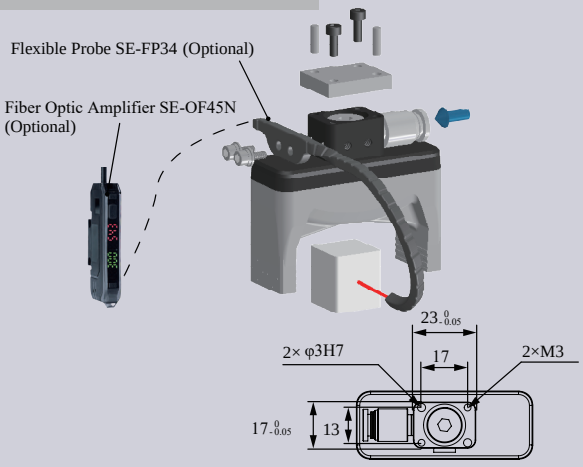

DAS Precise Positioning and Direct-through Installation

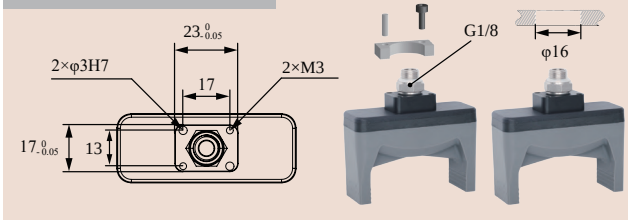

B-2G2252[H]/SN

DAC-2GN2252[H]/SN Direct-through H Type	DAS-2GN2252[H]/SN Direct-through Precision Positioning H Type	DAL-2GN2252[H]/SN Side-through H Type	DAM-2GN2252[HS]/SN Multi-way Precision Positioning H Type
DAC-2GN2252[HAS]/SN Direct-through Dust-free H Type	DAS-2GN2252[HAS]/SN Direct-through Precision Positioning Dust-free H Type	DAL-2GN2252[HAS]/SN Side-through Dust-free H Type	DAM-2GN2252[HAS]/SN Multi-way Precision Positioning Dust-free H Type
			
Weight 36.5g	**Weight** 43.7g	**Weight** 49.9g	**Weight** 47.9g

Product features

- Suitable for complex-shaped workpieces. Profiling nails, designed to fit the workpiece's shape, are installed via soft grippers' fingertip screw holes. They can be made of rigid materials like plastic or metal, depending on the workpiece.
- Fingertips open under pressure state and clamp in a vacuum. Inner fingertips distance G can be adjusted by working pressure.It is suggested to be used with Rochu control unit.
- When soft grippers contact workpieces,especially those with dust-prevention needs,or miniature,lightweight and easily-adsorbable ones,choose dust-free material [HAS] preferentially.

Scan to watch videos



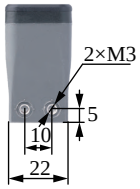

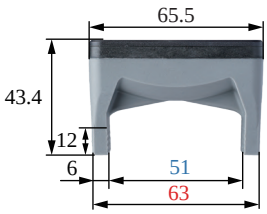



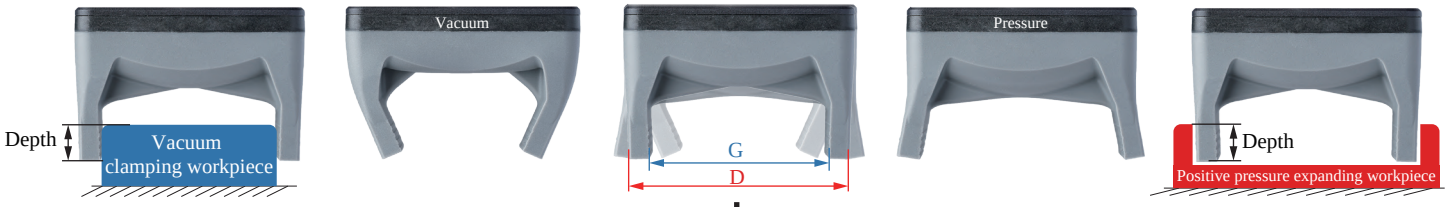

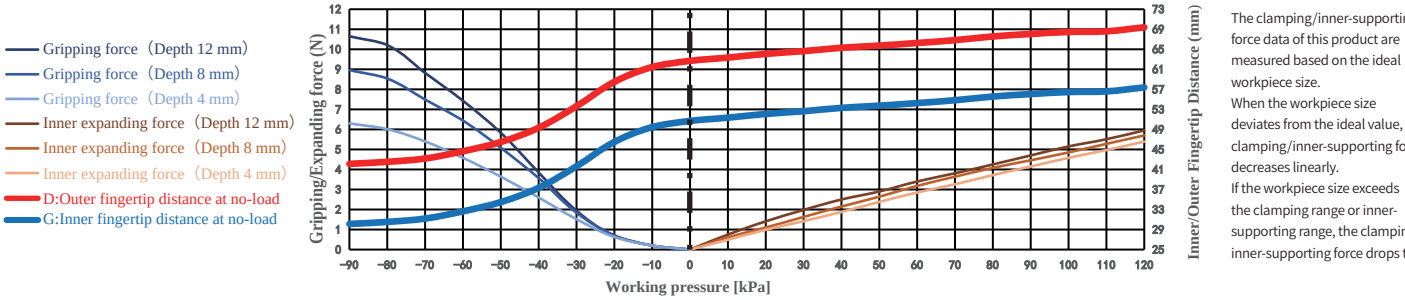

The clamping/inner-supporting force data of this product are measured based on the ideal workpiece size.
When the workpiece size deviates from the ideal value, the clamping/inner-supporting force decreases linearly.
If the workpiece size exceeds the clamping range or inner-supporting range, the clamping/inner-supporting force drops to 0.

Paremeter

Gripping range	34-52mm	Gripping force	0-10.7N	Theoretical gripping load**	0-426g	Ideal gripping workpiece size*	51mm
Internal gripping range	60-67mm	Internal gripping force	0-6N	Theoretical internal gripping load**	0-238g	Ideal internal gripping workpiece size*	64mm
Joint size	G1/8	Life time***	1.5 million times	Contact Temperature	<220℃	Safe pressure***	<120kPa

*: The width of the cuboid that generates the maximum gripping force (two-finger gripping), the outer diameter of the cylinder (multi-finger gripping), the width of the square hole (two-finger internal gripping), or the inner diameter of the circular hole (multi-finger internal gripping);
**: Only the theoretical load of the ideal workpiece under standard working conditions is marked for reference and comparison. The real load capacity is also affected by factors such as the surface structure and roughness of the workpiece. Please take the measured data as the standard;
***: The working air pressure and the surface roughness of the workpiece in the usage scenario may have different degrees of impact on the life-time. Please configure Rochu control Unit. Do not exceed the safe air pressure.

DACModule
(Direct-through)

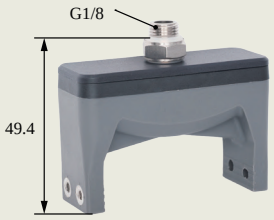

DASModule
(Precise Positioning Direct-through)

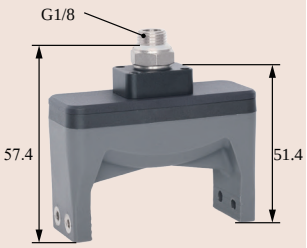

DALModule
(Side-through)

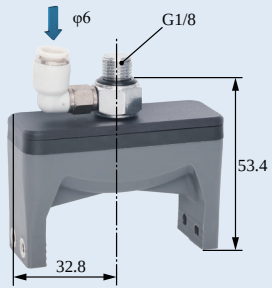

DAMModule
(Precise Positioning Multiple-through)

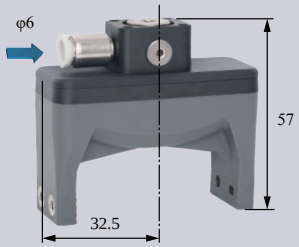

DAC
Rigid Connection Installation

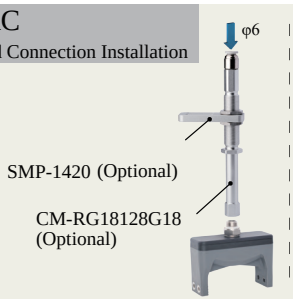

DAC
Buffer Installation

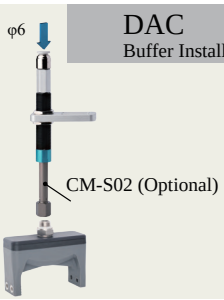

DAS
Matrix Installation

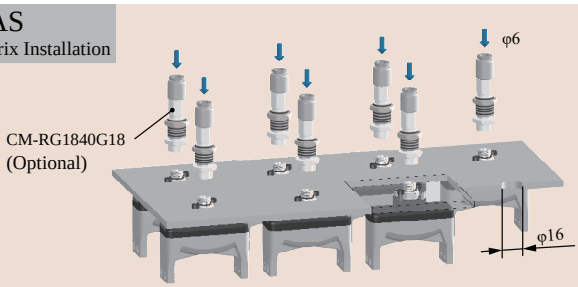

DAC Scara Scara Robot Arm Installation

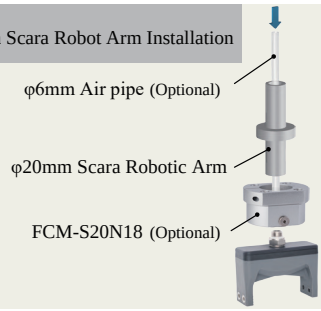

DAS Precise Positioning and Direct-through Installation

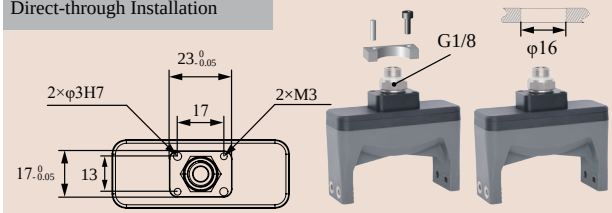

GPC Protective Installation



DAL
Robot Arm Flange Side-through Installation

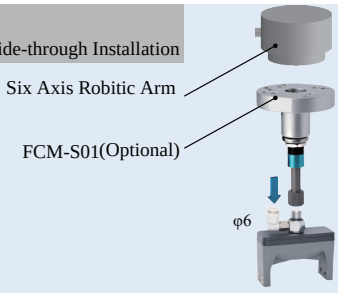

DAS Detection + Profile Block Installation

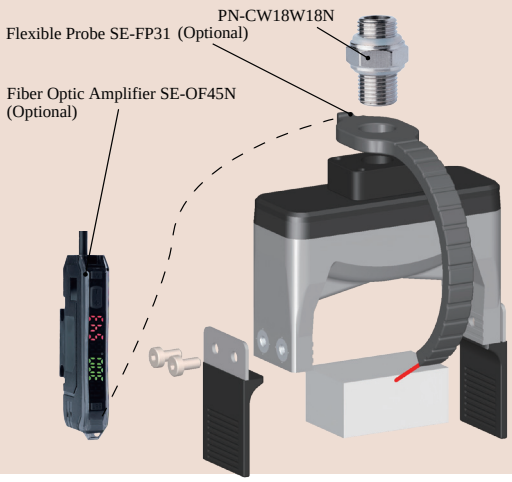

DAM Precise Positioning + Detection + Profile Block Installation

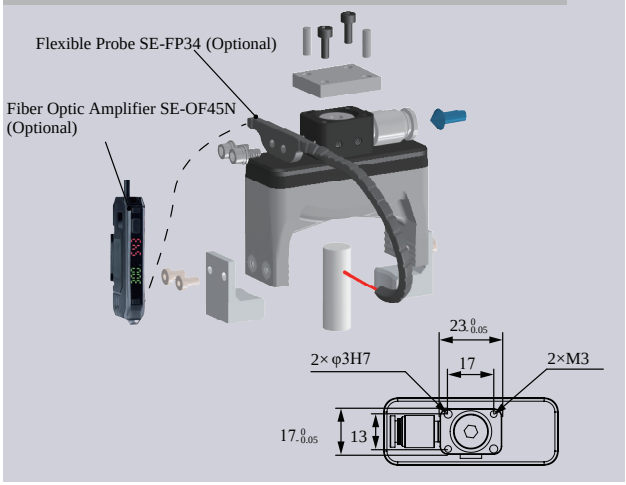

B-2GN225[H]/SN

DAC-2G2257[H]/SN Direct-through H Type	DAS-2G2257[H]/SN Direct-through Precision Positioning H Type	DAL-2G2257[H]/SN Side-through H Type	DAM-2G2257[H]/SN Multi-way Precision Positioning H Type
DAC-2G2257[HAS]/SN Direct-through Dust-free H Type	DAS-2G2257[HAS]/SN Direct-through Precision Positioning Dust-free H Type	DAL-2G2257[HAS]/SN Side-through Dust-free H Type	DAM-2G2257[HAS]/SN Multi-way Precision Positioning Dust-free H Type
			
Weight 35.4g	**Weight** 42.6g	**Weight** 48.8g	**Weight** 46.8g

Product features

- Fingertip open under pressure and clamped in a vacuum. Fingertip distance G can be adjusted by working pressure.It is suggested to be used with Rochu control unit.
- Soft beak material is divided into Normal Material [H] and Dust-free Normal Material [HAS]. When the workpiece is light, or very soft, easy to adhere to adsorp on the soft beak, Dust-free Normal Material [HAS] is preferred.
- Food-grade material, direct food contact approved.

Scan to watch videos

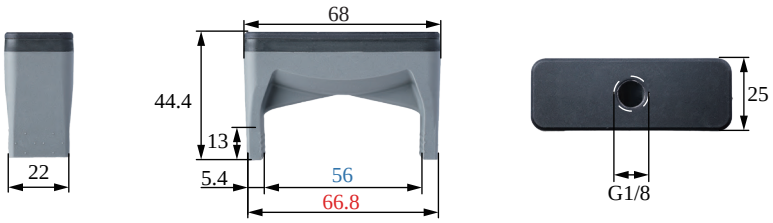

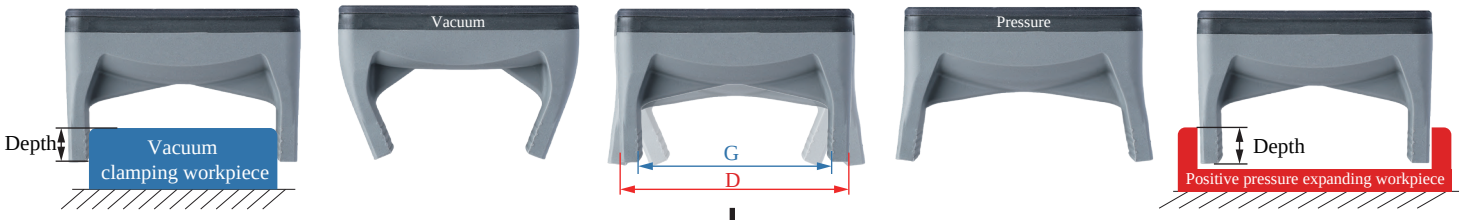

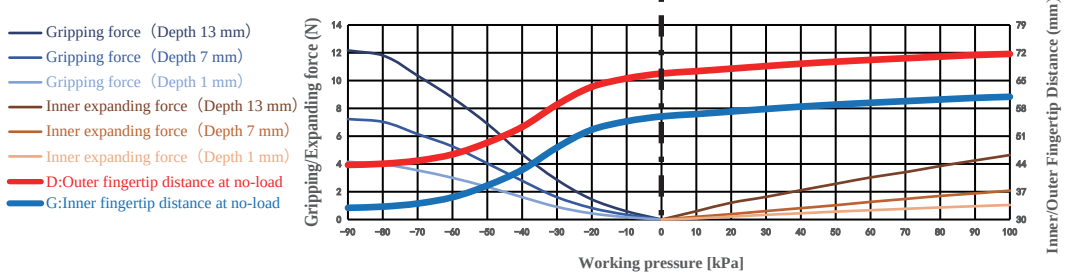

The clamping/inner-supporting force data of this product are measured based on the ideal workpiece size.
When the workpiece size deviates from the ideal value, the clamping/inner-supporting force decreases linearly.
If the workpiece size exceeds the clamping range or inner-supporting range, the clamping/inner-supporting force drops to 0.

Paremeter

Gripping range	38-59mm	Gripping force	0-12.2N	Theoretical gripping load**	0-487g	Ideal gripping workpiece size*	58mm
Internal gripping range	65-70mm	Internal gripping force	0-4.6N	Theoretical internal gripping load**	0-186g	Ideal internal gripping workpiece size*	67mm
Joint size	G1/8	Life time***	1.5 million times	Contact Temperature	<220°C	Safe pressure***	<100kPa

*: The width of the cuboid that generates the maximum gripping force (two-finger gripping), the outer diameter of the cylinder (multi-finger gripping), the width of the square hole (two-finger internal gripping), or the inner diameter of the circular hole (multi-finger internal gripping);
**: Only the theoretical load of the ideal workpiece under standard working conditions is marked for reference and comparison. The real load capacity is also affected by factors such as the surface structure and roughness of the workpiece. Please take the measured data as the standard;
***: The working air pressure and the surface roughness of the workpiece in the usage scenario may have different degrees of impact on the life-time. Please configure Rochu control Unit. Do not exceed the safe air pressure.

DACModule
(Direct-through)

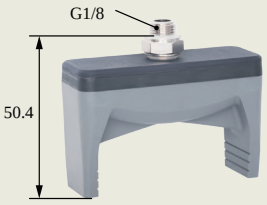

DASModule
(Precise Positioning Direct-through)



DALModule
(Side-through)

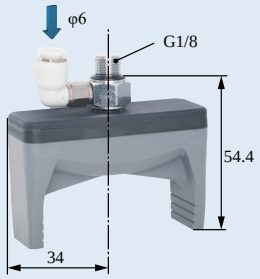

DAMModule
(Precise Positioning Multiple-through)

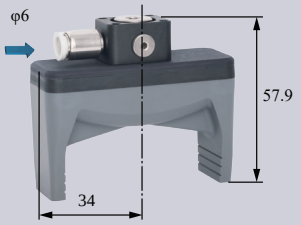

DAC
Rigid Connection Installation

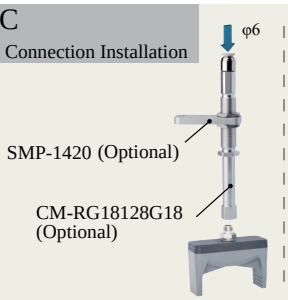

DAC
Buffer Installation

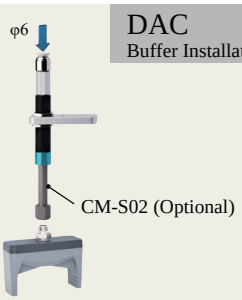

DAS
Matrix Installation

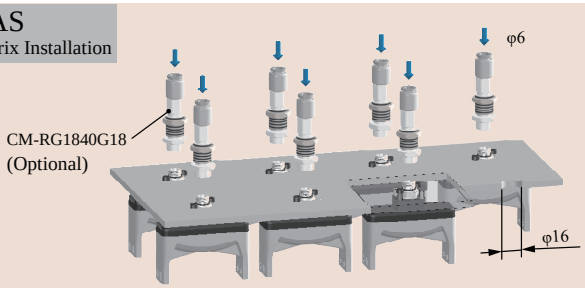

DAC Scara Scara Robot Arm Installation

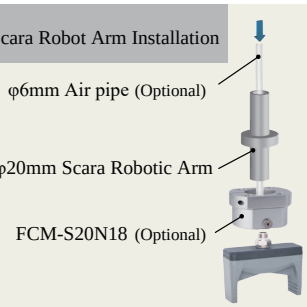

DAL
Robot Arm Flange Side-through Installation

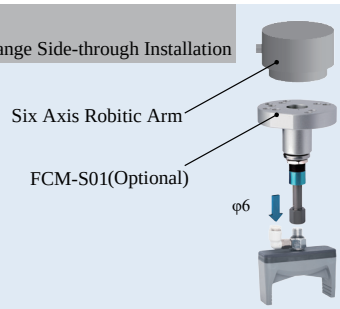

DAS Detection

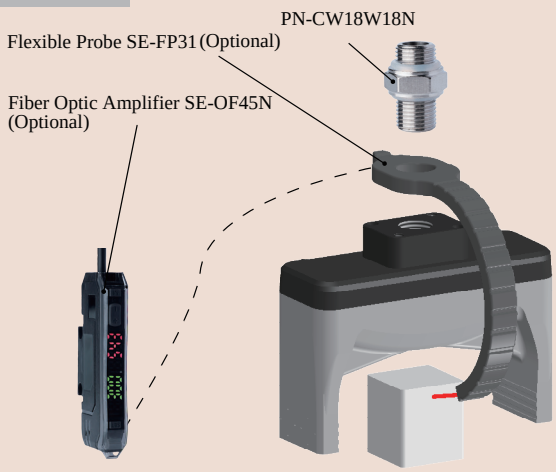

DAM Precise Positioning + Detection

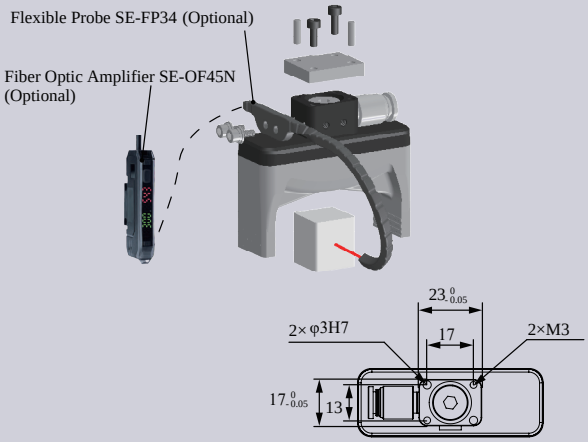

DAS Precise Positioning and Direct-through Installation

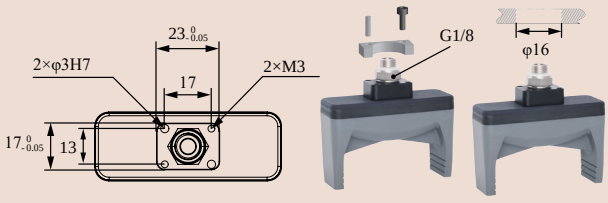

DAC-2GN2257[H]/SN Direct-through H Type	DAS-2GN2257[H]/SN Direct-through Precision Positioning H Type	DAL-2GN2257[H]/SN Side-through H Type	DAM-2GN2257[H]/SN Multi-way Precision Positioning H Type
DAC-2GN2257[HAS]/SN Direct-through Dust-free H Type	DAS-2GN2257[HAS]/SN Direct-through Precision Positioning Dust-free H Type	DAL-2GN2257[HAS]/SN Side-through Dust-free H Type	DAM-2GN2257[HAS]/SN Multi-way Precision Positioning Dust-free H Type
			
38g	45.2g	51.4g	49.4g

- Suitable for complex-shaped workpieces. Profiling nails, designed to fit the workpiece's shape, are installed via soft grippers' fingertip screw holes. They can be made of rigid materials like plastic or metal, depending on the workpiece.
- Fingertips open under pressure state and clamp in a vacuum. Inner fingertips distance G can be adjusted by working pressure.It is suggested to be used with Rochu control unit.
- When soft grippers contact workpieces,especially those with dust-prevention needs,or miniature,lightweight and easily-adsorbable ones,choose dust-free material [HAS] preferentially.

Scan to watch videos



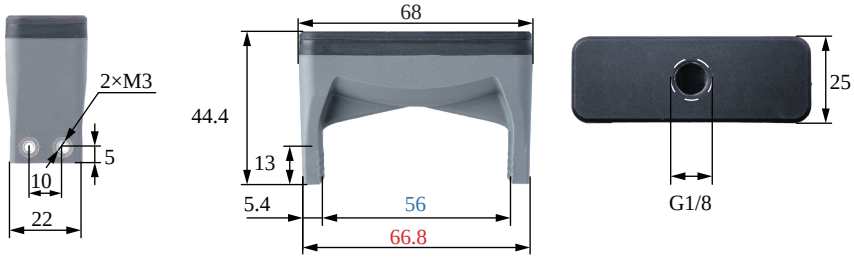

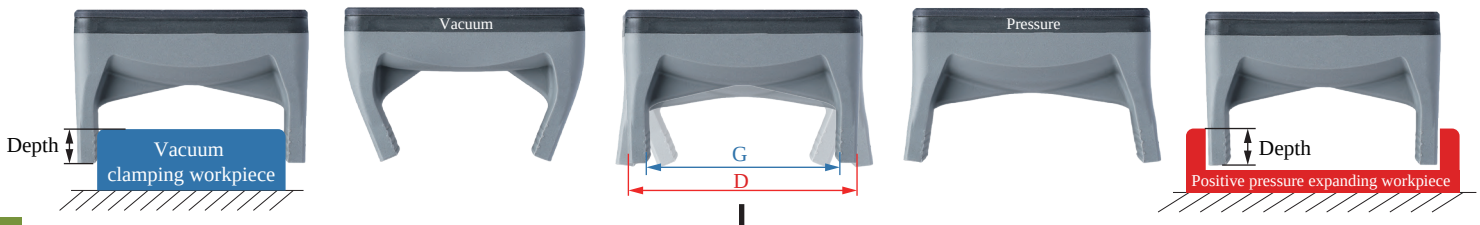

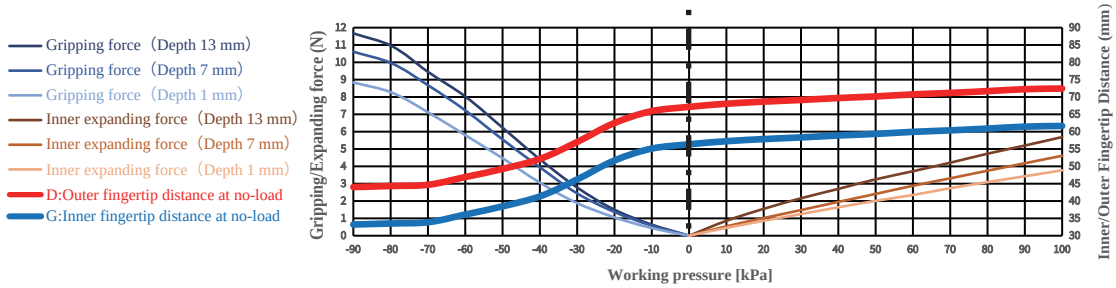

Gripping range	38-59mm	Gripping force	0-11.7N	Theoretical gripping load**	0-467g	Ideal gripping workpiece size*	56mm
Internal gripping range	60-70mm	Internal gripping force	0-5.7N	Theoretical internal gripping load**	0-228g	Ideal internal gripping workpiece size*	67mm
Joint size	G1/8	Life time***	1.5 million times	Contact Temperature	<220°C	Safe pressure***	<100kPa

DACModule
(Direct-through)

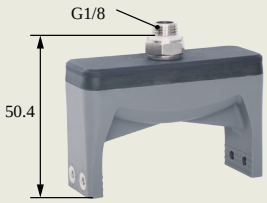

DASModule
(Precise Positioning Direct-through)



DALModule
(Side-through)

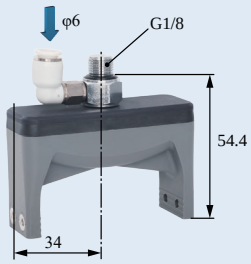

DAMModule
(Precise Positioning Multiple-through)

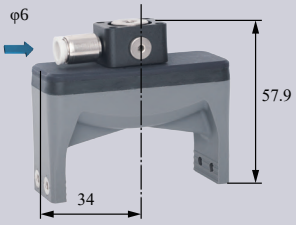

DAC
Rigid Connection Installation

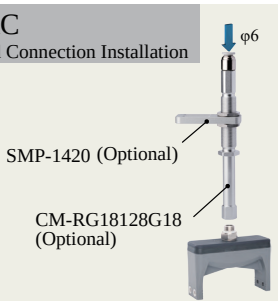

DAC
Buffer Installation

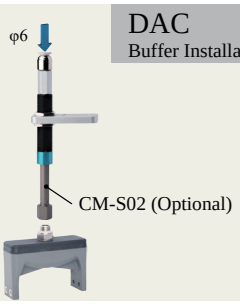

DAS
Matrix Installation

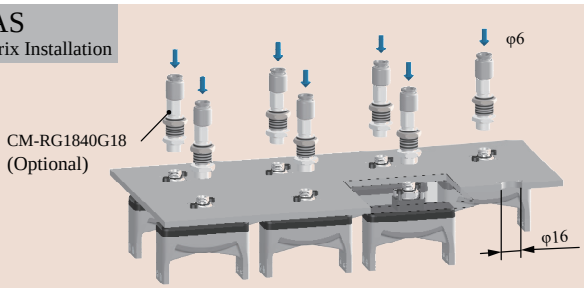

DAC Scara Scara Robot Arm Installation

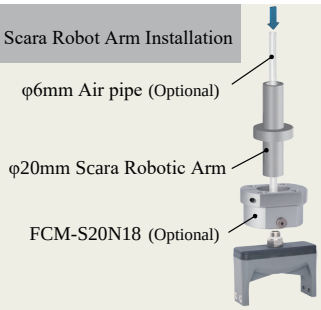

DAS Precise Positioning and Direct-through Installation

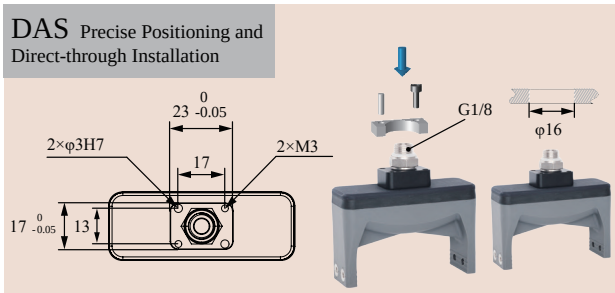

GPC Protective Installation



DAL
Robot Arm Flange Side-through Installation

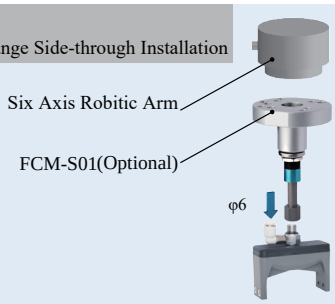

DAS Detection + Profile Block Installation

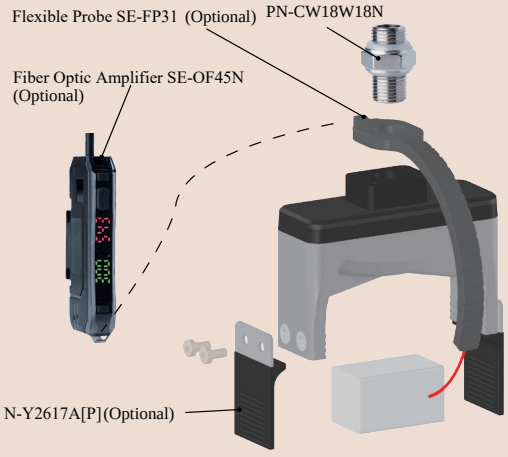

DAM Precise Positioning + Detection + Profile Block Installation

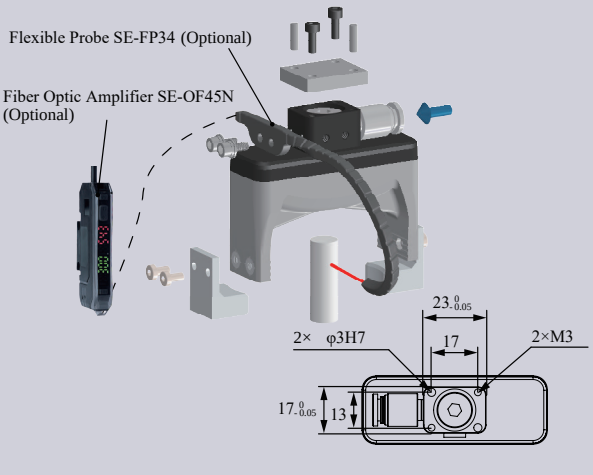

DAC-2GN4067[H]/SN Direct-through H Type	DAS-2GN4067[H]/SN Direct-through Precision Positioning H Type	DAM-2GN4067[H]/SN Side-through H Type
DAC-2GN4067[HAS]/SN Direct-through Dust-free H Type	DAS-2GN4067[HAS]/SN Direct-through Precision Positioning H Type	DAM-2GN4067[HAS]/SN Side-through Dust-free H Type
	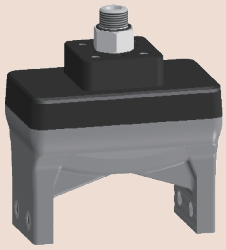	
Weight 87.3g	Weight 137.6g	Weight 154.8g

Scan to watch videos

Product features

- Suitable for complex-shaped workpieces. Profiling nails, designed to fit the workpiece's shape, are installed via soft grippers' fingertip screw holes. They can be made of rigid materials like plastic or metal, depending on the workpiece.
- Fingertips open under pressure state and clamp in a vacuum. Inner fingertips distance G can be adjusted by working pressure.It is suggested to be used with Rochu control unit.
- When soft grippers contact workpieces,especially those with dust-prevention needs,or miniature,lightweight and easily-adsorbable ones,choose dust-free material [HAS] preferentially.

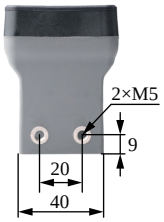

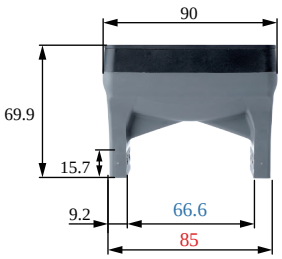

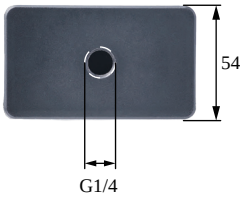

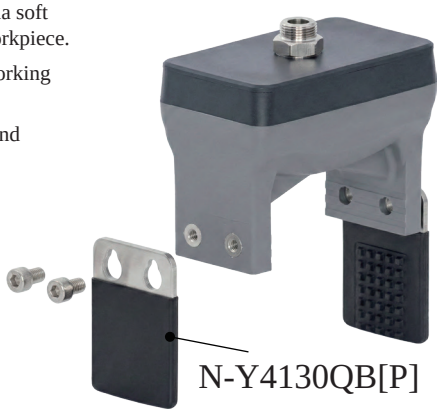

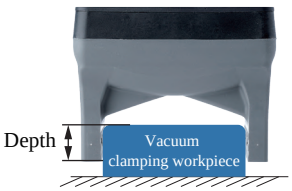







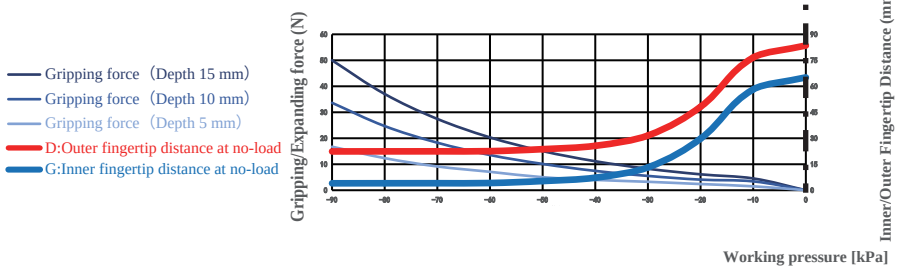

The clamping/inner-supporting force data of this product are measured based on the ideal workpiece size.
When the workpiece size deviates from the ideal value, the clamping/inner-supporting force decreases linearly.
If the workpiece size exceeds the clamping range or inner-supporting range, the clamping/inner-supporting force drops to 0.

Paremeter

Gripping range	10-70mm	Gripping force	0-50N	Theoretical gripping load**	0-2000g	Ideal gripping workpiece size*	66.0mm
Internal gripping range	—	Internal gripping force	—	Theoretical internal gripping load**	—	Ideal internal gripping workpiece size*	—
Joint size	G1/4	Life time***	1.5 million times	Contact Temperature	<220℃	Safe pressure***	Use under single negative pressure

*: The width of the cuboid that generates the maximum gripping force (two-finger gripping), the outer diameter of the cylinder (multi-finger gripping), the width of the square hole (two-finger internal gripping), or the inner diameter of the circular hole (multi-finger internal gripping);
**: Only the theoretical load of the ideal workpiece under standard working conditions is marked for reference and comparison. The real load capacity is also affected by factors such as the surface structure and roughness of the workpiece. Please take the measured data as the standard;
***: The working air pressure and the surface roughness of the workpiece in the usage scenario may have different degrees of impact on the life-time. Please configure Rochu control Unit. Do not exceed the safe air pressure.

DACModule
(Direct-through)

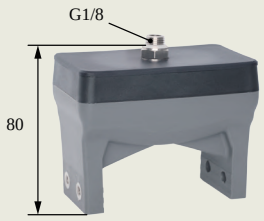

DASModule
(Precise Positioning Direct-through)

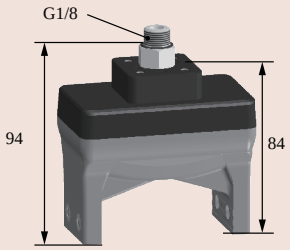

DALModule
(Side-through)

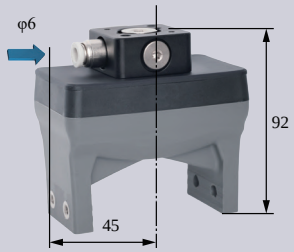

DAC
Rigid Connection Installation

DAC
Buffer Installation

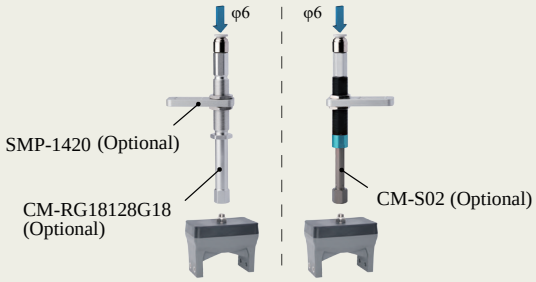

DAS Detection + Profile Block Installation

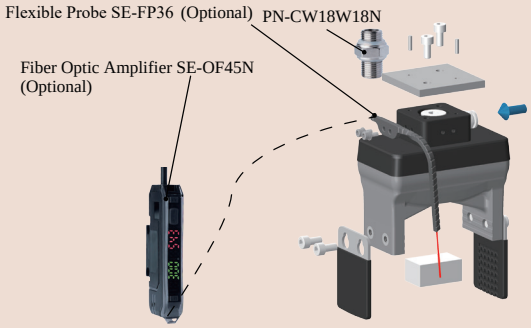

DAS
Matrix Installation

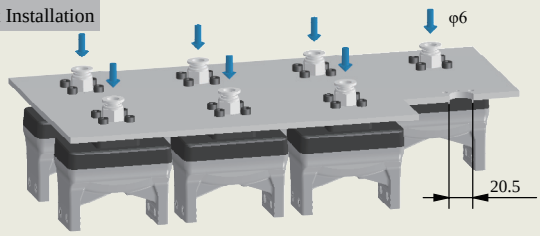

DAS Precise Positioning and Direct-through Installation

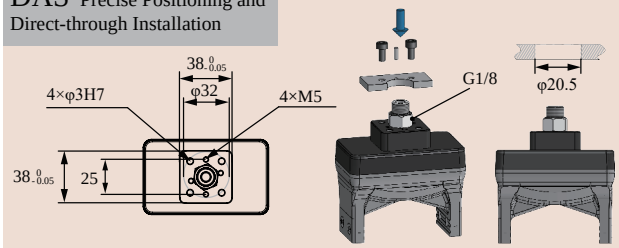

GPC Protective Installation



DAM Precise Positioning + Detection + Profile Block Installation

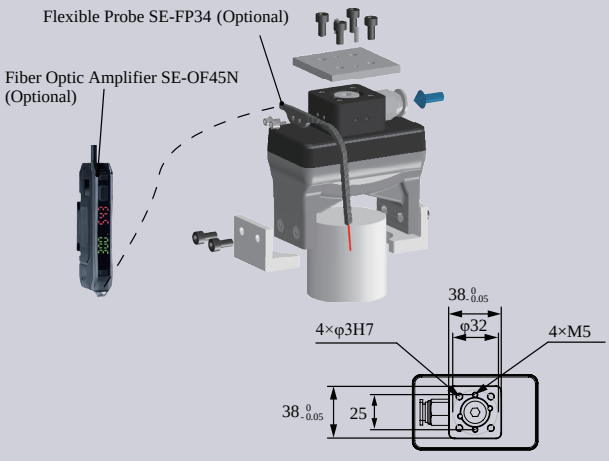

	DAC-2GN4087[H]/M Direct-through H Type		DAL-2GN4087[H]/M Side-through H Type	
	DAC-2GN4087[HAS]/M Direct-through Dust-free H Type		DAL-2GN4087[HAS]/M Side-through Dust-free H Type	
	Weight	461.8g	**Weight**	459.2g

Product features

- Suitable for complex-shaped workpieces. Profiling nails, designed to fit the workpiece's shape, are installed via soft grippers' fingertip screw holes. They can be made of rigid materials like plastic or metal, depending on the workpiece.
- Fingertips open under pressure state and clamp in a vacuum. Inner fingertips distance G can be adjusted by working pressure.It is suggested to be used with Rochu control unit.
- When soft grippers contact workpieces,especially those with dust-prevention needs,or miniature,lightweight and easily-adsorbable ones,choose dust-free material [HAS] preferentially.



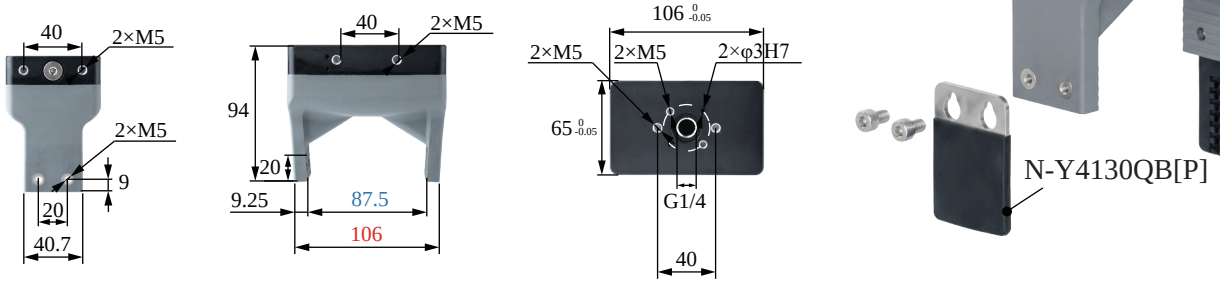

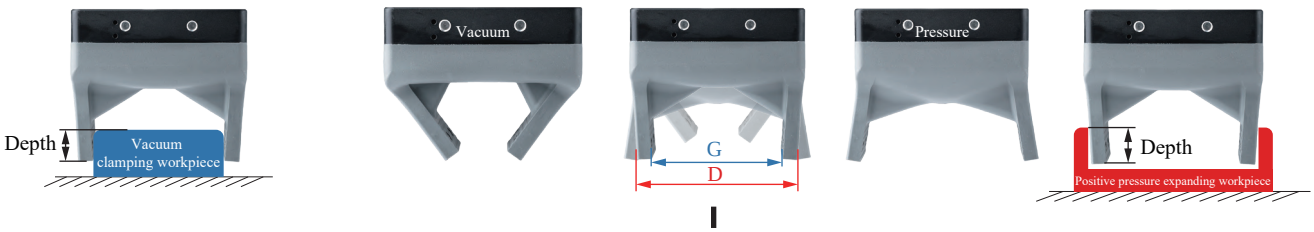

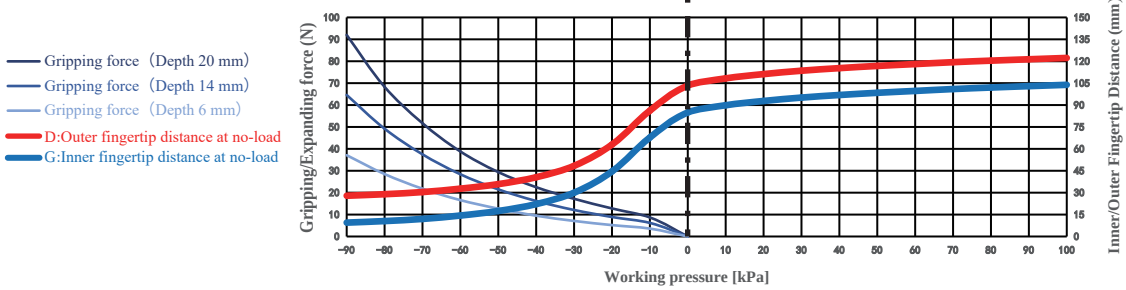

The clamping/inner-supporting force data of this product are measured based on the ideal workpiece size.
When the workpiece size deviates from the ideal value, the clamping/inner-supporting force decreases linearly.
If the workpiece size exceeds the clamping range or inner-supporting range, the clamping/inner-supporting force drops to 0.

Paremeter

Gripping range	15-100mm	Gripping force	0-92N	Theoretical gripping load**	0-3680g	Ideal gripping workpiece size*	80mm
Internal gripping range	—	Internal gripping force	—	Theoretical internal gripping load**	—	Ideal internal gripping workpiece size*	—
Joint size	G1/4	Life time***	1.5 million times	Contact Temperature	<220°C	Safe pressure***	<100kPa

*: The width of the cuboid that generates the maximum gripping force (two-finger gripping), the outer diameter of the cylinder (multi-finger gripping), the width of the square hole (two-finger internal gripping), or the inner diameter of the circular hole (multi-finger internal gripping);
**: Only the theoretical load of the ideal workpiece under standard working conditions is marked for reference and comparison. The real load capacity is also affected by factors such as the surface structure and roughness of the workpiece. Please take the measured data as the standard;
***: The working air pressure and the surface roughness of the workpiece in the usage scenario may have different degrees of impact on the life-time. Please configure Rochu control Unit. Do not exceed the safe air pressure.

DAC Straight Fitting Installation

Scan to watch videos

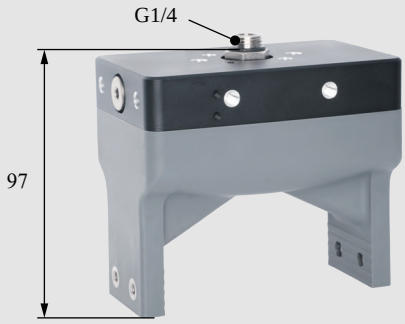

DAL Side Fitting Installation

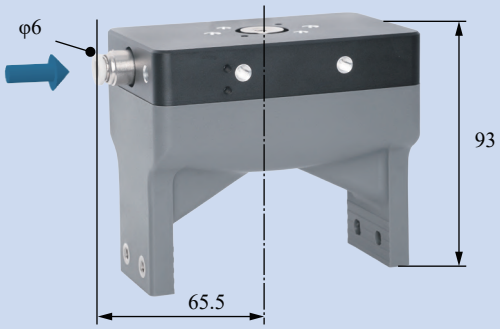

Robot Arm Flange Side-through Installation

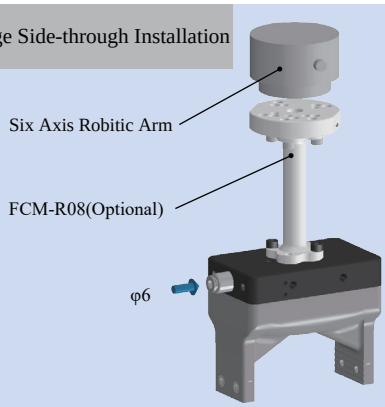

Detection + Profile Block Installation

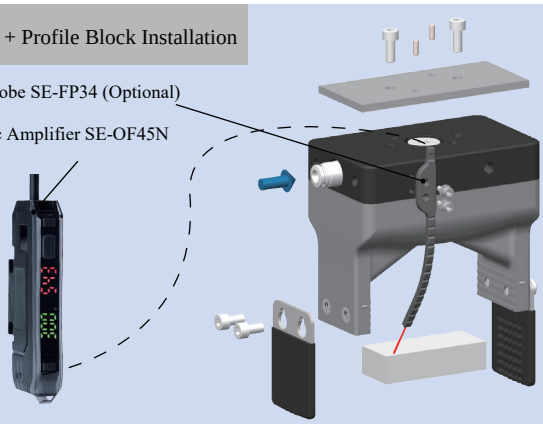

Precise Positioning Installation

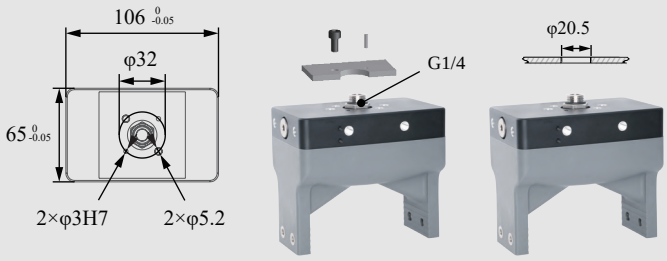

Matrix Installation

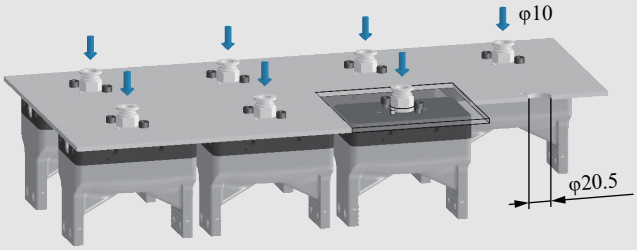

GPC Protective Installation



Side-through Partition Plate Installation

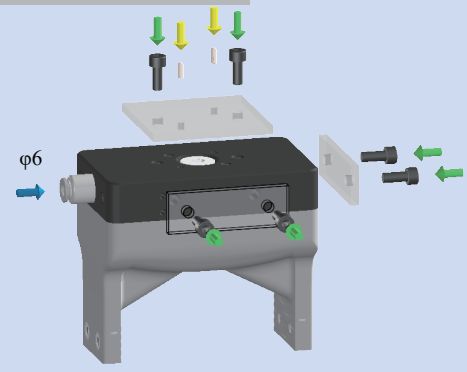

B-2GN4087[H]/M



DAC-3A07[H]/S Direct-through H Type	DAL-3A07[H]]/S Side-through H Type
DAC-3A07[HAS]/S Direct-through Dust-free H Type	DAL-3A07[HAS]/S Side-through Dust-free H Type



Weight	1g	Weight	15g

Product features

- Fingertip open under pressure and clamped in a vacuum. Fingertip distance G can be adjusted by working pressure.It is suggested to be used with Rochu control unit.
- Soft beak material is divided into Normal Material [H] and Dust-free Normal Material [HAS]. When the workpiece is light, or very soft, easy to adhere to adsorp on the soft beak, Dust-free Normal Material [HAS] is preferred.

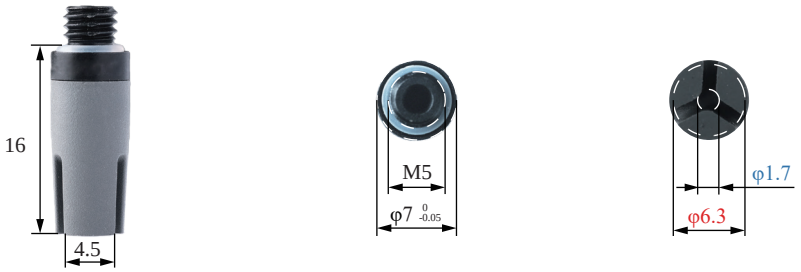



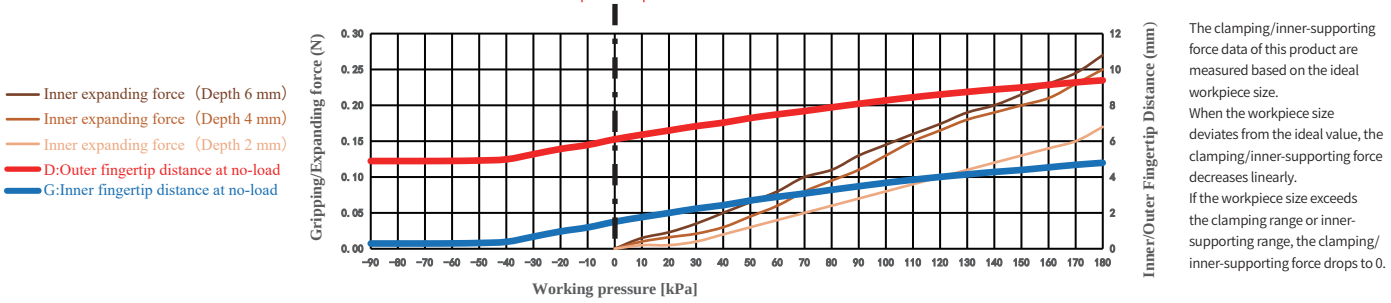

The clamping/inner-supporting force data of this product are measured based on the ideal workpiece size.
When the workpiece size deviates from the ideal value, the clamping/inner-supporting force decreases linearly.
If the workpiece size exceeds the clamping range or inner-supporting range, the clamping/inner-supporting force drops to 0.

Paremeter

Gripping range	—	Gripping force	—	Theoretical gripping load**	—	Ideal gripping workpiece size*	—
Internal gripping range	6-9mm	Internal gripping force	0-0.3N	Theoretical internal gripping load**	0-20g	Ideal internal gripping workpiece size*	8mm
Joint size	M5	Life time***	1.5 million times	Contact Temperature	<220°C	Safe pressure***	<180kPa

*: The width of the cuboid that generates the maximum gripping force (two-finger gripping), the outer diameter of the cylinder (multi-finger gripping), the width of the square hole (two-finger internal gripping), or the inner diameter of the circular hole (multi-finger internal gripping);
**: Only the theoretical load of the ideal workpiece under standard working conditions is marked for reference and comparison. The real load capacity is also affected by factors such as the surface structure and roughness of the workpiece. Please take the measured data as the standard;
***: The working air pressure and the surface roughness of the workpiece in the usage scenario may have different degrees of impact on the life-time. Please configure Rochu control Unit. Do not exceed the safe air pressure.

DAC Straight Fitting Installation

Scan to watch videos



DAL Side Fitting Installation

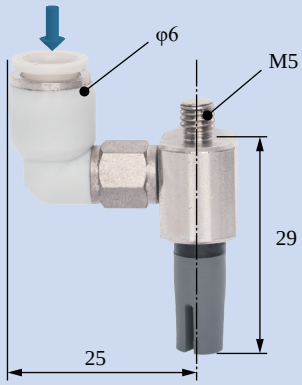

Scara Robotic Arm Installation

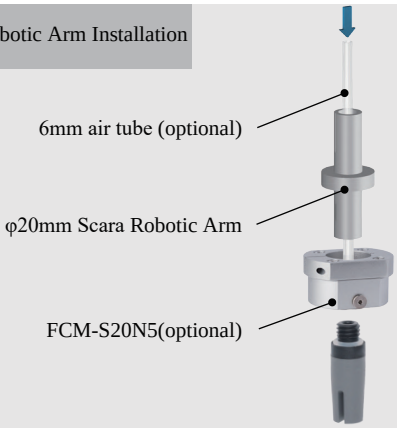

Robotic Arm Flange Side Fitting Installation

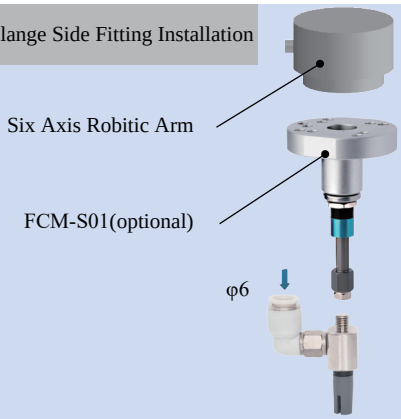

Rigid Connection Installation

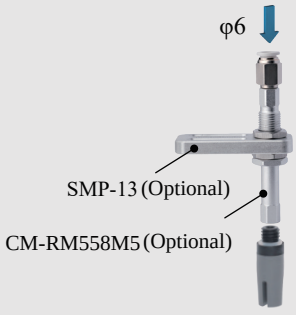

Buffer Installation



Matrix Installation

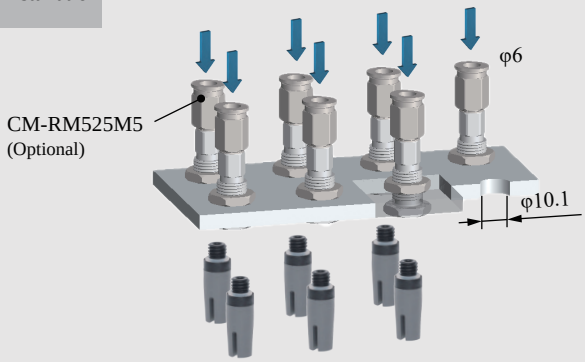

Precise Positioning Installation

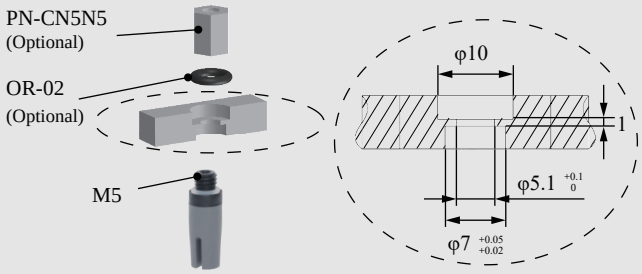

Installation of Optical Fiber Sensors

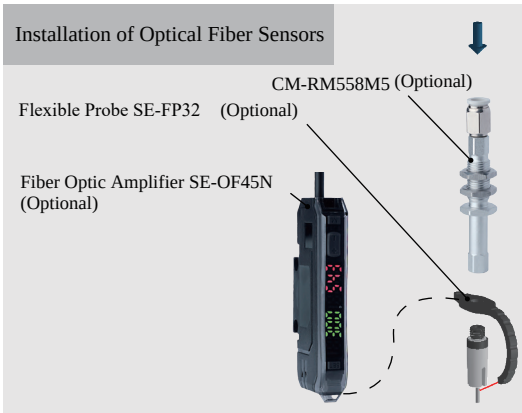

B-3A07[H]/S



DAC-3A07[LH]/S Direct-through Anti-static H Type	DAL-3A07[LH]]/S Side-through Anti-static H Type
DAC-3A07[LHAS]/S Direct-through Anti-static Dust-free H Type	DAL-3A07[LHAS]/S Side-through Anti-static Dust-free H Type



Weight	1g	Weight	15g

Product features

- Fingertip open under pressure and clamped in a vacuum. Fingertip distance G can be adjusted by working pressure.It is suggested to be used with Rochu control unit.
- Soft beak material is divided into Normal Material [LH] and Dust-free Normal Material [LHAS]. When the workpiece is light, or very soft, easy to adhere to adsorp on the soft beak, Dust-free Normal Material [LHAS] is preferred.



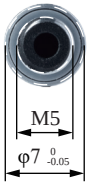

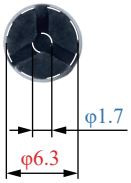









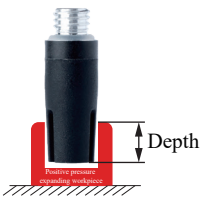

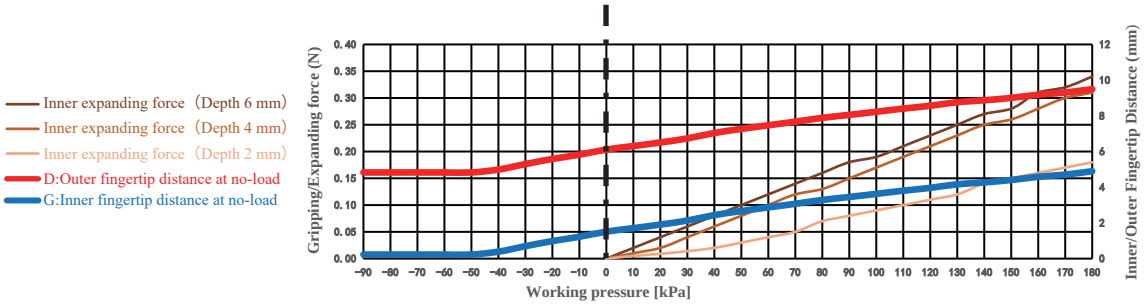

The clamping/inner-supporting force data of this product are measured based on the ideal workpiece size.
When the workpiece size deviates from the ideal value, the clamping/inner-supporting force decreases linearly.
If the workpiece size exceeds the clamping range or inner-supporting range, the clamping/inner-supporting force drops to 0.

Paremeter

Gripping range	—	Gripping force	—	Theoretical gripping load**	—	Ideal gripping workpiece size*	—
Internal gripping range	6-9mm	Internal gripping force	0-0.3N	Theoretical internal gripping load**	0-26g	Ideal internal gripping workpiece size*	8mm
Joint size	M5	Life time***	1.5 million times	Contact Temperature	<220℃	Safe pressure***	<180kPa

*: The width of the cuboid that generates the maximum gripping force (two-finger gripping), the outer diameter of the cylinder (multi-finger gripping), the width of the square hole (two-finger internal gripping), or the inner diameter of the circular hole (multi-finger internal gripping);
**: Only the theoretical load of the ideal workpiece under standard working conditions is marked for reference and comparison. The real load capacity is also affected by factors such as the surface structure and roughness of the workpiece. Please take the measured data as the standard;
***: The working air pressure and the surface roughness of the workpiece in the usage scenario may have different degrees of impact on the life-time. Please configure Rochu control Unit. Do not exceed the safe air pressure.

DAC Straight Fitting Installation

Scan to watch videos



DAL Side Fitting Installation

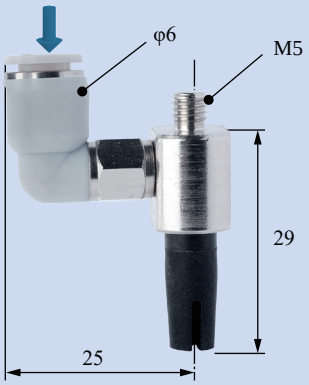

Scara Robotic Arm Installation



Robotic Arm Flange Side Fitting Installation

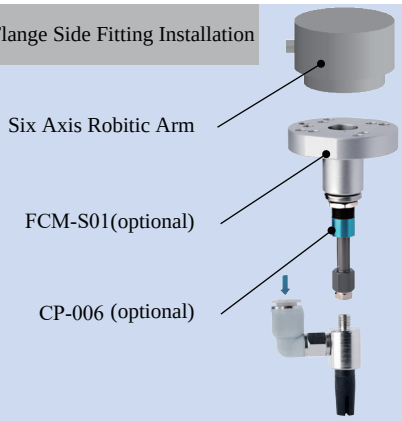

Rigid Connection Installation

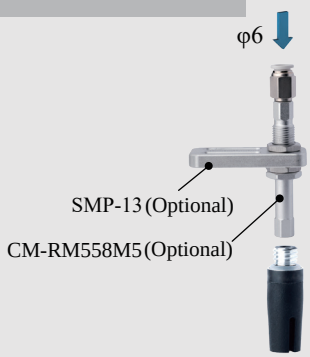

Buffer Installation



Matrix Installation

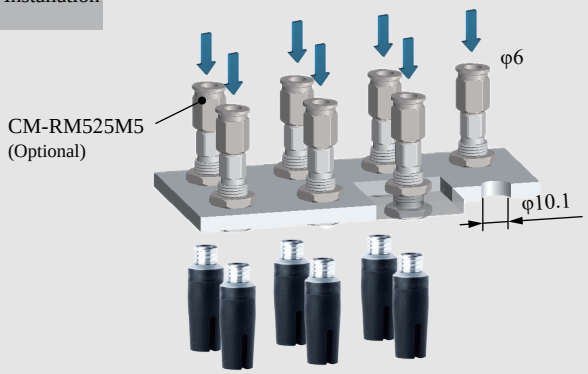

Precise Positioning Installation

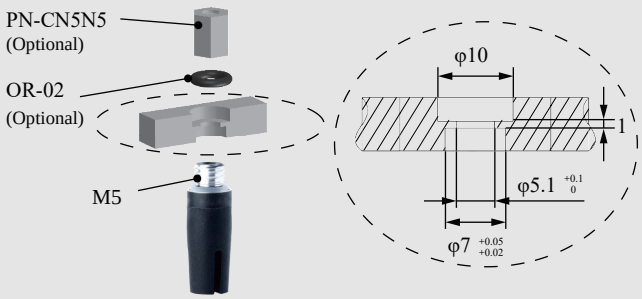

Installation of Optical Fiber Sensors

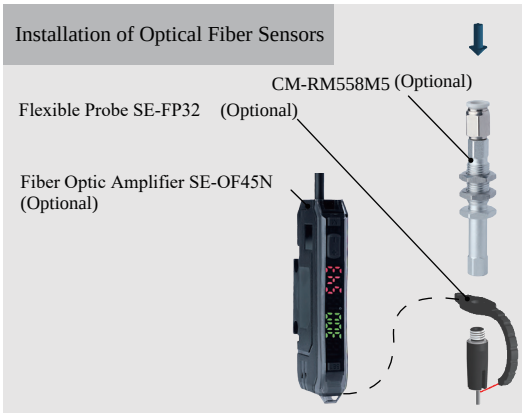

	DAC-3A07[HH]/S Direct-through Oil-resistant		DAL-3A07[HH]]/S Side Fitting Oil-resistant Material	
	**Weight**	1g	**Weight**	15g



Product features

- Fingertip open under pressure and clamped in a vacuum. Fingertip distance D can be adjusted by working pressure.It is suggested to be used with Rochu control unit.
- The material of [HH] has good abrasion resistance and oil resistance. It can be in contact with workpieces containing heavy oil (such as lubricating oil, gear oil, hydraulic oil, etc.) for a long time, and can be applied in the metal processing industry.



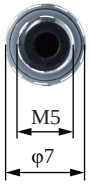

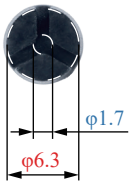









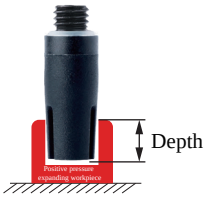

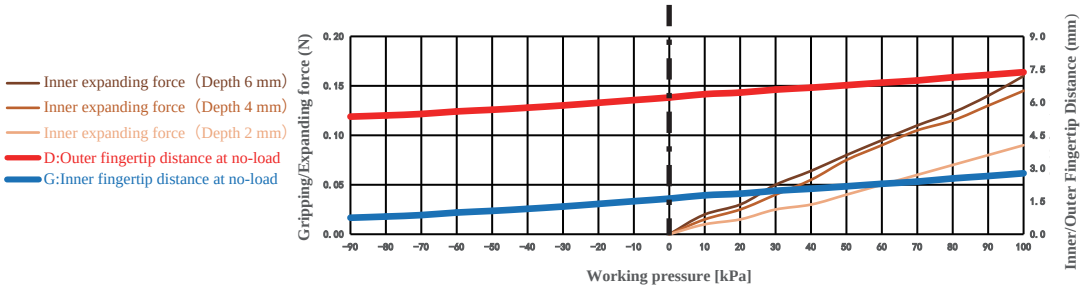

The clamping/inner-supporting force data of this product are measured based on the ideal workpiece size.
When the workpiece size deviates from the ideal value, the clamping/inner-supporting force decreases linearly.
If the workpiece size exceeds the clamping range or inner-supporting range, the clamping/inner-supporting force drops to 0.

Paremeter

Gripping range	—	Gripping force	—	Theoretical gripping load**	—	Ideal gripping workpiece size*	—
Internal gripping range	5.5-7.2mm	Internal gripping force	0-0.2N	Theoretical internal gripping load**	0-12g	Ideal internal gripping workpiece size*	6.3mm
Joint size	M5	Life time***	1.5 million times	Contact Temperature	<180℃	Safe pressure***	<100kPa

*: The width of the cuboid that generates the maximum gripping force (two-finger gripping), the outer diameter of the cylinder (multi-finger gripping), the width of the square hole (two-finger internal gripping), or the inner diameter of the circular hole (multi-finger internal gripping);
**: Only the theoretical load of the ideal workpiece under standard working conditions is marked for reference and comparison. The real load capacity is also affected by factors such as the surface structure and roughness of the workpiece. Please take the measured data as the standard;
***: The working air pressure and the surface roughness of the workpiece in the usage scenario may have different degrees of impact on the life-time. Please configure Rochu control Unit. Do not exceed the safe air pressure.

DAC Straight Fitting Installation



DAL Side Fitting Installation

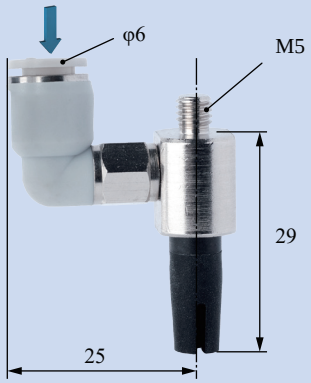

Scara Robotic Arm Installation

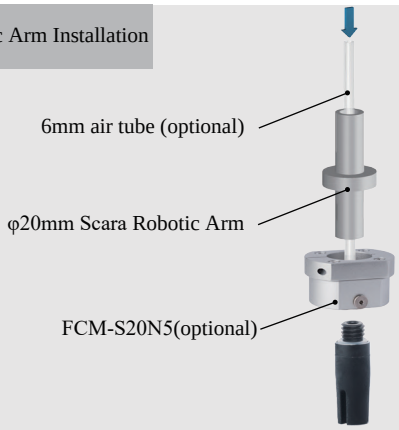

Robotic Arm Flange Side Fitting Installation

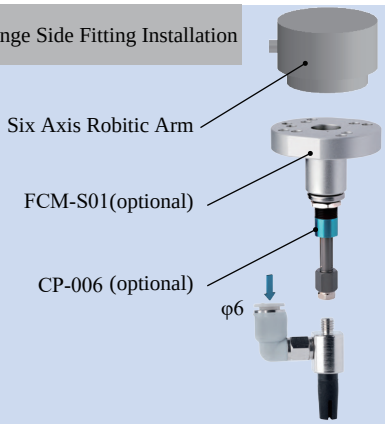

Rigid Connection Installation

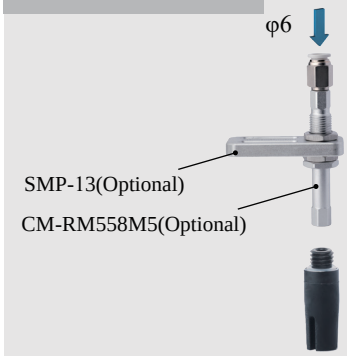

Buffer Installation



Matrix Installation

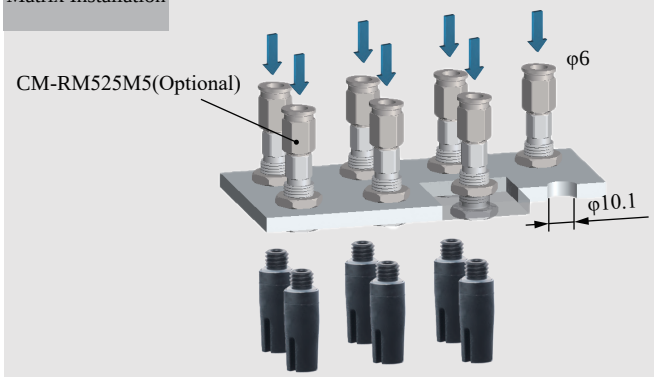

Precise Positioning Installation

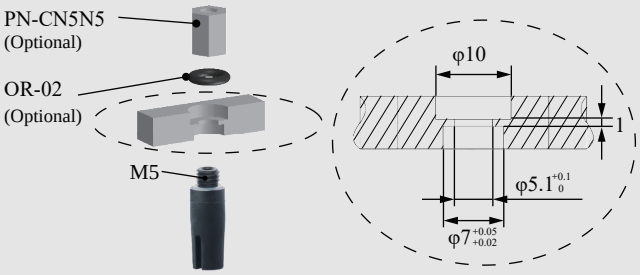

Installation of Optical Fiber Sensors

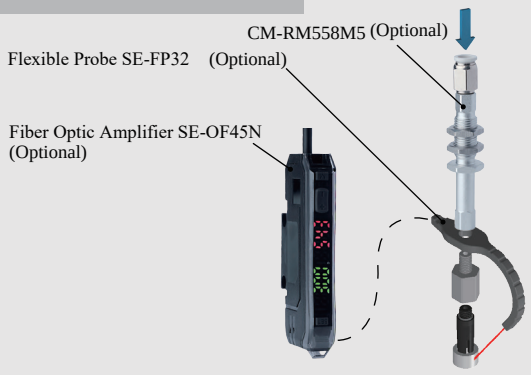



DAC-3B08[H]/S Direct-through H Type	DAL-3B08[H]/S Side-through H Type
DAC-3B08[HAS]/S Direct-through Dust-free H Type	DAL-3B08[HAS]/S Side-through Dust-free H Type



Weight	1g	Weight	16.1g

Product features

- Fingertip open under pressure and clamped in a vacuum. Inner fingertips distance D can be adjusted by working pressure.It is suggested to be used with Rochu control unit.
- Soft beak material is divided into Normal Material [H] and Dust-free Normal Material [HAS]. When the workpiece is light, or very soft, easy to adhere to adsorp on the soft beak, Dust-free Normal Material [HAS] is preferred.
- Food-grade material, direct food contact approved.

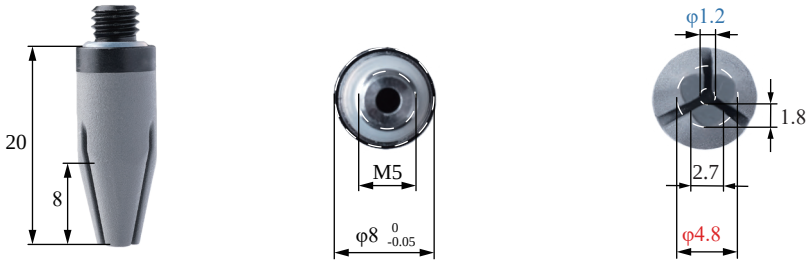



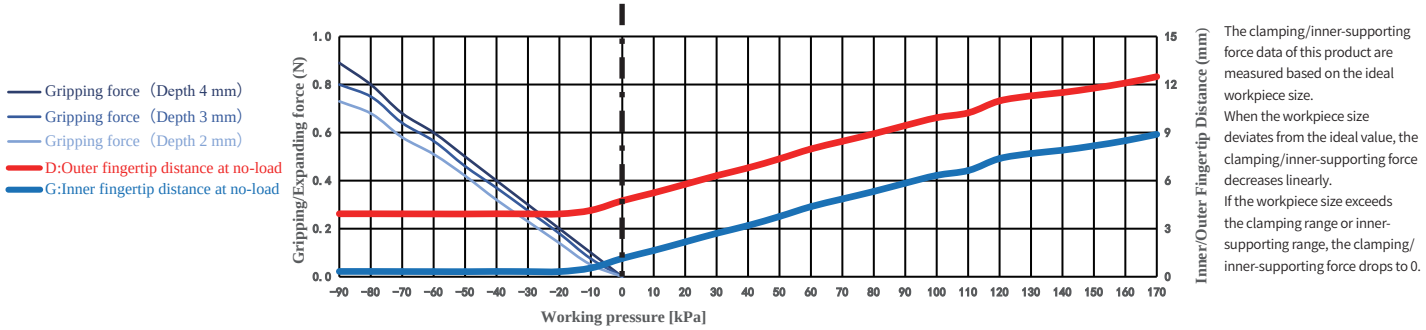

The clamping/inner-supporting force data of this product are measured based on the ideal workpiece size.
When the workpiece size deviates from the ideal value, the clamping/inner-supporting force decreases linearly.
If the workpiece size exceeds the clamping range or inner-supporting range, the clamping/inner-supporting force drops to 0.

Paremeter

Gripping range	0.5-2mm	Gripping force	0-0.9N	Theoretical gripping load**	0-67g	Ideal gripping workpiece size*	1.2mm
Internal gripping range	—	Internal gripping force	—	Theoretical internal gripping load**	—	Ideal internal gripping workpiece size*	—
Joint size	M5	Life time***	1.5 million times	Contact Temperature	<220°C	Safe pressure***	<170kPa

*: The width of the cuboid that generates the maximum gripping force (two-finger gripping), the outer diameter of the cylinder (multi-finger gripping), the width of the square hole (two-finger internal gripping), or the inner diameter of the circular hole (multi-finger internal gripping);
**: Only the theoretical load of the ideal workpiece under standard working conditions is marked for reference and comparison. The real load capacity is also affected by factors such as the surface structure and roughness of the workpiece. Please take the measured data as the standard;
***: The working air pressure and the surface roughness of the workpiece in the usage scenario may have different degrees of impact on the life-time. Please configure Rochu control Unit. Do not exceed the safe air pressure.

DAC Straight Fitting Installation

Scan to watch videos

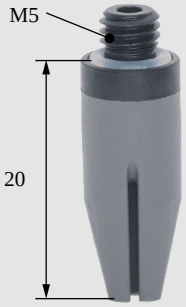

DAL Side Fitting Installation

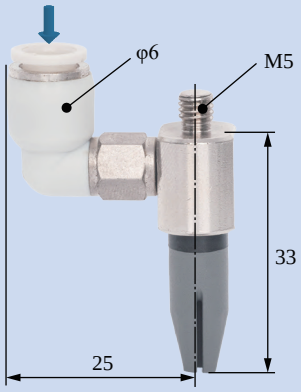

Scara Robotic Arm Installation

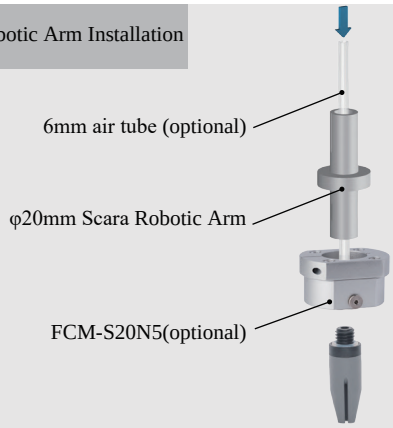

Robotic Arm Flange Side Fitting Installation

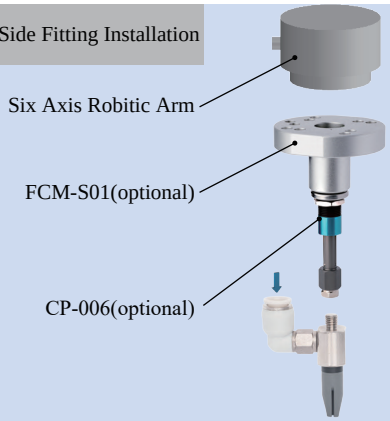

Rigid Connection Installation

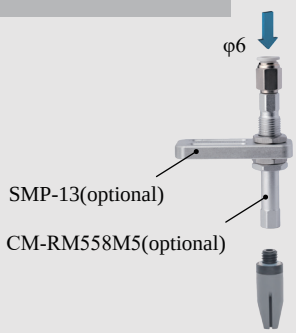

Buffer Installation



Matrix Installation

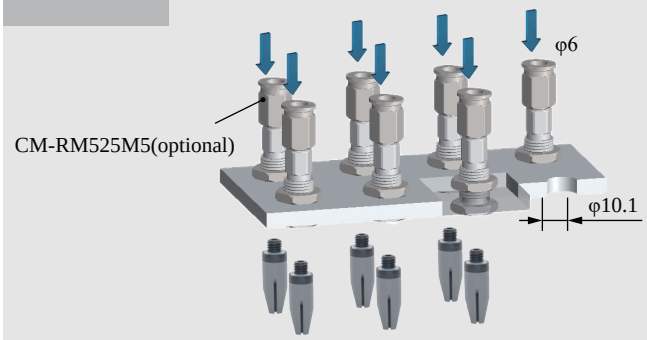

Precise Positioning Installation

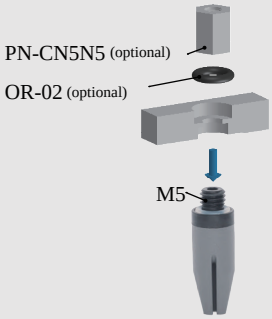

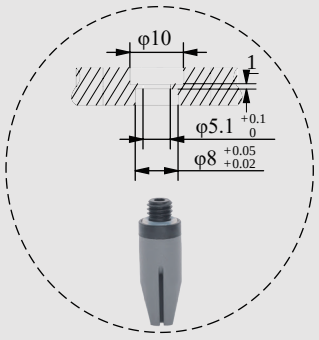

Installation of Optical Fiber Sensors

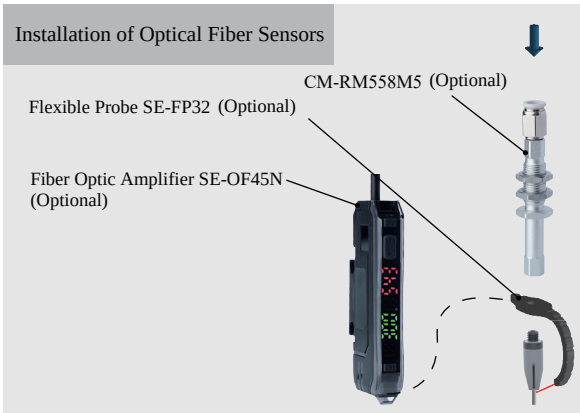



DAC-3B08[LH]/S Direct-through Anti-static H Type		DAL-3B08[LH]/S Side-through Anti-static H Type	
DAC-3B08[LHAS]/S Direct-through Anti-static Dust-free H Type		DAL-3B08[LHAS]/S Side-through Anti-static Dust-free H Type	
Weight	1g	**Weight**	16.1g



Product features

- Fingertip open under pressure and clamped in a vacuum. Fingertip distance G can be adjusted by working pressure.It is suggested to be used with Rochu control unit.
- Anti-static material meets the national standard GB/T11210-2014, point-to-point resistance 0.1-1000MΩ requirements. When the workpiece is light, or very soft, easy to adhere to adsorp on the soft beak, anti-static dust-free traceless material [LHAS] is preferred.

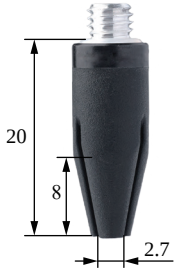

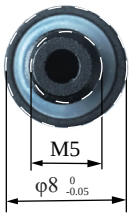

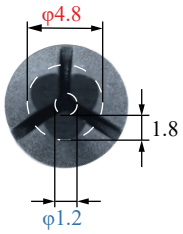

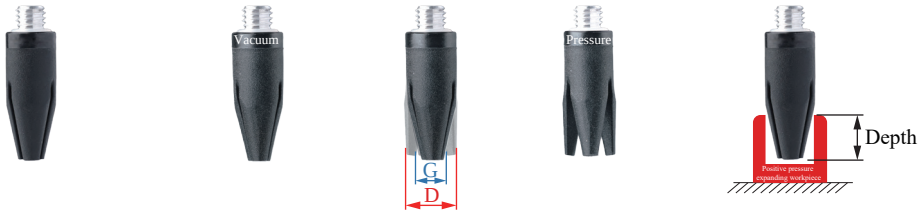

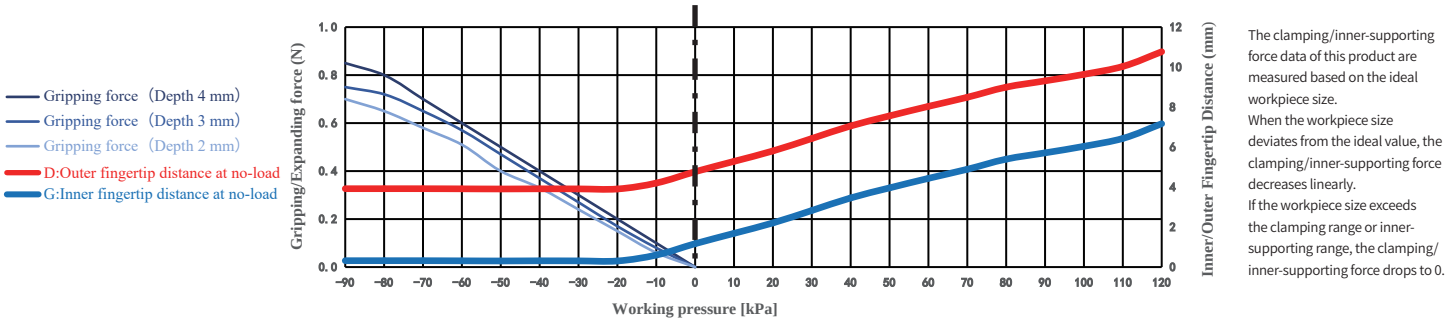

The clamping/inner-supporting force data of this product are measured based on the ideal workpiece size.
When the workpiece size deviates from the ideal value, the clamping/inner-supporting force decreases linearly.
If the workpiece size exceeds the clamping range or inner-supporting range, the clamping/inner-supporting force drops to 0.

Paremeter

Gripping range	0.5-2mm	Gripping force	0-0.9N	Theoretical gripping load**	0-64g	Ideal gripping workpiece size*	1.2mm
Internal gripping range	—	Internal gripping force	—	Theoretical internal gripping load**	—	Ideal internal gripping workpiece size*	—
Joint size	M5	Life time***	1.5 million times	Contact Temperature	<220℃	Safe pressure***	<120kPa

*: The width of the cuboid that generates the maximum gripping force (two-finger gripping), the outer diameter of the cylinder (multi-finger gripping), the width of the square hole (two-finger internal gripping), or the inner diameter of the circular hole (multi-finger internal gripping);
**: Only the theoretical load of the ideal workpiece under standard working conditions is marked for reference and comparison. The real load capacity is also affected by factors such as the surface structure and roughness of the workpiece. Please take the measured data as the standard;
***: The working air pressure and the surface roughness of the workpiece in the usage scenario may have different degrees of impact on the life-time. Please configure Rochu control Unit. Do not exceed the safe air pressure.

DAC Straight Fitting Installation

Scan to watch videos



DAL Side Fitting Installation

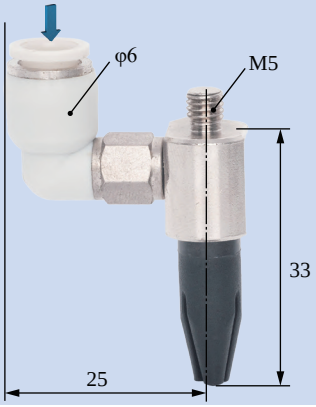

Scara Robotic Arm Installation

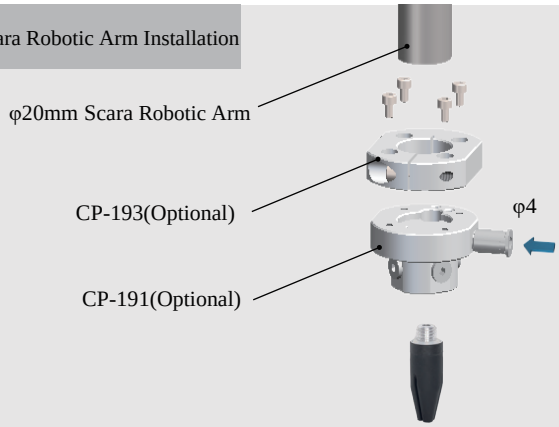

Robotic Arm Flange Side Fitting Installation

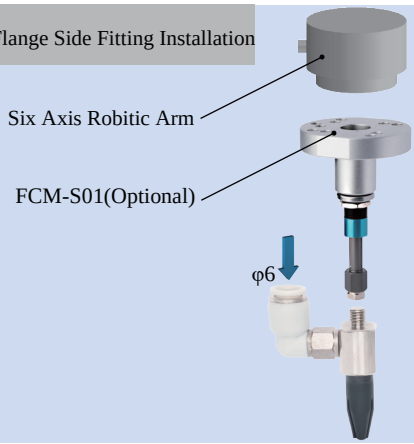

Rigid Connection Installation

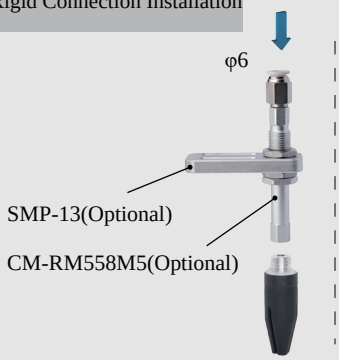

Buffer Installation



Matrix Installation

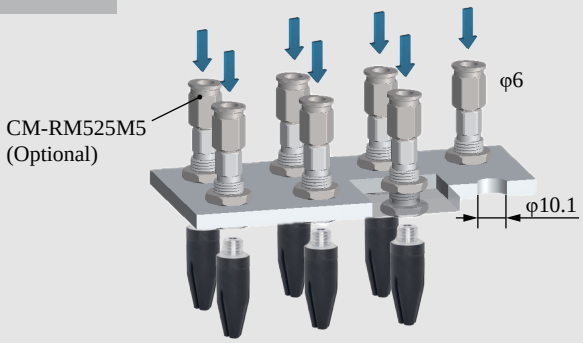

Precise Positioning Installation

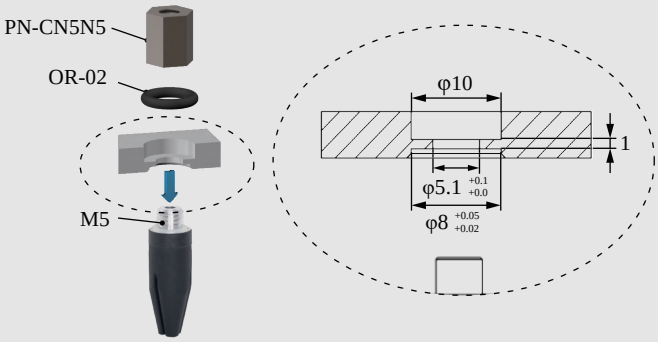

Installation of Optical Fiber Sensors

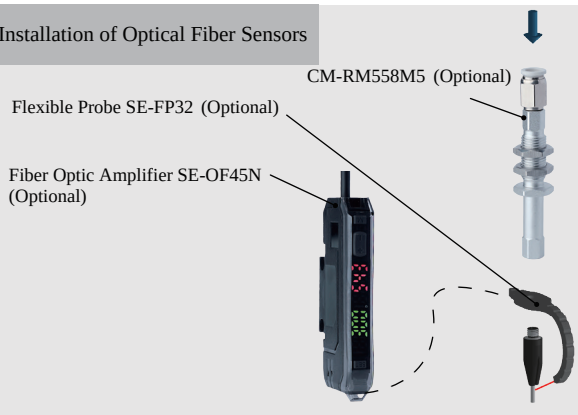

B-3B08[LH]/S



DAC-3B10[H]/S Direct-through H Type		DAL-3B10[H]/S Side-through H Type	
DAC-3B10[HAS]/S Direct-through Dust-free H Type		DAL-3B10[HAS]/S Side-through Dust-free H Type	
Weight	2.4g	**Weight**	17.5g



Product features

- Fingertip open under pressure and clamped in a vacuum. Inner fingertips distance D can be adjusted by working pressure.It is suggested to be used with Rochu control unit.
- Soft beak material is divided into Normal Material [H] and Dust-free Normal Material [HAS]. When the workpiece is light, or very soft, easy to adhere to adsorp on the soft beak, Dust-free Normal Material [HAS] is preferred.
- Food-grade material, direct food contact approved.

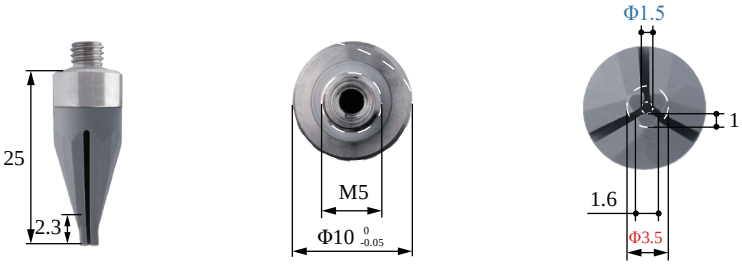



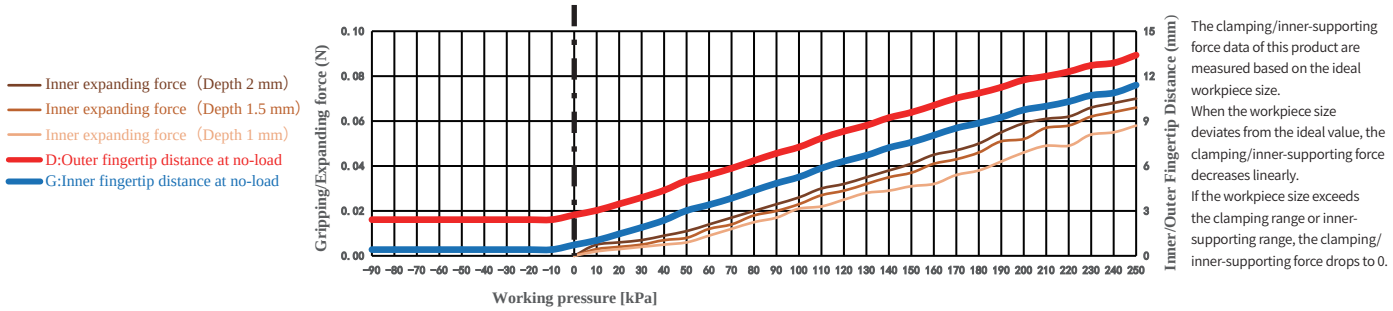

The clamping/inner-supporting force data of this product are measured based on the ideal workpiece size.
When the workpiece size deviates from the ideal value, the clamping/inner-supporting force decreases linearly.
If the workpiece size exceeds the clamping range or inner-supporting range, the clamping/inner-supporting force drops to 0.

Paremeter

Gripping range	—	Gripping force	—	Theoretical gripping load**	—	Ideal gripping workpiece size*	—
Internal gripping range	2.5-5mm	Internal gripping force	0-0.1N	Theoretical internal gripping load**	0-5g	Ideal internal gripping workpiece size*	4mm
Joint size	M5	Life time***	1.5 million times	Contact Temperature	<220℃	Safe pressure***	<250kPa

*: The width of the cuboid that generates the maximum gripping force (two-finger gripping), the outer diameter of the cylinder (multi-finger gripping), the width of the square hole (two-finger internal gripping), or the inner diameter of the circular hole (multi-finger internal gripping);
**: Only the theoretical load of the ideal workpiece under standard working conditions is marked for reference and comparison. The real load capacity is also affected by factors such as the surface structure and roughness of the workpiece. Please take the measured data as the standard;
***: The working air pressure and the surface roughness of the workpiece in the usage scenario may have different degrees of impact on the life-time. Please configure Rochu control Unit. Do not exceed the safe air pressure.

DAC Straight Fitting Installation

Scan to watch videos



DAL Side Fitting Installation

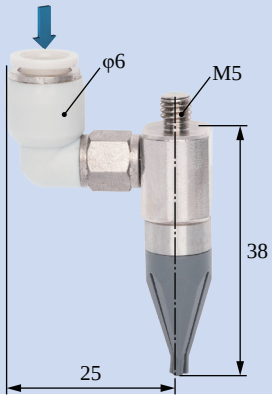

Scara Robotic Arm Installation

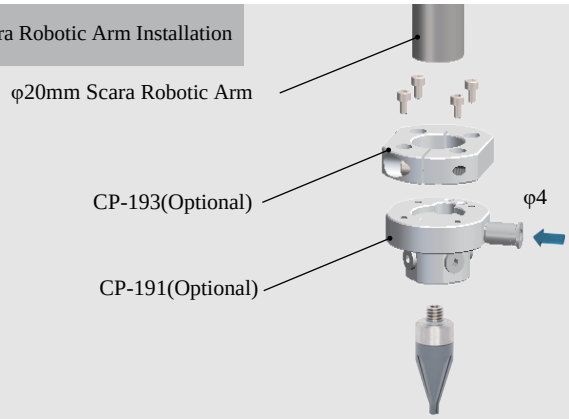

Robotic Arm Flange Side Fitting Installation

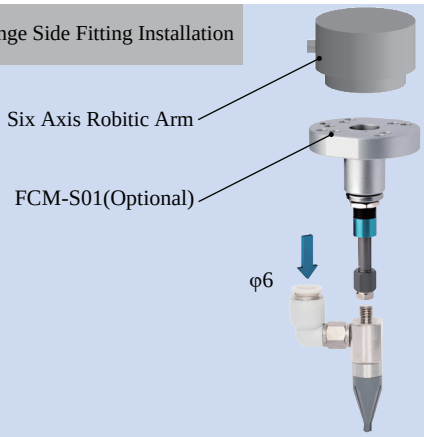

Rigid Connection Installation

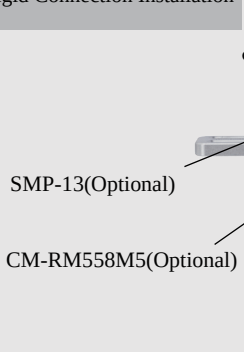

Buffer Installation



Matrix Installation

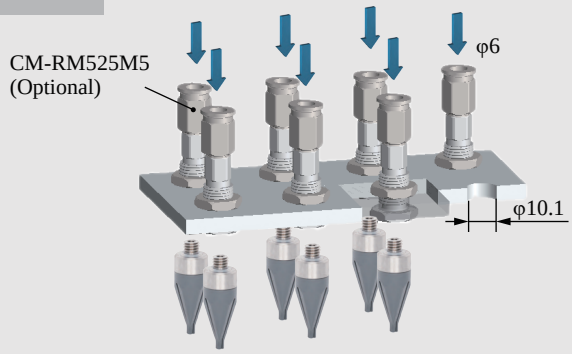

Precise Positioning Installation

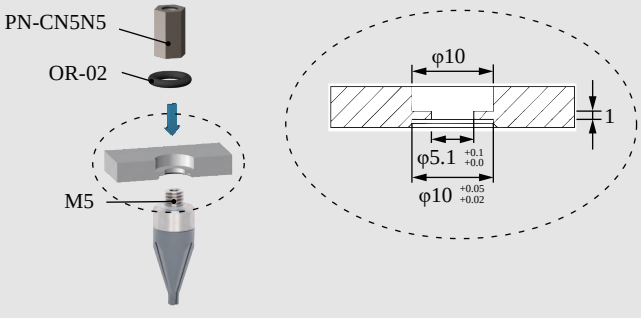

Installation of Optical Fiber Sensors

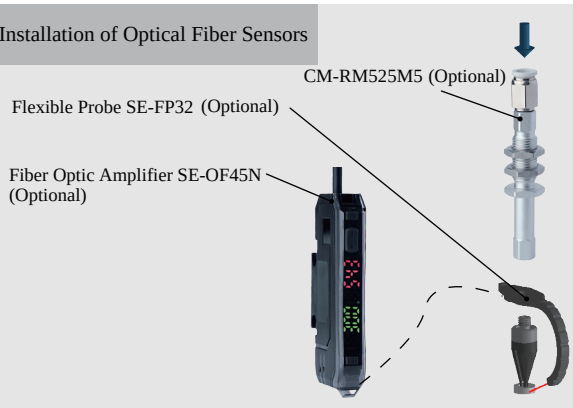



DAC-3B12[H]/S Direct-through H Type		DAL-3B12[H]/S Side-through H Type	
DAC-3B12[HAS]/S Direct-through Dust-free H Type		DAL-3B12[HAS]/S Side-through Dust-free H Type	
Weight	5.1g	**Weight**	16.6g



Product features

- Fingertip open under pressure and clamped in a vacuum. Inner fingertips distance D can be adjusted by working pressure.It is suggested to be used with Rochu control unit.
- Soft beak material is divided into Normal Material [H] and Dust-free Normal Material [HAS]. When the workpiece is light, or very soft, easy to adhere to adsorp on the soft beak, Dust-free Normal Material [HAS] is preferred.
- Food-grade material, direct food contact approved.

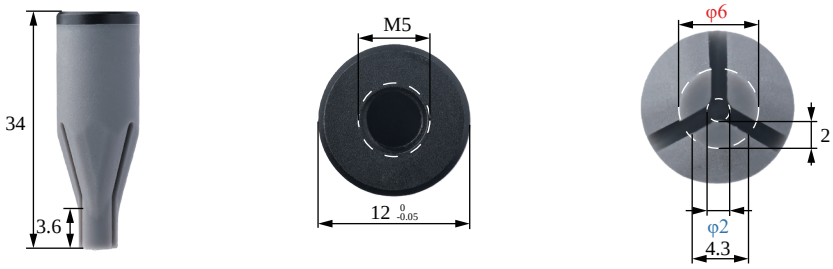



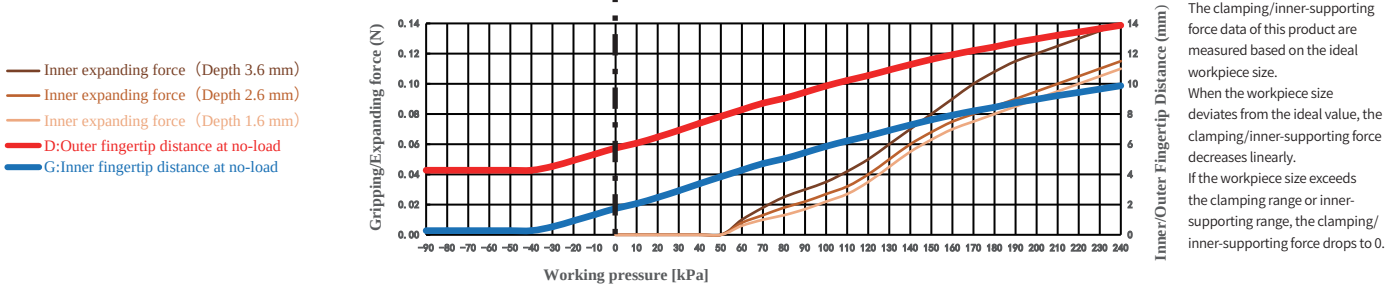

The clamping/inner-supporting force data of this product are measured based on the ideal workpiece size.
When the workpiece size deviates from the ideal value, the clamping/inner-supporting force decreases linearly.
If the workpiece size exceeds the clamping range or inner-supporting range, the clamping/inner-supporting force drops to 0.

Paremeter

Gripping range	—	Gripping force	—	Theoretical gripping load**	—	Ideal gripping workpiece size*	—
Internal gripping range	5.5-12mm	Internal gripping force	0-0.1N	Theoretical internal gripping load**	0-11g	Ideal internal gripping workpiece size*	8mm
Joint size	M5	Life time***	1.5 million times	Contact Temperature	<220°C	Safe pressure***	<240kPa

*: The width of the cuboid that generates the maximum gripping force (two-finger gripping), the outer diameter of the cylinder (multi-finger gripping), the width of the square hole (two-finger internal gripping), or the inner diameter of the circular hole (multi-finger internal gripping);
**: Only the theoretical load of the ideal workpiece under standard working conditions is marked for reference and comparison. The real load capacity is also affected by factors such as the surface structure and roughness of the workpiece. Please take the measured data as the standard;
***: The working air pressure and the surface roughness of the workpiece in the usage scenario may have different degrees of impact on the life-time. Please configure Rochu control Unit. Do not exceed the safe air pressure.

DAC Straight Fitting Installation

Scan to watch videos



DAL Side Fitting Installation

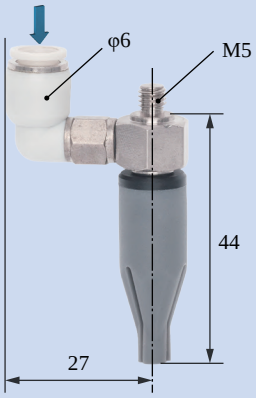

Scara Robotic Arm Installation

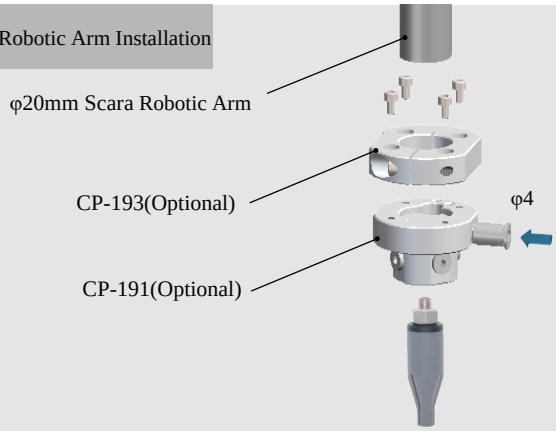

Robotic Arm Flange Side Fitting Installation

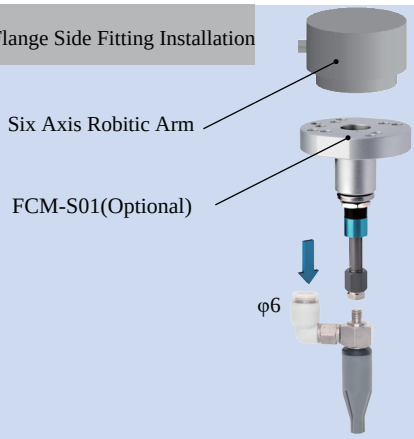

Rigid Connection Installation

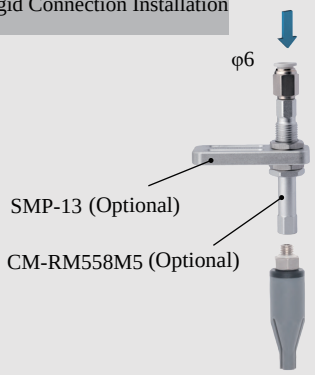

Buffer Installation

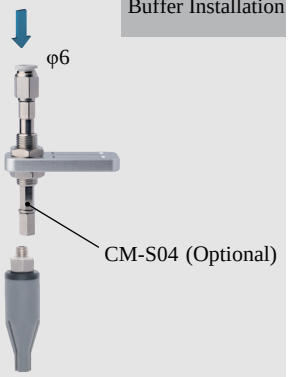

Matrix Installation

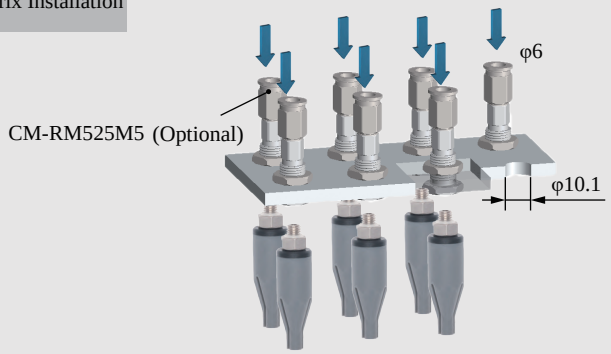

Precise Positioning Installation

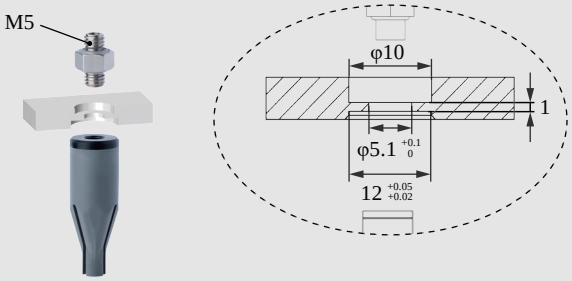

Installation of Optical Fiber Sensors



B-3B12[H]/S



DAC-3B12[LH]/S Direct-through Anti-static H Type		DAL-3B12[LH]/S Side-through Anti-static H Type	
DAC-3B12[LHAS]/S Direct-through Anti-static Dust-free H Type		DAL-3B12[LHAS]/S Side-through Anti-static Dust-free H Type	
Weight	4.9g	**Weight**	15.7g



Product features

- Fingertip open under pressure and clamped in a vacuum. Fingertip distance G can be adjusted by working pressure.It is suggested to be used with Rochu control unit.
- Anti-static material meets the national standard GB/T11210-2014, point-to-point resistance 0.1-1000MΩ requirements. When the workpiece is light, or very soft, easy to adhere to adsorp on the soft beak, anti-static dust-free traceless material [LHAS] is preferred.





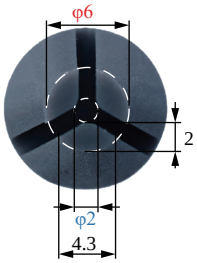



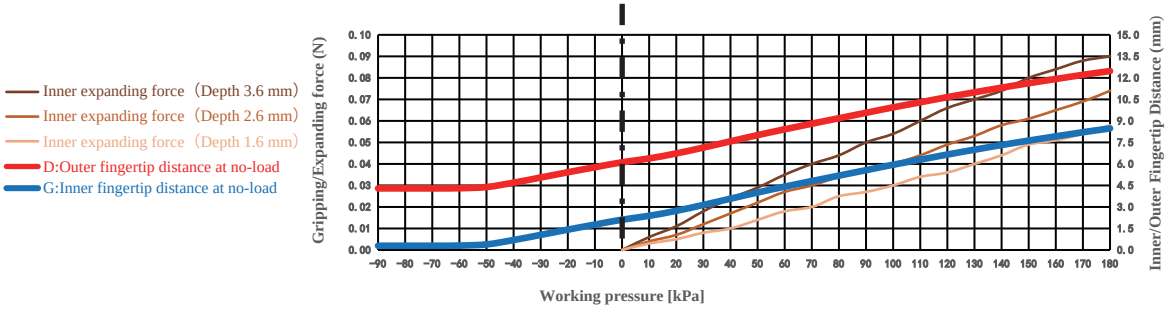

The clamping/inner-supporting force data of this product are measured based on the ideal workpiece size.
When the workpiece size deviates from the ideal value, the clamping/inner-supporting force decreases linearly.
If the workpiece size exceeds the clamping range or inner-supporting range, the clamping/inner-supporting force drops to 0.

Paremeter

Gripping range	—	Gripping force	—	Theoretical gripping load**	—	Ideal gripping workpiece size*	—
Internal gripping range	5.5-12mm	Internal gripping force	0-0.1N	Theoretical internal gripping load**	0-8g	Ideal internal gripping workpiece size*	8mm
Joint size	M5	Life time***	1.5 million times	Contact Temperature	<220℃	Safe pressure***	<180kPa

*: The width of the cuboid that generates the maximum gripping force (two-finger gripping), the outer diameter of the cylinder (multi-finger gripping), the width of the square hole (two-finger internal gripping), or the inner diameter of the circular hole (multi-finger internal gripping);
**: Only the theoretical load of the ideal workpiece under standard working conditions is marked for reference and comparison. The real load capacity is also affected by factors such as the surface structure and roughness of the workpiece. Please take the measured data as the standard;
***: The working air pressure and the surface roughness of the workpiece in the usage scenario may have different degrees of impact on the life-time. Please configure Rochu control Unit. Do not exceed the safe air pressure.

DAC Straight Fitting Installation



DAL Side Fitting Installation

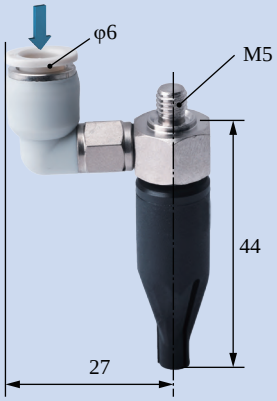

Scara Robotic Arm Installation

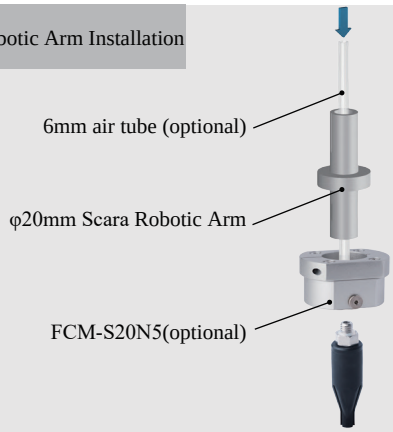

Robotic Arm Flange Side Fitting Installation

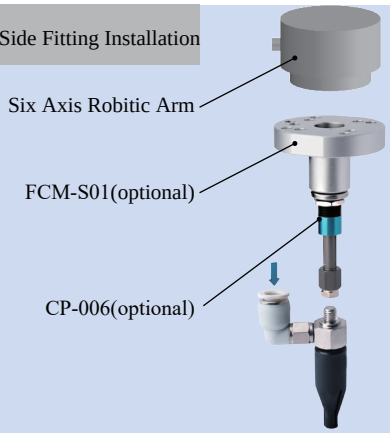

Rigid Connection Installation

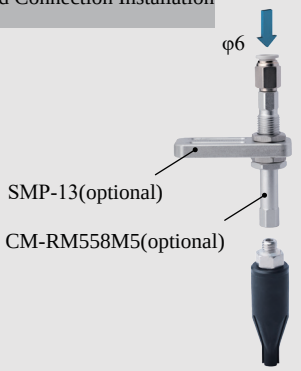

Buffer Installation



Matrix Installation

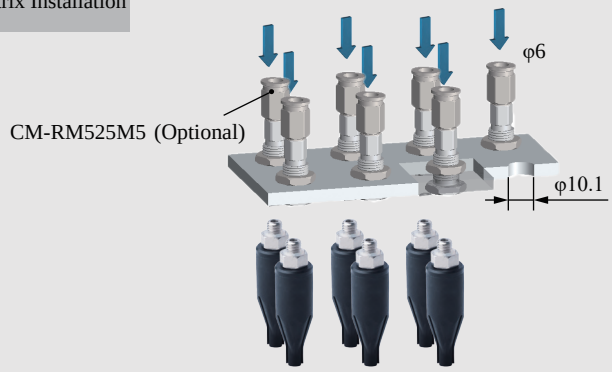

Precise Positioning Installation

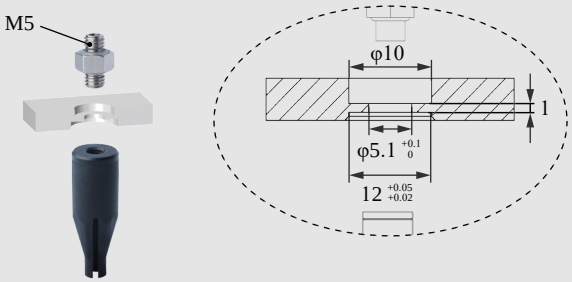

Installation of Optical Fiber Sensors

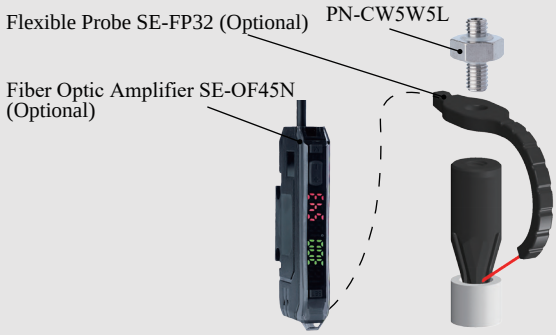



DAC-3C12[H]/S Direct-through H Type		DAL-3C12[H]/S Side-through H Type	
DAC-3C12[HAS]/S Direct-through Dust-free H Type		DAL-3C12[HAS]/S Side-through Dust-free H Type	
Weight	4g	**Weight**	15.5g



Product features

- Fingertip open under pressure and clamped in a vacuum. Inner fingertips distance D can be adjusted by working pressure.It is suggested to be used with Rochu control unit.
- Soft beak material is divided into Normal Material [H] and Dust-free Normal Material [HAS]. When the workpiece is light, or very soft, easy to adhere to adsorp on the soft beak, Dust-free Normal Material [HAS] is preferred.
- Food-grade material, direct food contact approved.

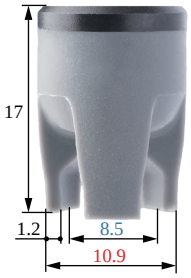



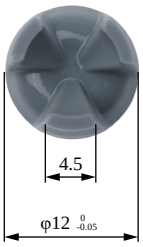

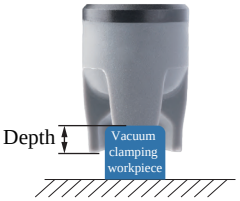









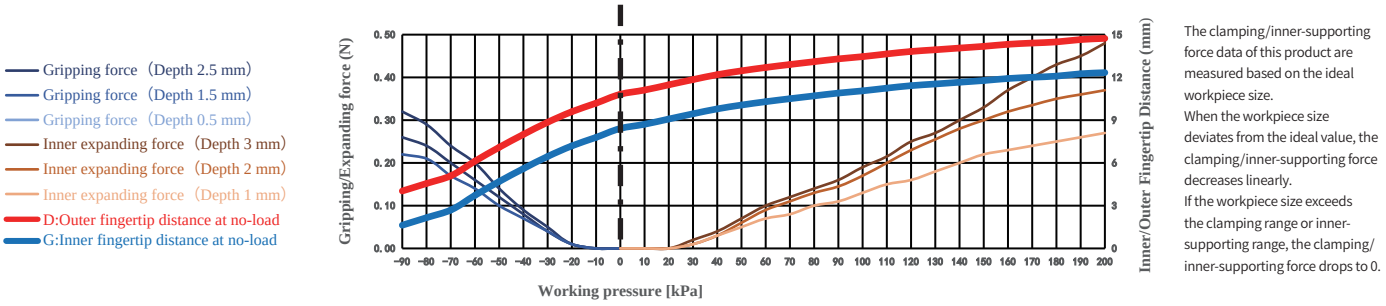

The clamping/inner-supporting force data of this product are measured based on the ideal workpiece size.
When the workpiece size deviates from the ideal value, the clamping/inner-supporting force decreases linearly.
If the workpiece size exceeds the clamping range or inner-supporting range, the clamping/inner-supporting force drops to 0.

Paremeter

Gripping range	4-11mm	Gripping force	0-0.3N	Theoretical gripping load**	0-24g	Ideal gripping workpiece size*	8mm
Internal gripping range	11-14mm	Internal gripping force	0-0.5N	Theoretical internal gripping load**	0-36g	Ideal internal gripping workpiece size*	12mm
Joint size	M5	Life time***	1.5 million times	Contact Temperature	<220℃	Safe pressure***	<200kPa

*: The width of the cuboid that generates the maximum gripping force (two-finger gripping), the outer diameter of the cylinder (multi-finger gripping), the width of the square hole (two-finger internal gripping), or the inner diameter of the circular hole (multi-finger internal gripping);
**: Only the theoretical load of the ideal workpiece under standard working conditions is marked for reference and comparison. The real load capacity is also affected by factors such as the surface structure and roughness of the workpiece. Please take the measured data as the standard;
***: The working air pressure and the surface roughness of the workpiece in the usage scenario may have different degrees of impact on the life-time. Please configure Rochu control Unit. Do not exceed the safe air pressure.

DAC Straight Fitting Installation

Scan to watch videos



DAL Side Fitting Installation

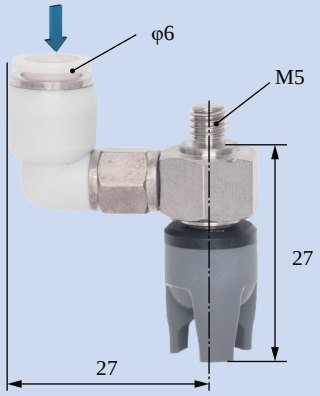

Scara Robotic Arm Installation

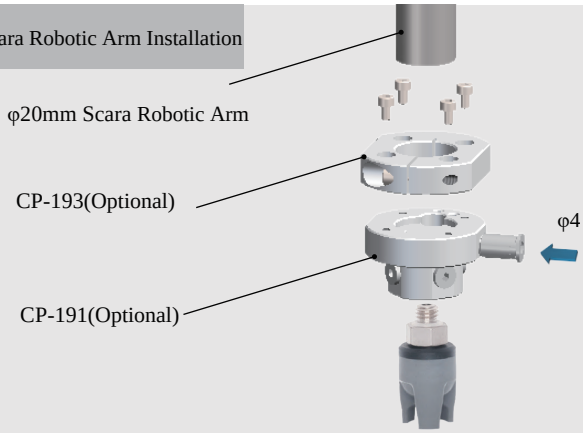

Robotic Arm Flange Side Fitting Installation

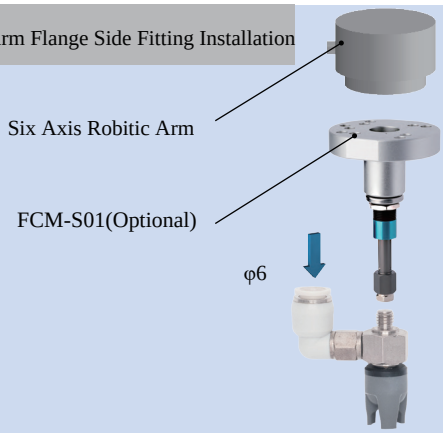

Rigid Connection Installation



Buffer Installation

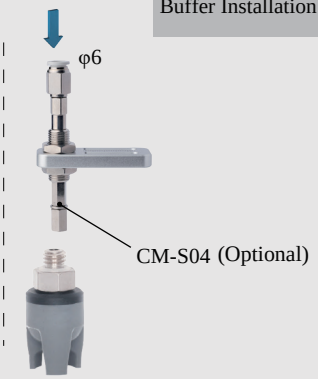

Matrix Installation

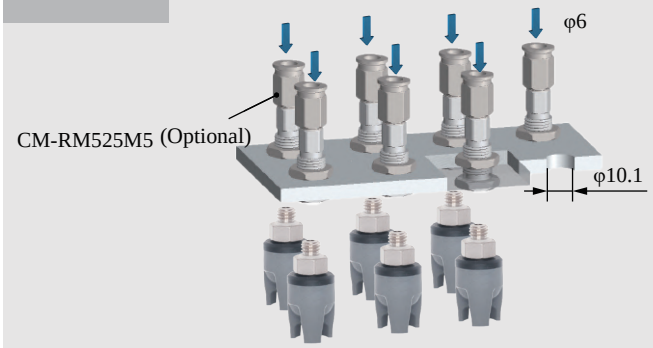

Precise Positioning Installation

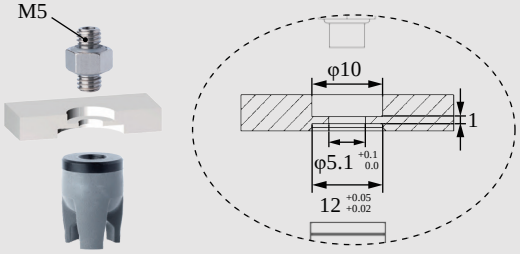

Installation of Optical Fiber Sensors



B-3C12[H]/S



DAC-3B13[H]/S Direct-through H Type		DAL-3B13[H]/S Side-through H Type	
DAC-3B13[HAS]/S Direct-through Dust-free H Type		DAL-3B13[HAS]/S Side-through Dust-free H Type	
Weight	4.9g	Weight	16.4g



- Fingertip open under pressure and clamped in a vacuum. Inner fingertips distance D can be adjusted by working pressure.It is suggested to be used with Rochu control unit.
- Soft beak material is divided into Normal Material [H] and Dust-free Normal Material [HAS]. When the workpiece is light, or very soft, easy to adhere to adsorp on the soft beak, Dust-free Normal Material [HAS] is preferred.
- Food-grade material, direct food contact approved.

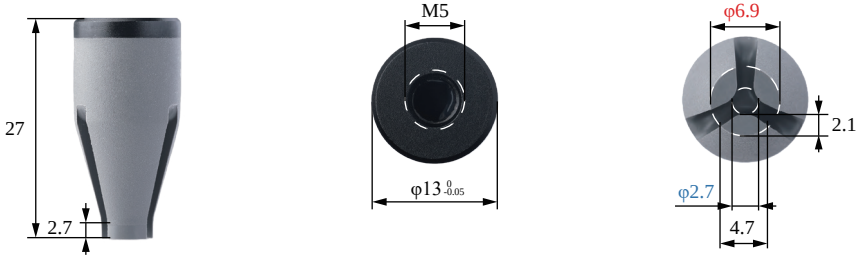

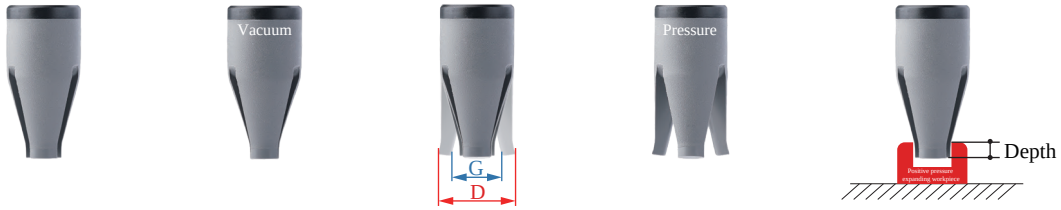

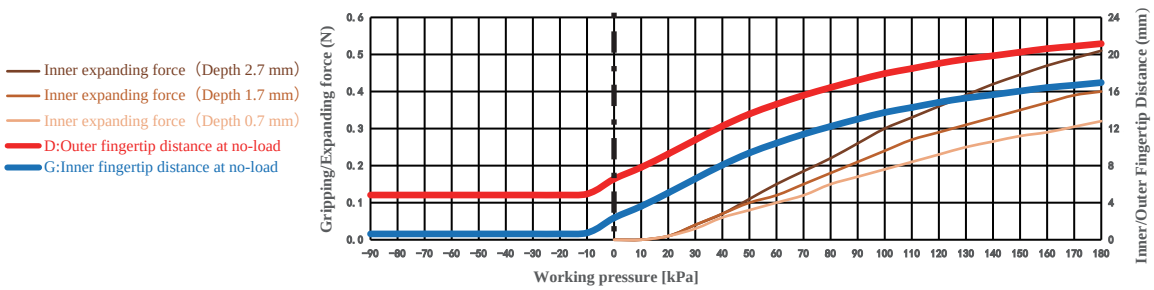

Gripping range	—	Gripping force	—	Theoretical gripping load**	—	Ideal gripping workpiece size*	—
Internal gripping range	6-15mm	Internal gripping force	0-0.5N	Theoretical internal gripping load**	0-38g	Ideal internal gripping workpiece size*	10mm
Joint size	M5	Life time***	1.5 million times	Contact Temperature	<220°C	Safe pressure***	<180kPa

DAC Straight Fitting Installation

Scan to watch videos



DAL Side Fitting Installation

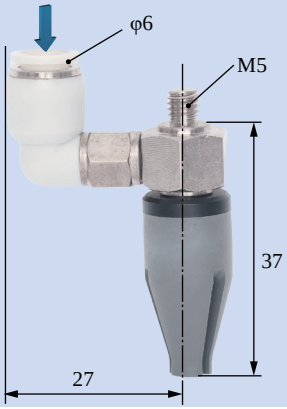

Scara Robotic Arm Installation

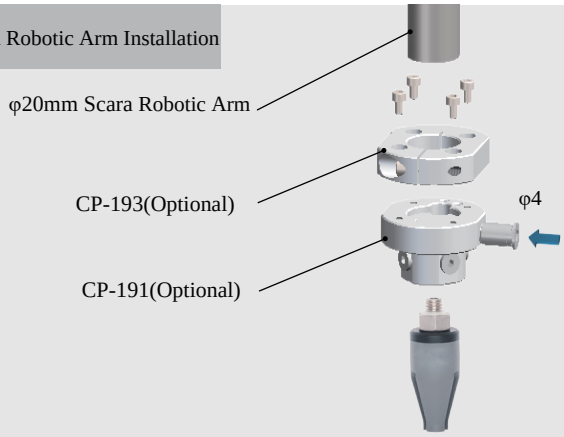

Robotic Arm Flange Side Fitting Installation

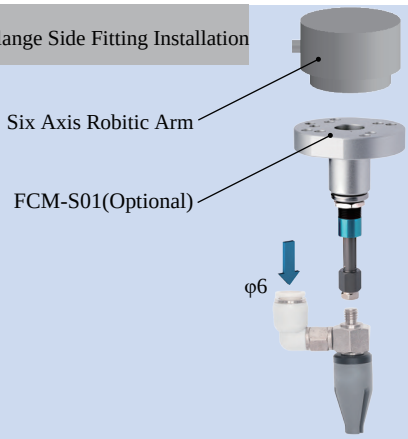

Rigid Connection Installation

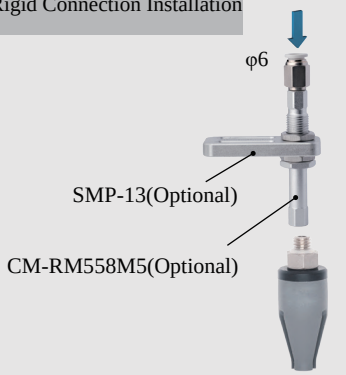

Buffer Installation

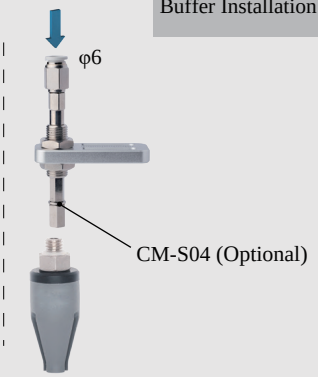

Matrix Installation

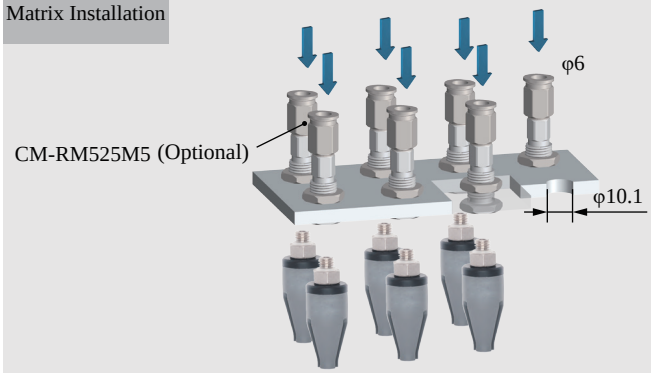

Precise Positioning Installation

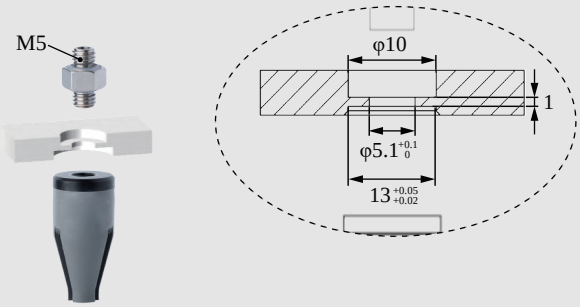

Installation of Optical Fiber Sensors



	DAC-3B13[NH]/S Direct-through Oil-resistant		DAL-3B13[NH]/S Side Fitting Oil-resistant Material	
	**Weight**	4.9g	**Weight**	16.4g

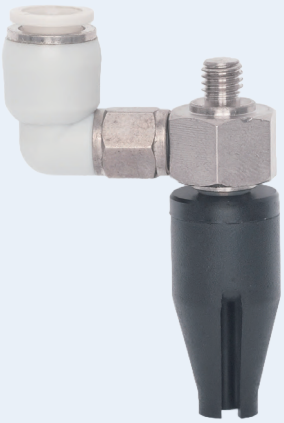

Product features

- Fingertips open under pressure state and clamp in a vacuum. Inner fingertips distance G and outer fingertips distance D can be adjusted by working pressure.It is suggested to be used with Rochu control unit.
- The material of [NH] has good abrasion resistance and oil resistance. It can be in contact with workpieces containing heavy oil (such as lubricating oil, gear oil, hydraulic oil, etc.) for a long time, and can be applied in the metal processing industry.





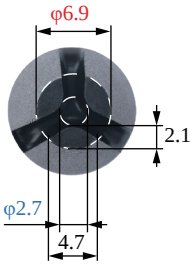









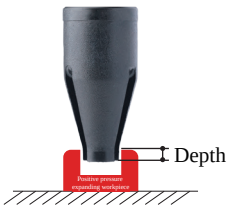

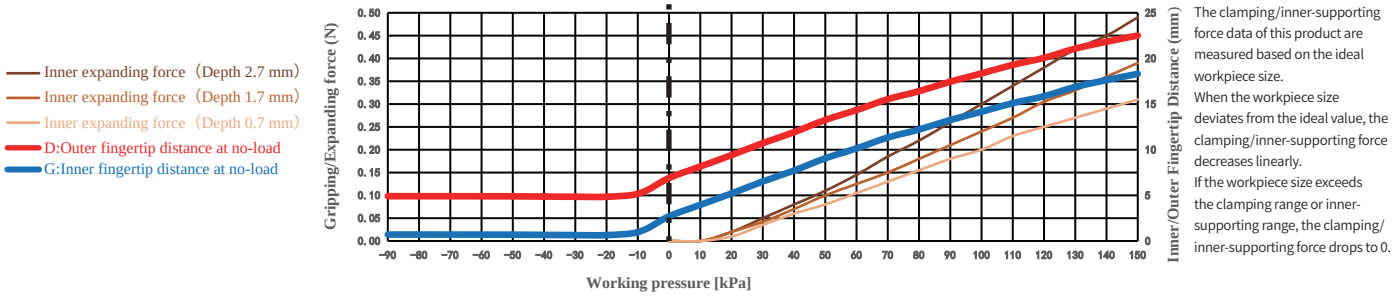

The clamping/inner-supporting force data of this product are measured based on the ideal workpiece size.
When the workpiece size deviates from the ideal value, the clamping/inner-supporting force decreases linearly.
If the workpiece size exceeds the clamping range or inner-supporting range, the clamping/inner-supporting force drops to 0.

Paremeter

Gripping range	—	Gripping force	—	Theoretical gripping load**	—	Ideal gripping workpiece size*	—
Internal gripping range	6-15mm	Internal gripping force	0-0.5N	Theoretical internal gripping load**	0-37g	Ideal internal gripping workpiece size*	10mm
Joint size	M5	Life time***	1.5 million times	Contact Temperature	<100℃	Safe pressure***	<150kPa

*: The width of the cuboid that generates the maximum gripping force (two-finger gripping), the outer diameter of the cylinder (multi-finger gripping), the width of the square hole (two-finger internal gripping), or the inner diameter of the circular hole (multi-finger internal gripping);
**: Only the theoretical load of the ideal workpiece under standard working conditions is marked for reference and comparison. The real load capacity is also affected by factors such as the surface structure and roughness of the workpiece. Please take the measured data as the standard;
***: The working air pressure and the surface roughness of the workpiece in the usage scenario may have different degrees of impact on the life-time. Please configure Rochu control Unit. Do not exceed the safe air pressure.

DAC Straight Fitting Installation

Scan to watch videos



DAL Side Fitting Installation

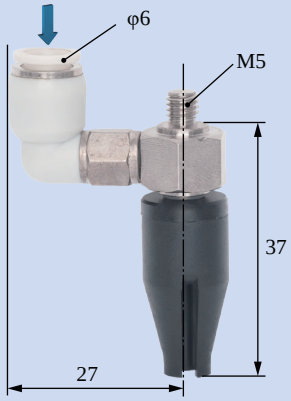

Scara Robotic Arm Installation

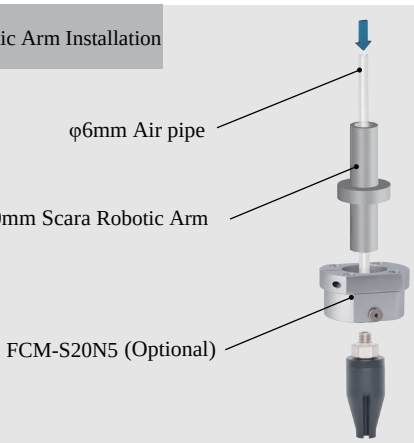

Robotic Arm Flange Side Fitting Installation

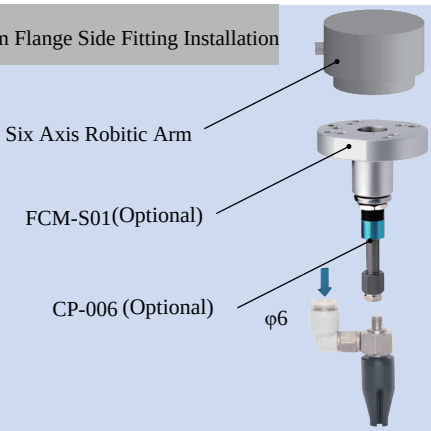

Rigid Connection Installation

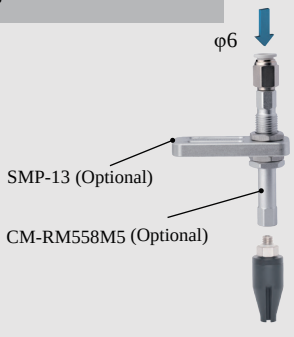

Buffer Installation



Matrix Installation

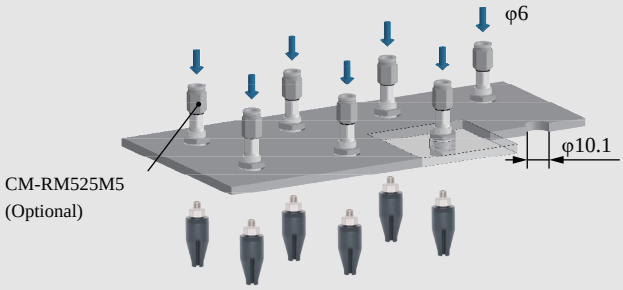

Precise Positioning Installation

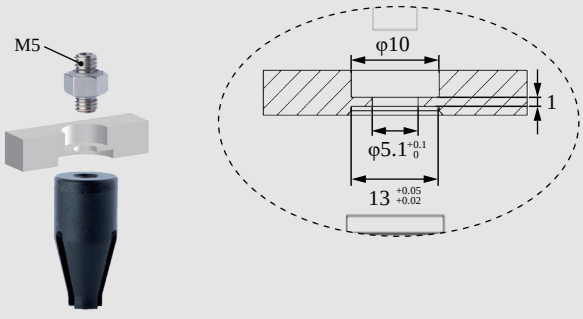

Installation of Optical Fiber Sensors

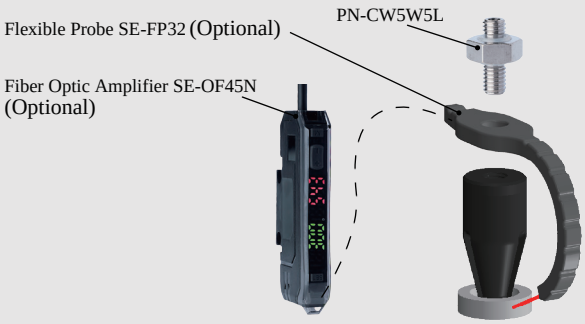

B-3B13[NH]/S



DAC-3B13[HW]/S Direct-through H Type	DAL-3B13[HW]/S Side-through H Type
DAC-3B13[HWAS]/S Direct-through Dust-free H Type	DAL-3B13[HWAS]/S Side-through Dust-free H Type
Weight 4.9g	**Weight** 16.4g



Product features

- Fingertips open under pressure state and clamp in a vacuum.Outer fingertips distance D can be adjusted by working pressure.It is suggested to be used with Rochu control unit.
- Soft beak materials divided into Strong materials [HW]and Dust-free Normal material [HWAS]. For workpieces with dustproof requirements, or miniature and lightweight that are prone to being adsorbed on the fingertips, Dust-free type [PAS] should be preferably selected.
- The soft beak has a white appearance, which can provide a high-contrast white background for dark-colored workpieces at the machine vision inspection station.

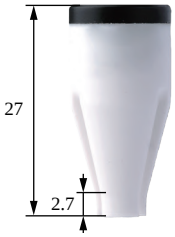



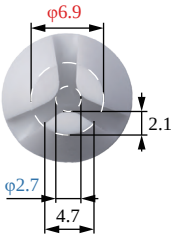

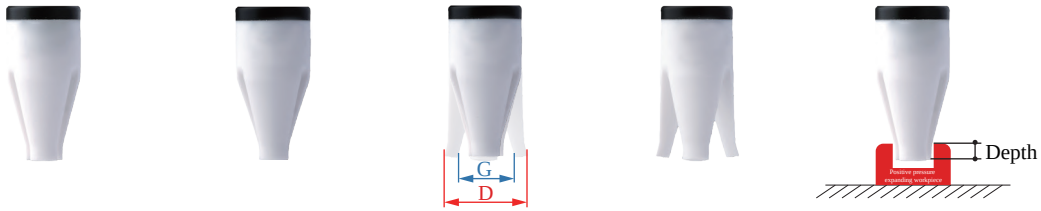

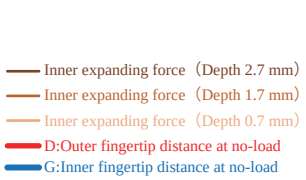

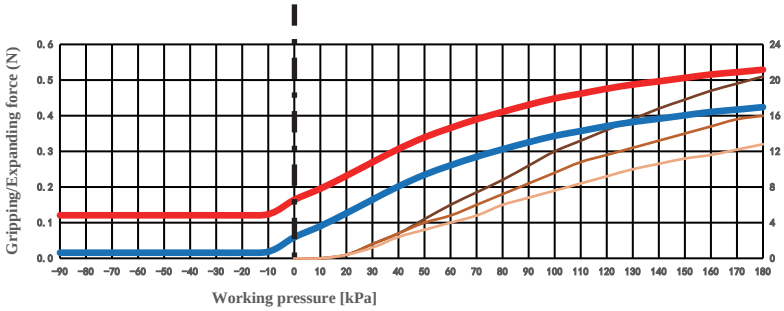

The clamping/inner-supporting force data of this product are measured based on the ideal workpiece size.
When the workpiece size deviates from the ideal value, the clamping/inner-supporting force decreases linearly.
If the workpiece size exceeds the clamping range or inner-supporting range, the clamping/inner-supporting force drops to 0.

Paremeter

Gripping range	—	Gripping force	—	Theoretical gripping load**	—	Ideal gripping workpiece size*	—
Internal gripping range	6-15mm	Internal gripping force	0-0.5N	Theoretical internal gripping load**	0-38g	Ideal internal gripping workpiece size*	10mm
Joint size	M5	Life time***	1.5 million times	Contact Temperature	<220°C	Safe pressure***	<180kPa

*: The width of the cuboid that generates the maximum gripping force (two-finger gripping), the outer diameter of the cylinder (multi-finger gripping), the width of the square hole (two-finger internal gripping), or the inner diameter of the circular hole (multi-finger internal gripping);
**: Only the theoretical load of the ideal workpiece under standard working conditions is marked for reference and comparison. The real load capacity is also affected by factors such as the surface structure and roughness of the workpiece. Please take the measured data as the standard;
***: The working air pressure and the surface roughness of the workpiece in the usage scenario may have different degrees of impact on the life-time. Please configure Rochu control Unit. Do not exceed the safe air pressure.

DAC Straight Fitting Installation

Scan to watch videos



DAL Side Fitting Installation

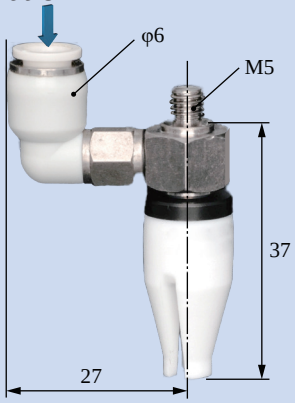

Scara Robotic Arm Installation

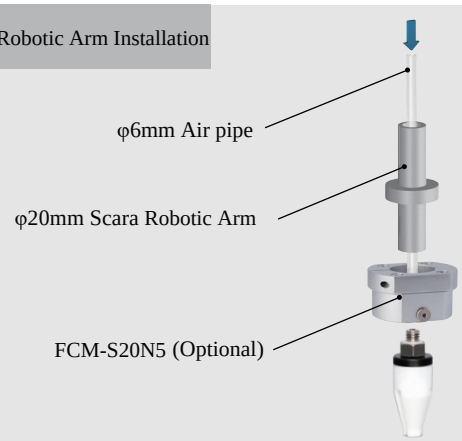

Robotic Arm Flange Side Fitting Installation

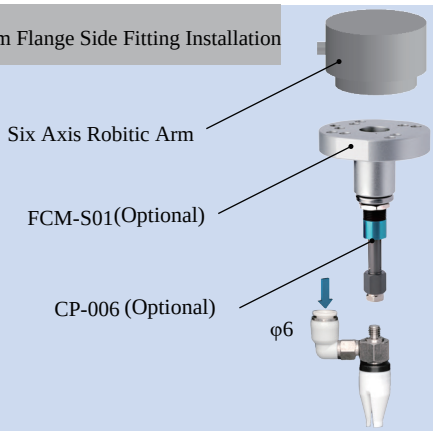

Rigid Connection Installation

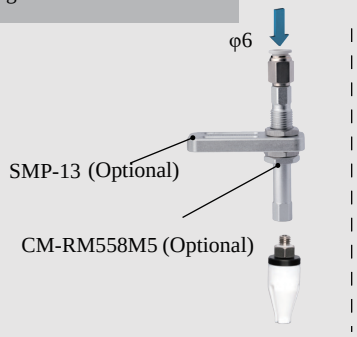

Buffer Installation

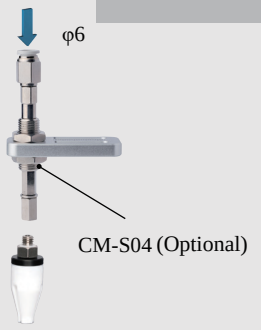

Matrix Installation

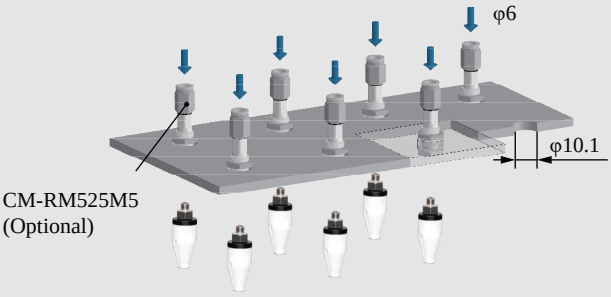

Precise Positioning Installation

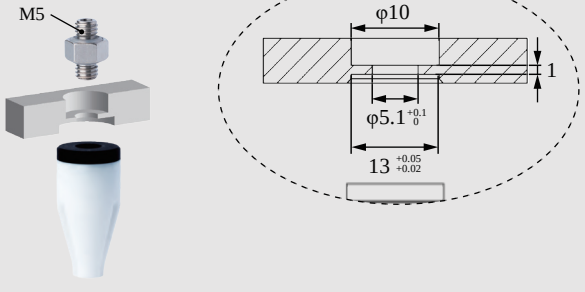

Installation of Optical Fiber Sensors



	DAC-3B14[P]/S Direct-through P Type		DAL-3B14[P]/S Side-through P Type	
	DAC-3B14[PAS]/S Direct-through Dust-free P Type		DAL-3B14[PAS]/S Side-through Dust-free P Type	
	Weight	5.2g	**Weight**	16.7g

Product features

- Fingertip open under pressure and clamped in a vacuum. Inner fingertips distance D can be adjusted by working pressure.It is suggested to be used with Rochu control unit.
- Soft beak material is divided into Normal Material [P] and Dust-free Normal Material [PAS]. When the workpiece is light, or very soft, easy to adhere to adsorp on the soft beak, Dust-free Normal Material [PAS] is preferred.
- Food-grade material, direct food contact approved.

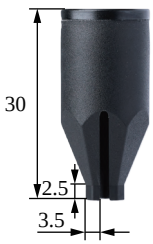

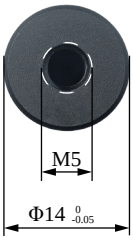

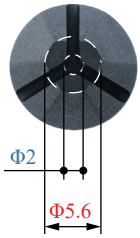



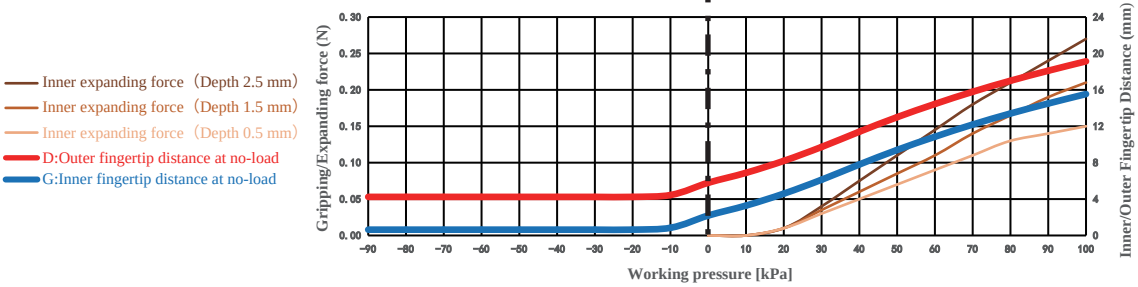

The clamping/inner-supporting force data of this product are measured based on the ideal workpiece size.
When the workpiece size deviates from the ideal value, the clamping/inner-supporting force decreases linearly.
If the workpiece size exceeds the clamping range or inner-supporting range, the clamping/inner-supporting force drops to 0.

Paremeter

Gripping range	—	Gripping force	—	Theoretical gripping load**	—	Ideal gripping workpiece size*	—
Internal gripping range	5.5-13mm	Internal gripping force	0-0.3N	Theoretical internal gripping load**	0-20g	Ideal internal gripping workpiece size*	8mm
Joint size	M5	Life time***	1.5 million times	Contact Temperature	<220°C	Safe pressure***	<100kPa

*: The width of the cuboid that generates the maximum gripping force (two-finger gripping), the outer diameter of the cylinder (multi-finger gripping), the width of the square hole (two-finger internal gripping), or the inner diameter of the circular hole (multi-finger internal gripping);
**: Only the theoretical load of the ideal workpiece under standard working conditions is marked for reference and comparison. The real load capacity is also affected by factors such as the surface structure and roughness of the workpiece. Please take the measured data as the standard;
***: The working air pressure and the surface roughness of the workpiece in the usage scenario may have different degrees of impact on the life-time. Please configure Rochu control Unit. Do not exceed the safe air pressure.

DAC Straight Fitting Installation

Scan to watch videos



DAL Side Fitting Installation

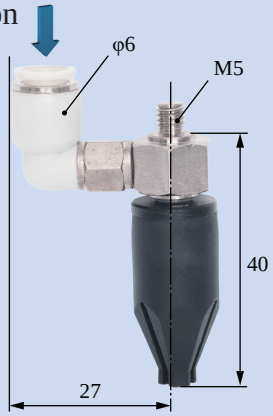

Scara Robotic Arm Installation

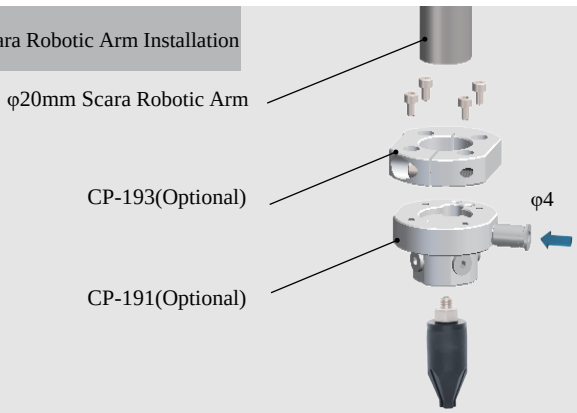

Robotic Arm Flange Side Fitting Installation

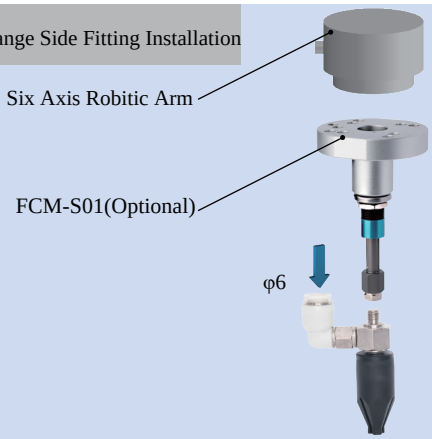

Rigid Connection Installation

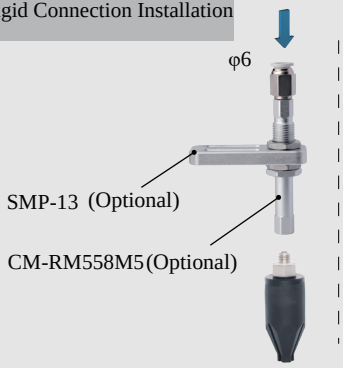

Buffer Installation

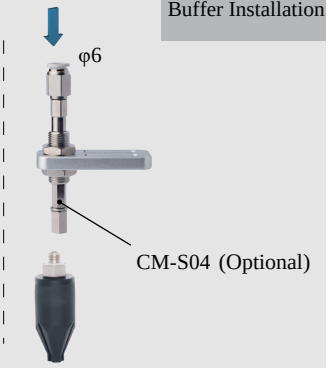

Matrix Installation

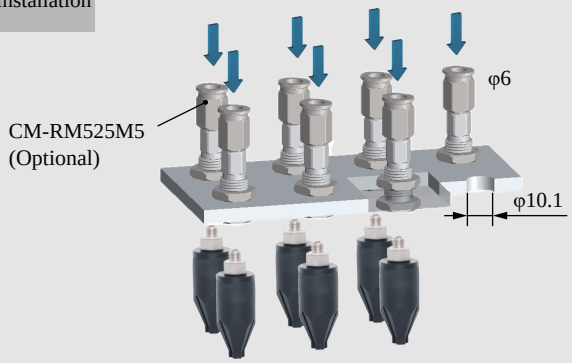

Precise Positioning Installation

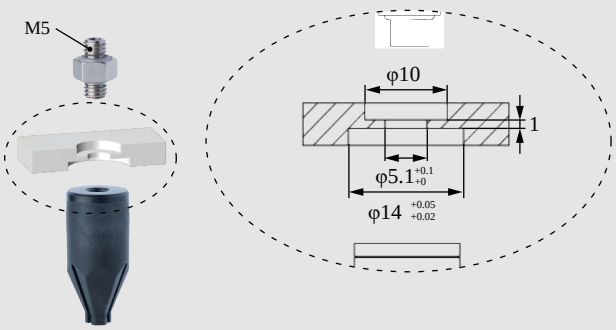

Installation of Optical Fiber Sensors





DAC-3B14[H]/S Direct-through H Type		DAL-3B14[H]/S Side-through H Type	
DAC-3B14[HAS]/S Direct-through Dust-free H Type		DAL-3B14[HAS]/S Side-through Dust-free H Type	
Weight	5.7g	**Weight**	17.2g



Product features

- Fingertip open under pressure and clamped in a vacuum. Inner fingertips distance D can be adjusted by working pressure.It is suggested to be used with Rochu control unit.
- Soft beak material is divided into Normal Material [H] and Dust-free Normal Material [HAS]. When the workpiece is light, or very soft, easy to adhere to adsorp on the soft beak, Dust-free Normal Material [HAS] is preferred.
- Food-grade material, direct food contact approved.

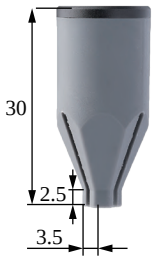

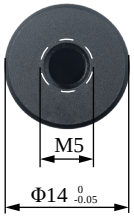

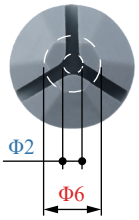



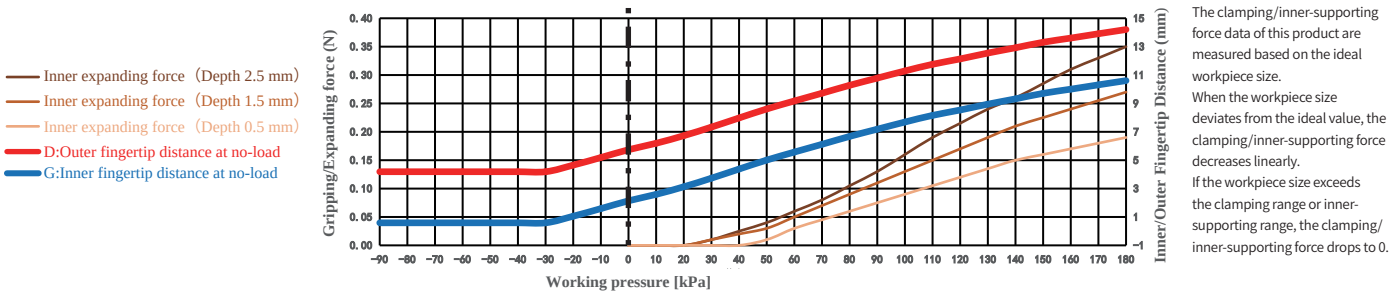

The clamping/inner-supporting force data of this product are measured based on the ideal workpiece size.
When the workpiece size deviates from the ideal value, the clamping/inner-supporting force decreases linearly.
If the workpiece size exceeds the clamping range or inner-supporting range, the clamping/inner-supporting force drops to 0.

Paremeter

Gripping range	—	Gripping force	—	Theoretical gripping load**	—	Ideal gripping workpiece size*	—
Internal gripping range	5.5-11mm	Internal gripping force	0-0.4N	Theoretical internal gripping load**	0-26g	Ideal internal gripping workpiece size*	8mm
Joint size	M5	Life time***	1.5 million times	Contact Temperature	<220°C	Safe pressure***	<180kPa

*: The width of the cuboid that generates the maximum gripping force (two-finger gripping), the outer diameter of the cylinder (multi-finger gripping), the width of the square hole (two-finger internal gripping), or the inner diameter of the circular hole (multi-finger internal gripping);
**: Only the theoretical load of the ideal workpiece under standard working conditions is marked for reference and comparison. The real load capacity is also affected by factors such as the surface structure and roughness of the workpiece. Please take the measured data as the standard;
***: The working air pressure and the surface roughness of the workpiece in the usage scenario may have different degrees of impact on the life-time. Please configure Rochu control Unit. Do not exceed the safe air pressure.

DAC Straight Fitting Installation

Scan to watch videos



DAL Side Fitting Installation

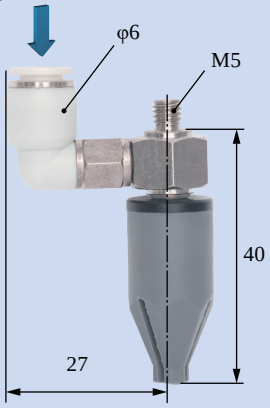

Scara Robotic Arm Installation

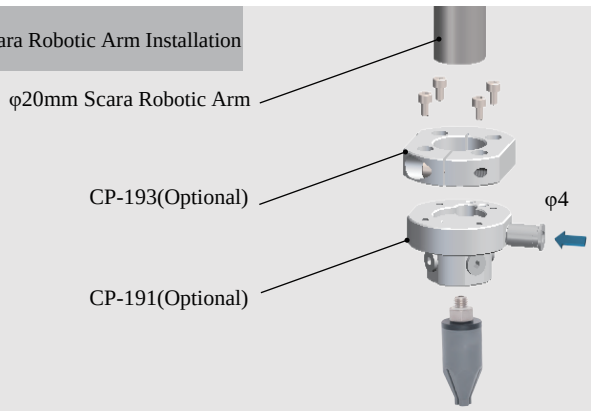

Robotic Arm Flange Side Fitting Installation

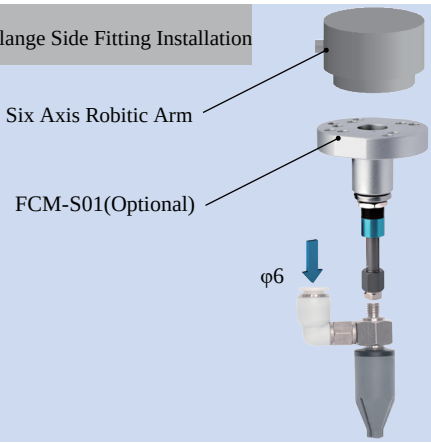

Rigid Connection Installation

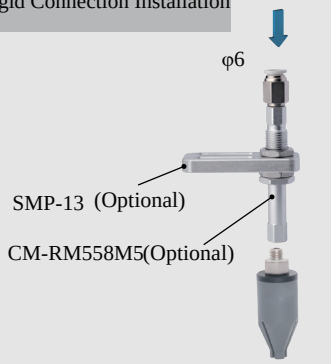

Buffer Installation

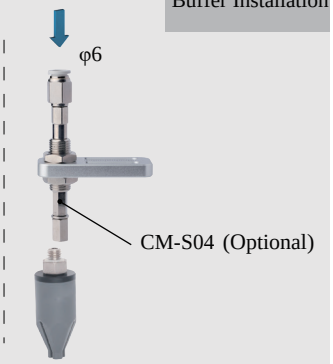

Matrix Installation

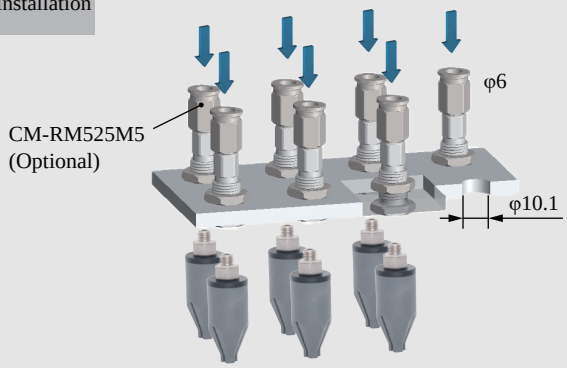

Precise Positioning Installation

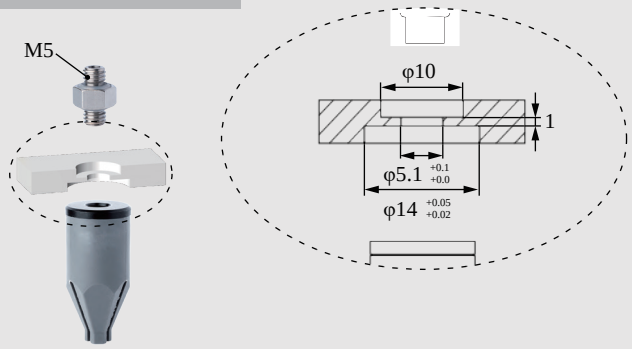

Installation of Optical Fiber Sensors





DAC-3BA14[H]/S Direct-through H Type		DAL-3BA14[H]/S Side-through H Type	
DAC-3BA14[HAS]/S Direct-through Dust-free H Type		DAL-3BA14[HAS]/S Side-through Dust-free H Type	
Weight	5.8g	**Weight**	17.2g



Product features

- Fingertip open under pressure and clamped in a vacuum. Fingertip distance G can be adjusted by working pressure.It is suggested to be used with Rochu control unit.
- Soft beak material is divided into Normal Material [H] and Dust-free Normal Material [HAS]. When the workpiece is light, or very soft, easy to adhere to adsorp on the soft beak, Dust-free Normal Material [HAS] is preferred.
- Food-grade material, direct food contact approved.

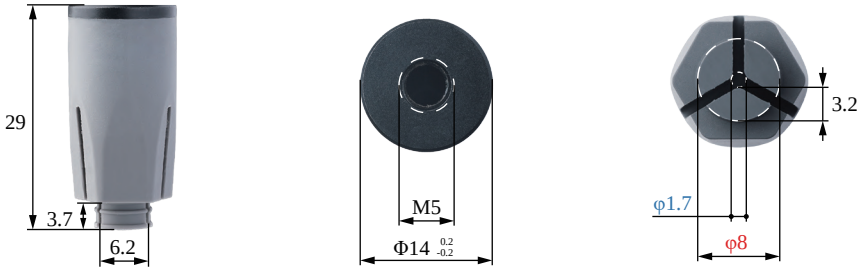

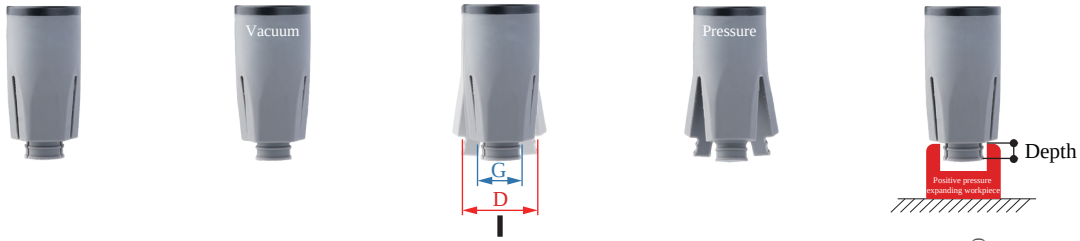

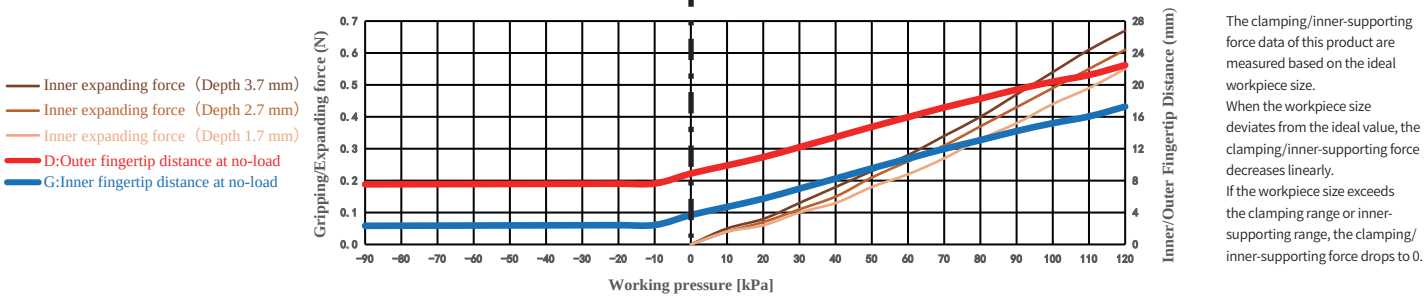

The clamping/inner-supporting force data of this product are measured based on the ideal workpiece size.
When the workpiece size deviates from the ideal value, the clamping/inner-supporting force decreases linearly.
If the workpiece size exceeds the clamping range or inner-supporting range, the clamping/inner-supporting force drops to 0.

Paremeter

Gripping range	—	Gripping force	—	Theoretical gripping load**	—	Ideal gripping workpiece size*	—
Internal gripping range	8-24mm	Internal gripping force	0-0.7N	Theoretical internal gripping load**	0-50g	Ideal internal gripping workpiece size*	8mm
Joint size	M5	Life time***	1.5 million times	Contact Temperature	<220°C	Safe pressure***	<120kPa

*: The width of the cuboid that generates the maximum gripping force (two-finger gripping), the outer diameter of the cylinder (multi-finger gripping), the width of the square hole (two-finger internal gripping), or the inner diameter of the circular hole (multi-finger internal gripping);
**: Only the theoretical load of the ideal workpiece under standard working conditions is marked for reference and comparison. The real load capacity is also affected by factors such as the surface structure and roughness of the workpiece. Please take the measured data as the standard;
***: The working air pressure and the surface roughness of the workpiece in the usage scenario may have different degrees of impact on the life-time. Please configure Rochu control Unit. Do not exceed the safe air pressure.

DAC Straight Fitting Installation

Scan to watch videos



DAL Side Fitting Installation

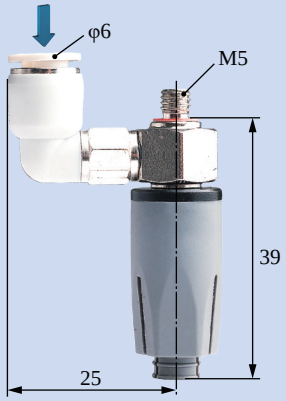

Scara Robotic Arm Installation

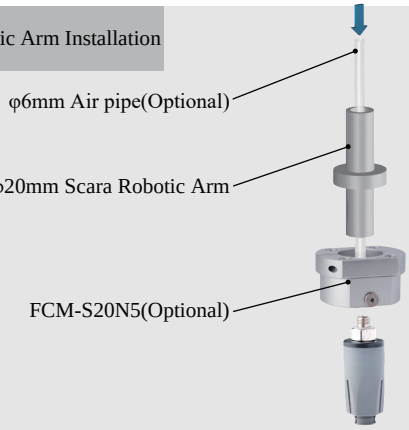

Robotic Arm Flange Side Fitting Installation

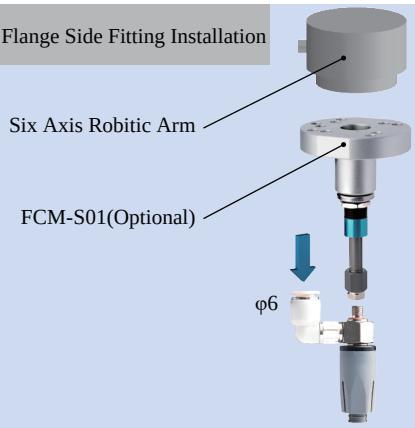

Rigid Connection Installation

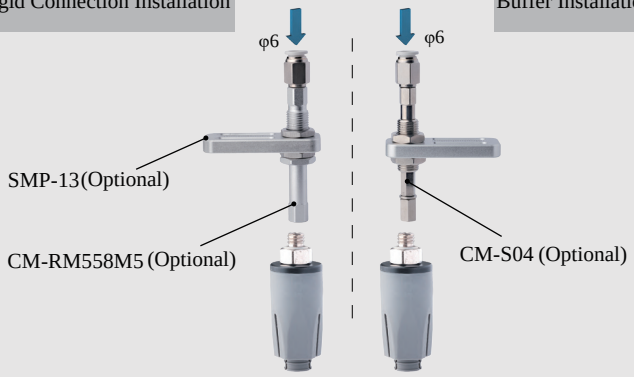

Buffer Installation

Matrix Installation

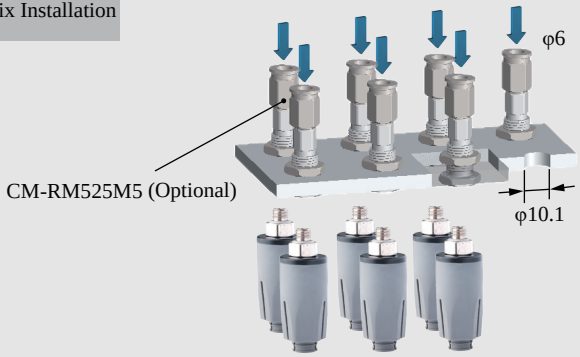

Precise Positioning Installation

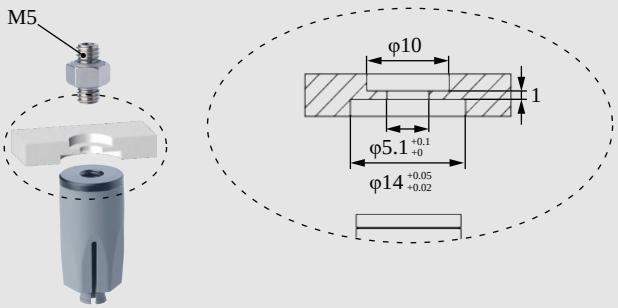

Installation of Optical Fiber Sensors





DAC-3BD14[H]/S Direct-through H Type		DAL-3BD14[H]/S Side-through H Type	
DAC-3BD14[HAS]/S Direct-through Dust-free H Type		DAL-3BD14[HAS]/S Side-through Dust-free H Type	
Weight	3.3g	Weight	20.9g



- Fingertip open under pressure and clamped in a vacuum. Fingertip distance G can be adjusted by working pressure.It is suggested to be used with Rochu control unit.
- Soft beak material is divided into Normal Material [H] and Dust-free Normal Material [HAS]. When the workpiece is light, or very soft, easy to adhere to adsorp on the soft beak, Dust-free Normal Material [HAS] is preferred.
- Food-grade material, direct food contact approved.

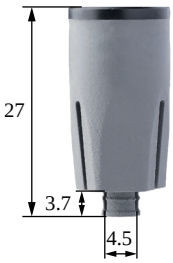

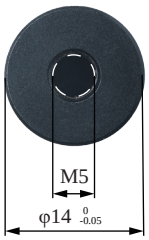

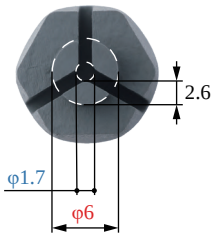

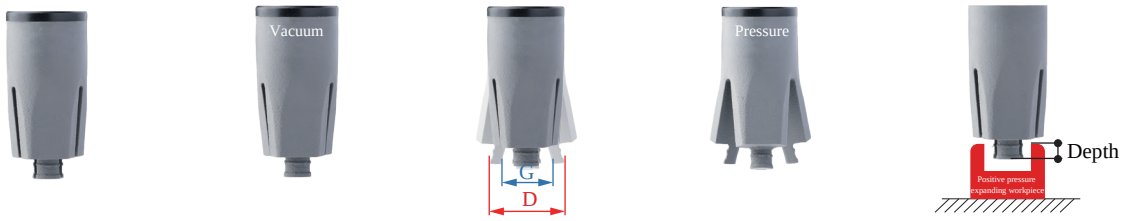

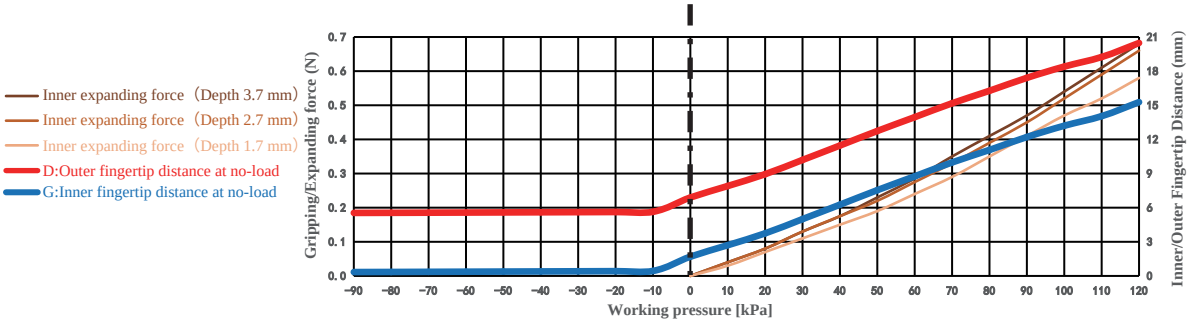

Gripping range	—	Gripping force	—	Theoretical gripping load**	—	Ideal gripping workpiece size*	—
Internal gripping range	6-19mm	Internal gripping force	0-0.7N	Theoretical internal gripping load**	0-51g	Ideal internal gripping workpiece size*	9mm
Joint size	M5	Life time***	1.5 million times	Contact Temperature	<220°C	Safe pressure***	<120kPa

DAC Straight Fitting Installation

Scan to watch videos



DAL Side Fitting Installation

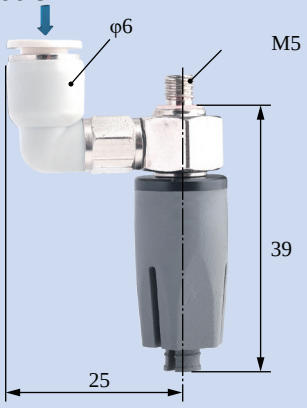

Scara Robotic Arm Installation

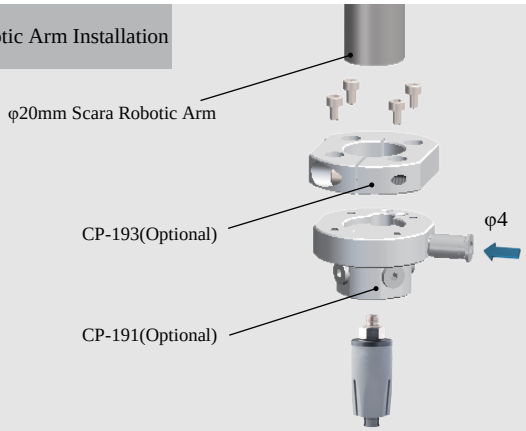

Robotic Arm Flange Side Fitting Installation

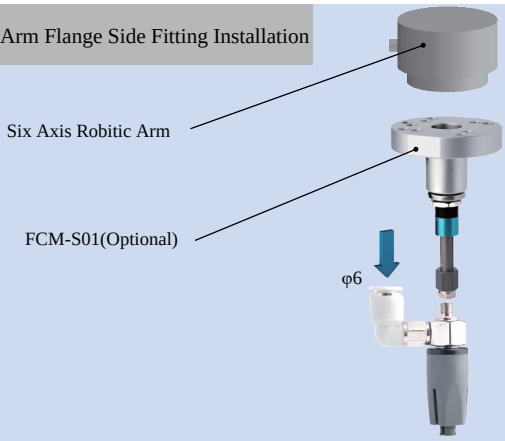

Rigid Connection Installation

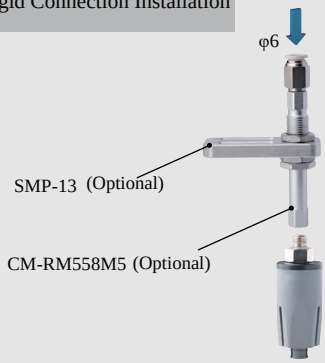

Buffer Installation



Matrix Installation

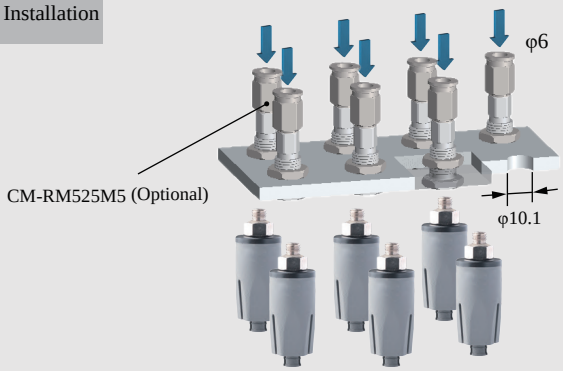

Precise Positioning Installation

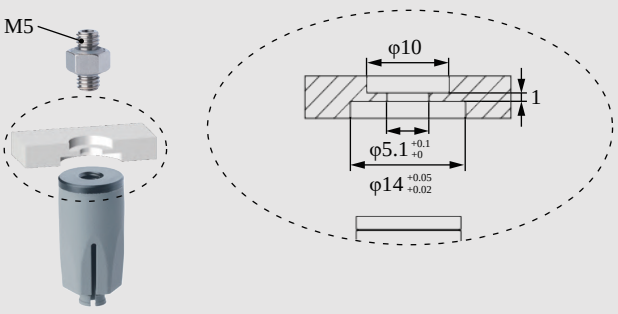

Installation of Optical Fiber Sensors





DAC-3BD14[H] Direct-through H Type		DAL-3BD14[H] Side-through H Type	
DAC-3BD14[HAS] Direct-through Dust-free H Type		DAL-3BD14[HAS] Side-through Dust-free H Type	
Weight	3.3g	**Weight**	20.9g



Product features

- Fingertip open under pressure and clamped in a vacuum. Fingertip distance G can be adjusted by working pressure.It is suggested to be used with Rochu control unit.
- Soft beak material is divided into Normal Material [H] and Dust-free Normal Material [HAS]. When the workpiece is light, or very soft, easy to adhere to adsorp on the soft beak, Dust-free Normal Material [HAS] is preferred.
- Food-grade material, direct food contact approved.

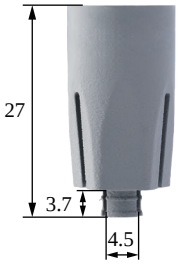

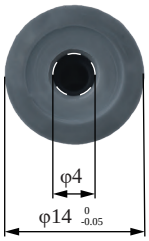

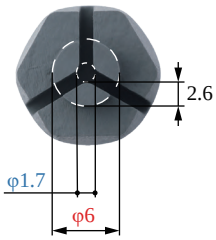

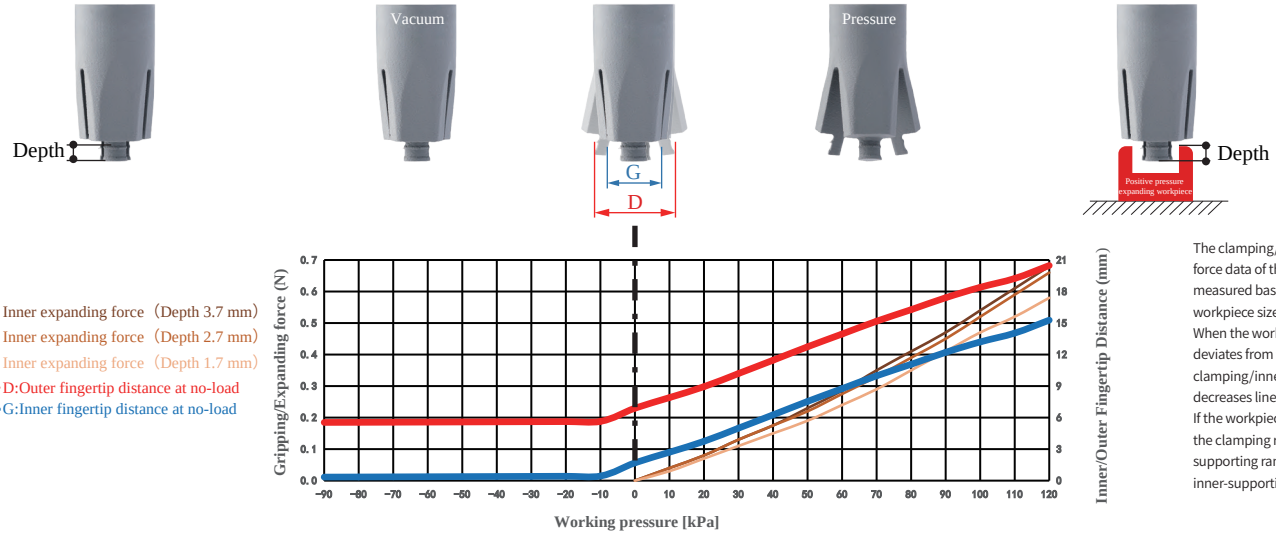

The clamping/inner-supporting force data of this product are measured based on the ideal workpiece size.
When the workpiece size deviates from the ideal value, the clamping/inner-supporting force decreases linearly.
If the workpiece size exceeds the clamping range or inner-supporting range, the clamping/inner-supporting force drops to 0.

Paremeter

Gripping range	—	Gripping force	—	Theoretical gripping load**	—	Ideal gripping workpiece size*	—
Internal gripping range	6-19mm	Internal gripping force	0-0.85N	Theoretical internal gripping load**	0-64g	Ideal internal gripping workpiece size*	9mm
Joint size	M5	Life time***	1.5 million times	Contact Temperature	<220°C	Safe pressure***	<120kPa

*: The width of the cuboid that generates the maximum gripping force (two-finger gripping), the outer diameter of the cylinder (multi-finger gripping), the width of the square hole (two-finger internal gripping), or the inner diameter of the circular hole (multi-finger internal gripping);
**: Only the theoretical load of the ideal workpiece under standard working conditions is marked for reference and comparison. The real load capacity is also affected by factors such as the surface structure and roughness of the workpiece. Please take the measured data as the standard;
***: The working air pressure and the surface roughness of the workpiece in the usage scenario may have different degrees of impact on the life-time. Please configure Rochu control Unit. Do not exceed the safe air pressure.

DAC Straight Fitting Installation



DAL Side Fitting Installation

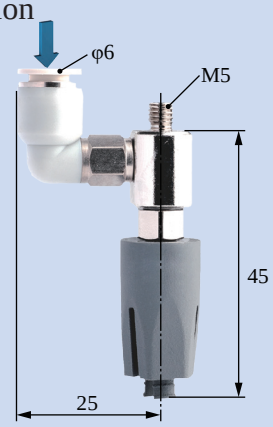

Scara Robotic Arm Installation

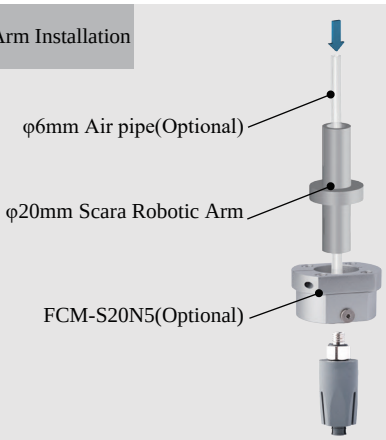

Robotic Arm Flange Side Fitting Installation

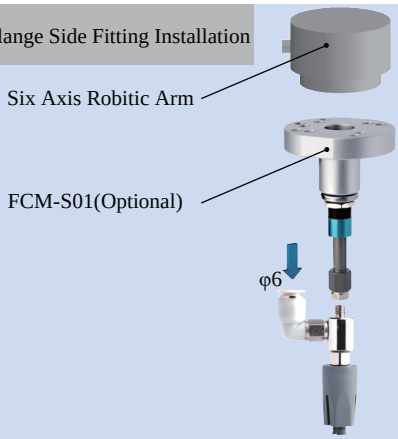

Rigid Connection Installation

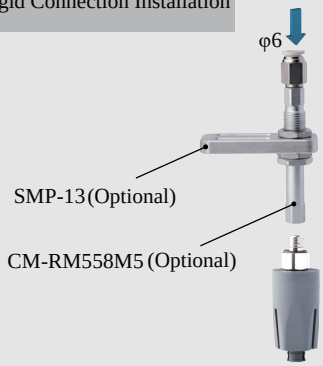

Buffer Installation

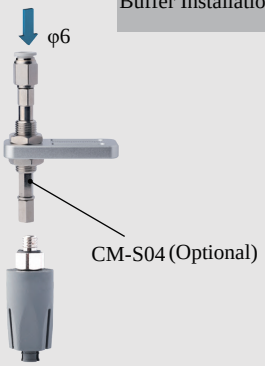

Matrix Installation

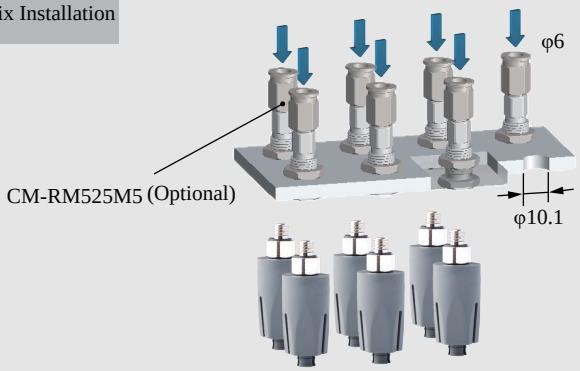

B-3BD14[H]



DAC-3A15[P]/S Direct-through P Type		DAL-3A15[P]/S Direct-through P Type	
DAC-3A15[PAS]/S Direct-through Dust-free P Type		DAL-3A15[PAS]/S Side-through Dust-free P Type	
Weight	6.4g	**Weight**	17.9g



Product features

- The inner fingertip distance G and the outer fingertip distance D can be adjusted by using the working air pressure.
- Soft beak material is divided into Normal Material [P] and Dust-free Normal Material [PAS]. When the workpiece is light, or very soft, easy to adhere to adsorp on the soft beak, Dust-free Normal Material [PAS] is preferred.
- Food-grade material, direct food contact approved.

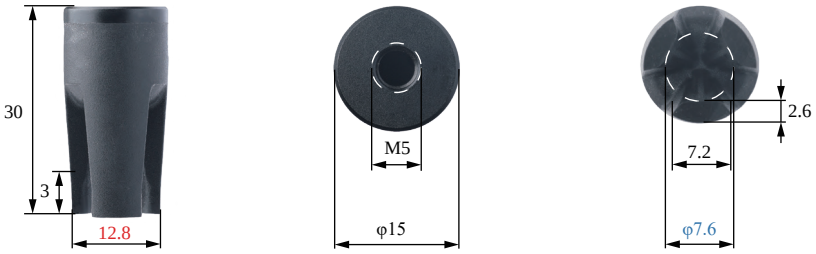

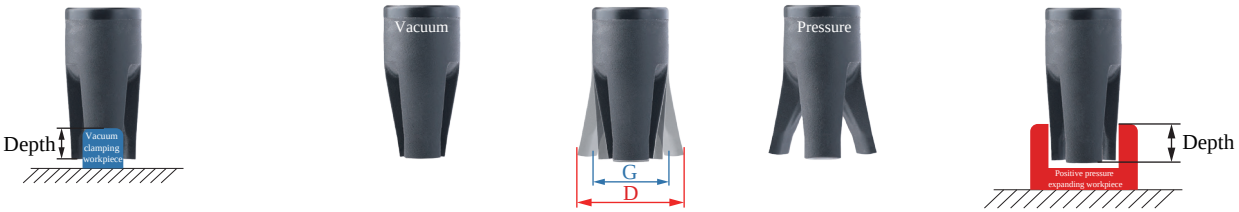

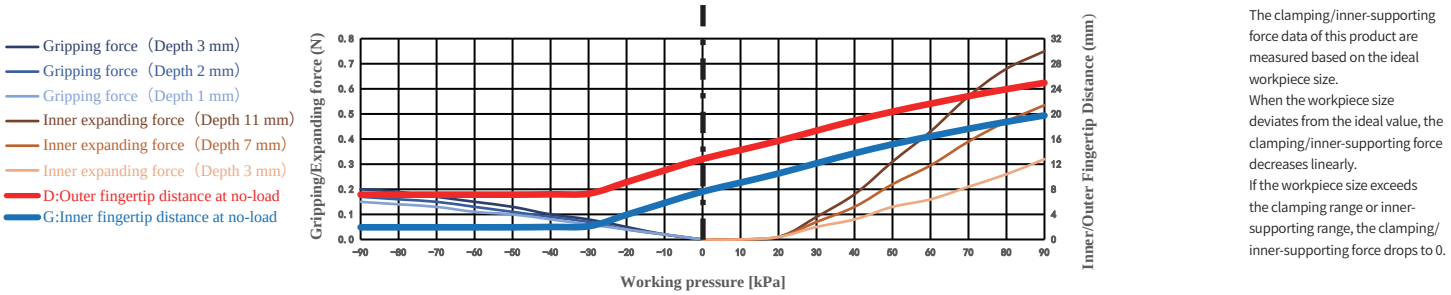

The clamping/inner-supporting force data of this product are measured based on the ideal workpiece size.
When the workpiece size deviates from the ideal value, the clamping/inner-supporting force decreases linearly.
If the workpiece size exceeds the clamping range or inner-supporting range, the clamping/inner-supporting force drops to 0.

Paremeter

Gripping range	2-8mm	Gripping force	0-0.2N	Theoretical gripping load**	0-15g	Ideal gripping workpiece size*	7.5mm
Internal gripping range	15-22mm	Internal gripping force	0-0.8N	Theoretical internal gripping load**	0-56g	Ideal internal gripping workpiece size*	15mm
Joint size	M5	Life time***	1.5 million times	Contact Temperature	<220°C	Safe pressure***	<90kPa

*: The width of the cuboid that generates the maximum gripping force (two-finger gripping), the outer diameter of the cylinder (multi-finger gripping), the width of the square hole (two-finger internal gripping), or the inner diameter of the circular hole (multi-finger internal gripping);
**: Only the theoretical load of the ideal workpiece under standard working conditions is marked for reference and comparison. The real load capacity is also affected by factors such as the surface structure and roughness of the workpiece. Please take the measured data as the standard;
***: The working air pressure and the surface roughness of the workpiece in the usage scenario may have different degrees of impact on the life-time. Please configure Rochu control Unit. Do not exceed the safe air pressure.

DAC Straight Fitting Installation

Scan to watch videos



DAL Side Fitting Installation

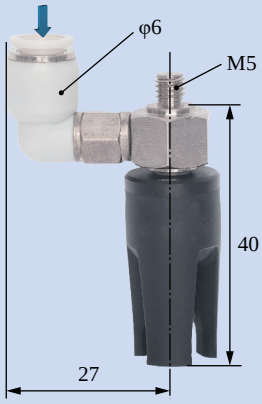

Scara Robotic Arm Installation

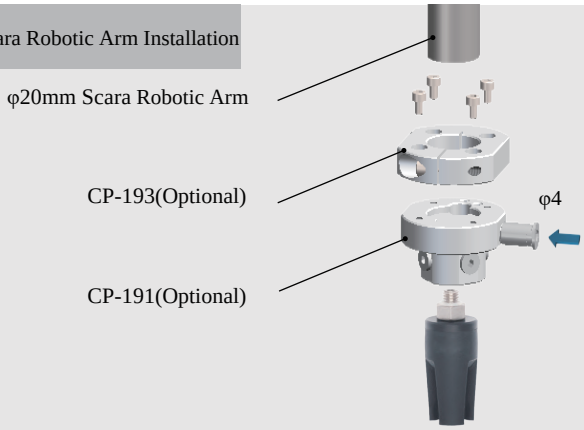

Robotic Arm Flange Side Fitting Installation

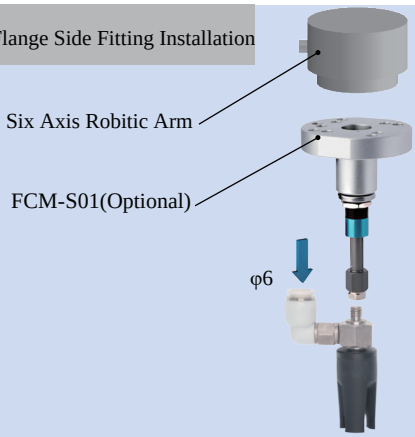

Rigid Connection Installation

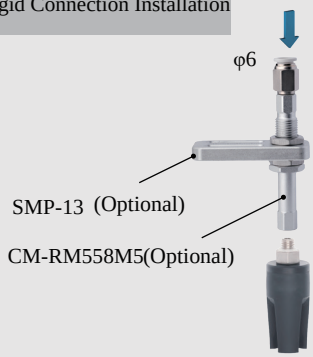

Buffer Installation

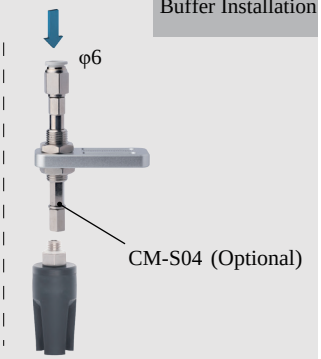

Matrix Installation

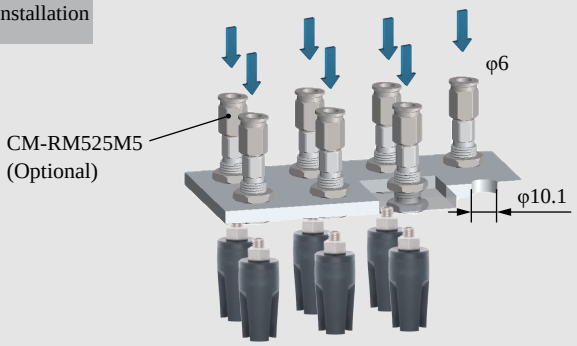

Precise Positioning Installation

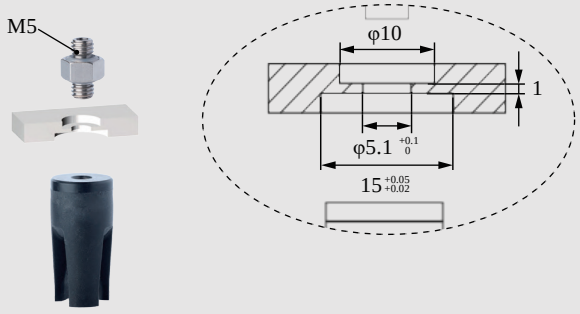

Installation of Optical Fiber Sensors





DAC-3A15[H]/S Direct-through H Type		DAL-3A15[H]/S Direct-through H Type	
DAC-3A15[HAS]/S Direct-through Dust-free H Type		DAL-3A15[HAS]/S Side-through Dust-free H Type	
Weight	6.4g	**Weight**	17.9g



Product features

- The inner fingertip distance G and the outer fingertip distance D can be adjusted by using the working air pressure.
- Soft beak material is divided into Normal Material [H] and Dust-free Normal Material [HAS]. When the workpiece is light, or very soft, easy to adhere to adsorp on the soft beak, Dust-free Normal Material [HAS] is preferred.
- Food-grade material, direct food contact approved.

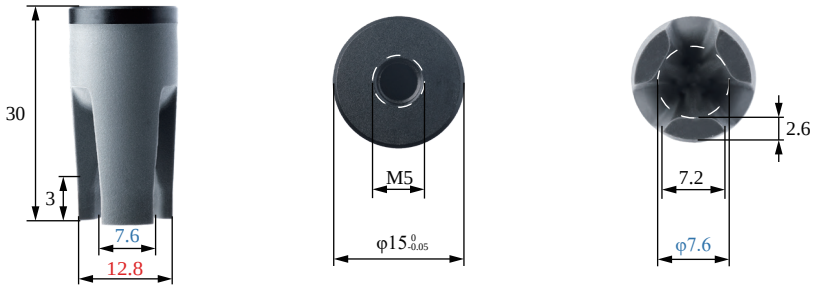

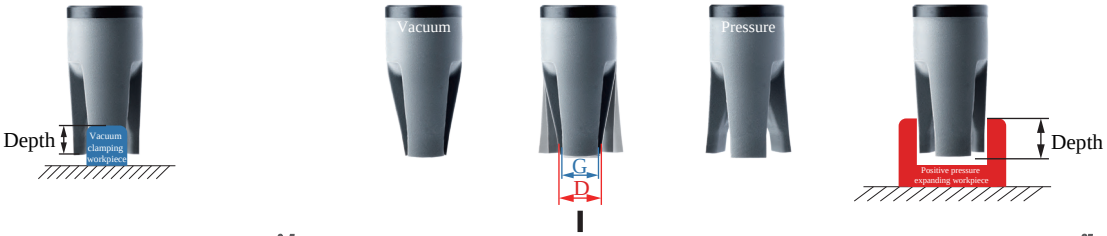

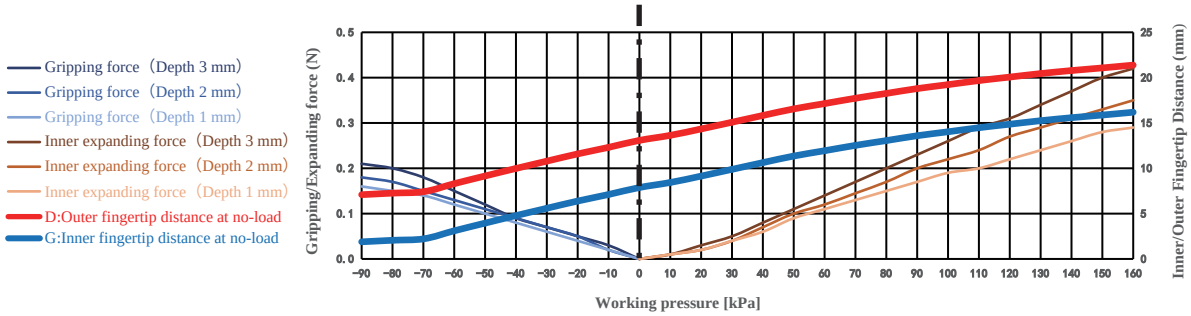

The clamping/inner-supporting force data of this product are measured based on the ideal workpiece size.
When the workpiece size deviates from the ideal value, the clamping/inner-supporting force decreases linearly.
If the workpiece size exceeds the clamping range or inner-supporting range, the clamping/inner-supporting force drops to 0.

Paremeter

Gripping range	5-12mm	Gripping force	0-0.2N	Theoretical gripping load**	0-16g	Ideal gripping workpiece size*	8mm
Internal gripping range	10-20mm	Internal gripping force	0-0.4N	Theoretical internal gripping load**	0-32g	Ideal internal gripping workpiece size*	14mm
Joint size	M5	Life time***	1.5 million times	Contact Temperature	<220℃	Safe pressure***	<160kPa

*: The width of the cuboid that generates the maximum gripping force (two-finger gripping), the outer diameter of the cylinder (multi-finger gripping), the width of the square hole (two-finger internal gripping), or the inner diameter of the circular hole (multi-finger internal gripping);
**: Only the theoretical load of the ideal workpiece under standard working conditions is marked for reference and comparison. The real load capacity is also affected by factors such as the surface structure and roughness of the workpiece. Please take the measured data as the standard;
***: The working air pressure and the surface roughness of the workpiece in the usage scenario may have different degrees of impact on the life-time. Please configure Rochu control Unit. Do not exceed the safe air pressure.

DAC Straight Fitting Installation



DAL Side Fitting Installation

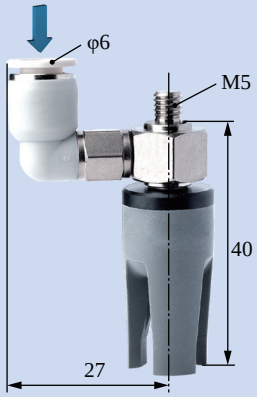

Scara Robotic Arm Installation

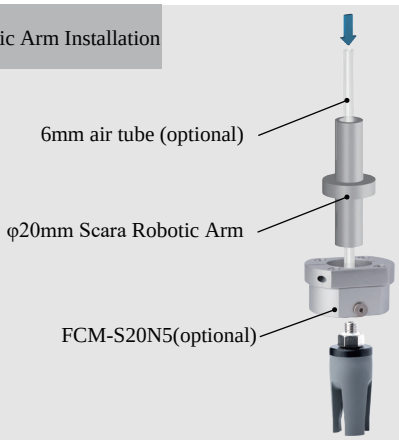

Robotic Arm Flange Side Fitting Installation

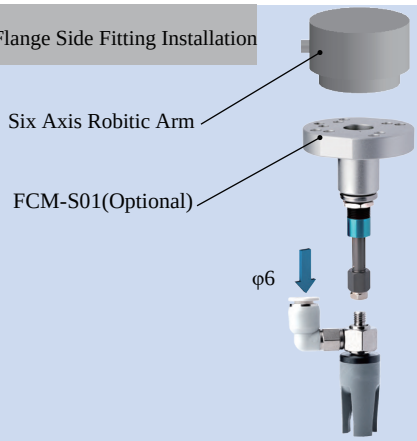

Rigid Connection Installation

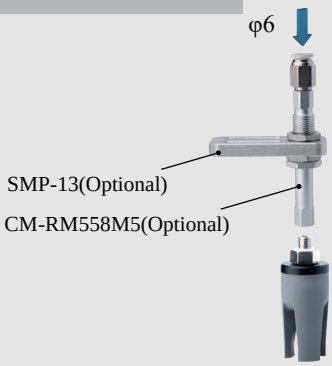

Buffer Installation

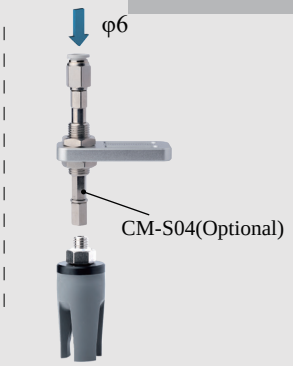

Matrix Installation

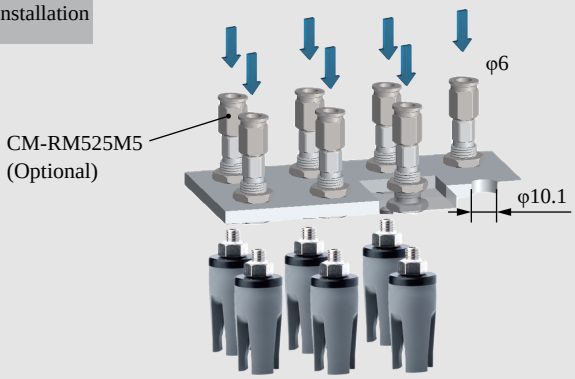

Precise Positioning Installation

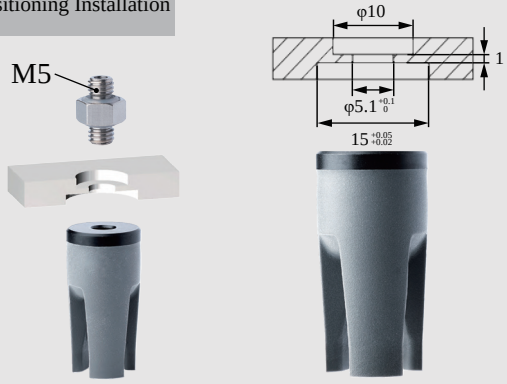

Installation of Optical Fiber Sensors





DAC-3A18[P]/S Direct-through P Type		DAL-3A18[P]/S Direct-through P Type	
DAC-3A18[PAS]/S Direct-through Dust-free P Type		DAL-3A18[PAS]/S Side-through Dust-free P Type	
Weight	9.9g	**Weight**	21.4g



Product features

- The inner fingertip distance G and the outer fingertip distance D can be adjusted by using the working air pressure.
- Soft beak material is divided into Normal Material [P] and Dust-free Normal Material [PAS]. When the workpiece is light, or very soft, easy to adhere to adsorp on the soft beak, Dust-free Normal Material [PAS] is preferred.
- Food-grade material, direct food contact approved.

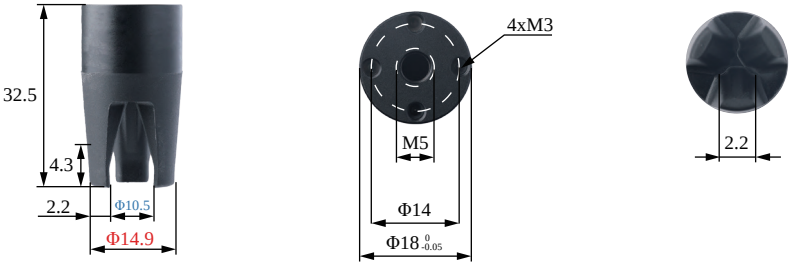

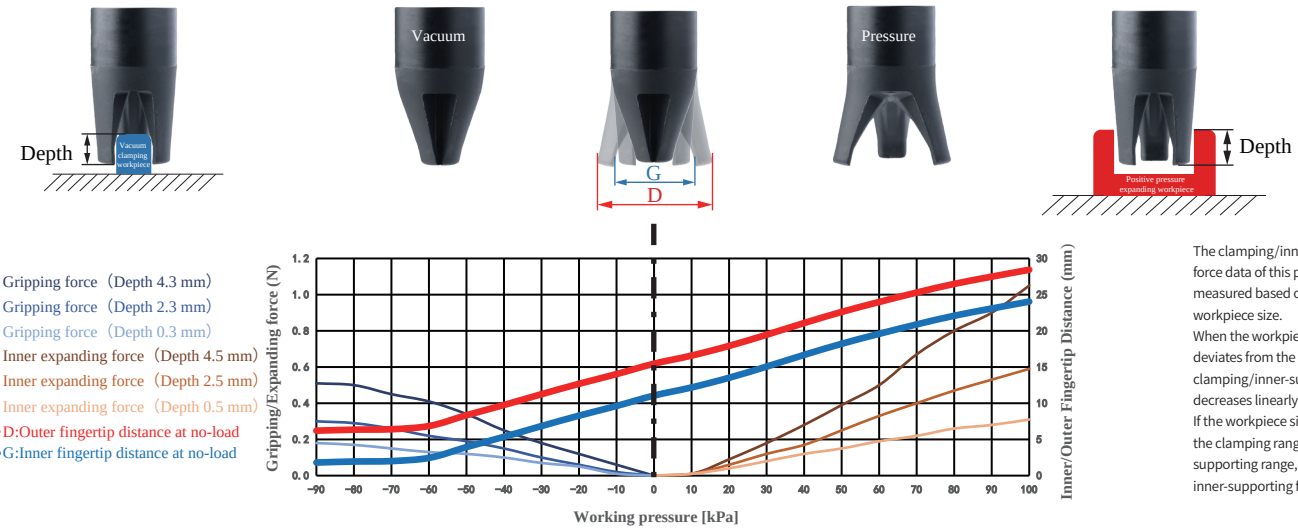

The clamping/inner-supporting force data of this product are measured based on the ideal workpiece size.
When the workpiece size deviates from the ideal value, the clamping/inner-supporting force decreases linearly.
If the workpiece size exceeds the clamping range or inner-supporting range, the clamping/inner-supporting force drops to 0.

Paremeter

Gripping range	3-12mm	Gripping force	0-0.5N	Theoretical gripping load**	0-38g	Ideal gripping workpiece size*	10.5mm
Internal gripping range	17-21mm	Internal gripping force	0-1.1N	Theoretical internal gripping load**	0-79g	Ideal internal gripping workpiece size*	17mm
Joint size	M5	Life time***	1.5 million times	Contact Temperature	<220°C	Safe pressure***	<100kPa

*: The width of the cuboid that generates the maximum gripping force (two-finger gripping), the outer diameter of the cylinder (multi-finger gripping), the width of the square hole (two-finger internal gripping), or the inner diameter of the circular hole (multi-finger internal gripping);
**: Only the theoretical load of the ideal workpiece under standard working conditions is marked for reference and comparison. The real load capacity is also affected by factors such as the surface structure and roughness of the workpiece. Please take the measured data as the standard;
***: The working air pressure and the surface roughness of the workpiece in the usage scenario may have different degrees of impact on the life-time. Please configure Rochu control Unit. Do not exceed the safe air pressure.

DAC Straight Fitting Installation

Scan to watch videos

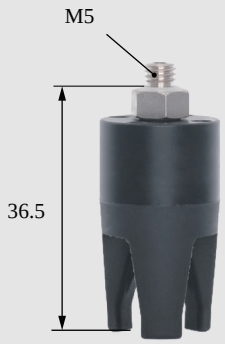

DAL Side Fitting Installation

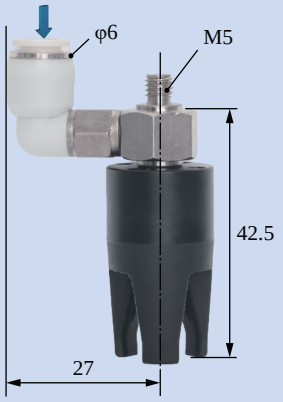

Scara Robotic Arm Installation

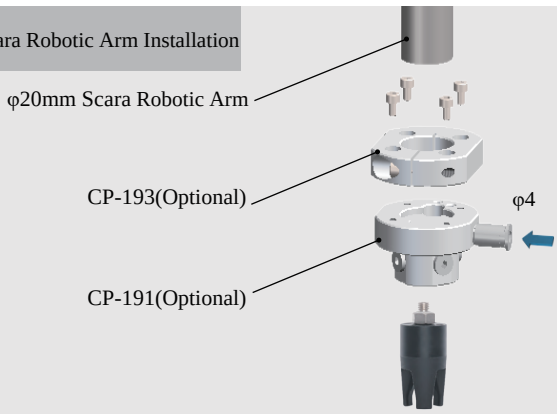

Robotic Arm Flange Side Fitting Installation

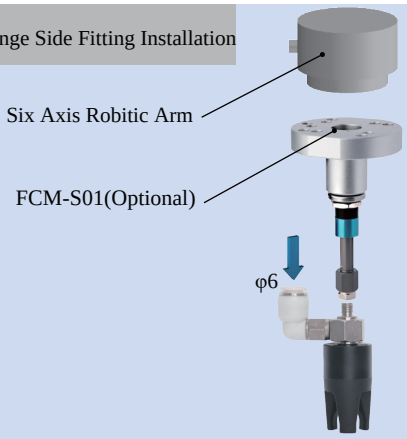

Rigid Connection Installation

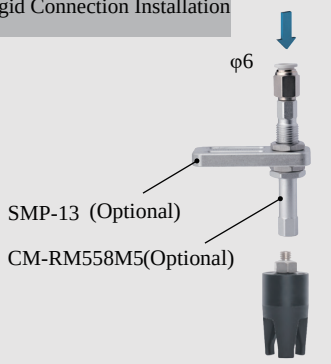

Buffer Installation



Matrix Installation

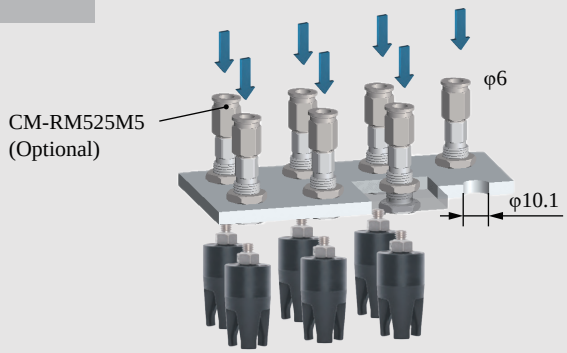

Precise Positioning Installation

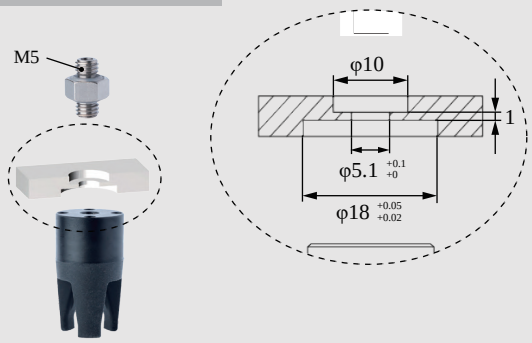

Installation of Optical Fiber Sensors

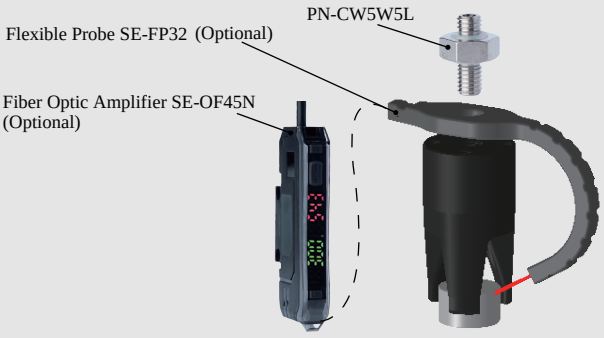



DAC-3A18[H]/S Direct-through H Type		DAL-3A18[H]/S Side-through H Type	
DAC-3A18[HAS]/S Direct-through Dust-free H Type		DAL-3A18[HAS]/S Side-through Dust-free H Type	
Weight	9.9g	**Weight**	21.4g



Product features

- The inner fingertip distance G and the outer fingertip distance D can be adjusted by using the working air pressure.
- Soft beak material is divided into Normal Material [H] and Dust-free Normal Material [HAS]. When the workpiece is light, or very soft, easy to adhere to adsorp on the soft beak, Dust-free Normal Material [HAS] is preferred.
- Food-grade material, direct food contact approved.

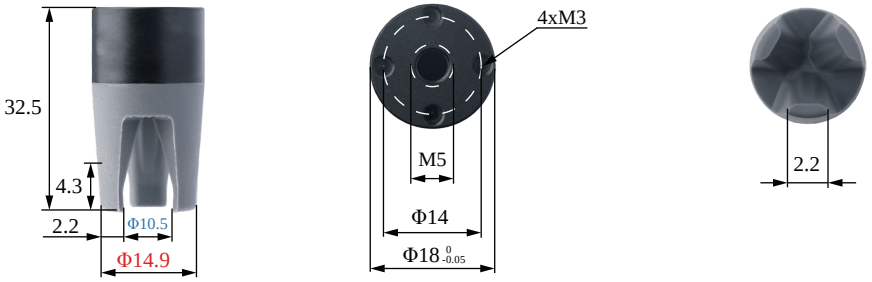



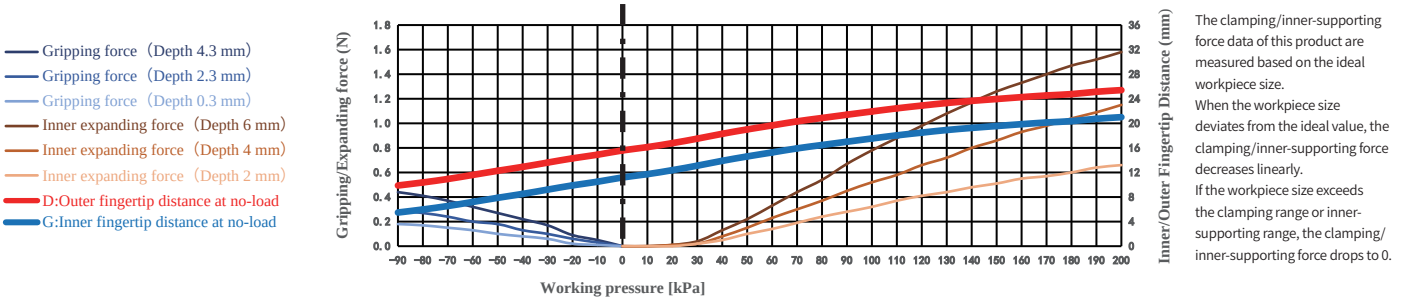

The clamping/inner-supporting force data of this product are measured based on the ideal workpiece size.
When the workpiece size deviates from the ideal value, the clamping/inner-supporting force decreases linearly.
If the workpiece size exceeds the clamping range or inner-supporting range, the clamping/inner-supporting force drops to 0.

Paremeter

Gripping range	3-12mm	Gripping force	0-0.4N	Theoretical gripping load**	0-33g	Ideal gripping workpiece size*	10.5mm
Internal gripping range	17-21mm	Internal gripping force	0-1.6N	Theoretical internal gripping load**	0-119g	Ideal internal gripping workpiece size*	17mm
Joint size	M5	Life time***	1.5 million times	Contact Temperature	<220°C	Safe pressure***	<200kPa

*: The width of the cuboid that generates the maximum gripping force (two-finger gripping), the outer diameter of the cylinder (multi-finger gripping), the width of the square hole (two-finger internal gripping), or the inner diameter of the circular hole (multi-finger internal gripping);
**: Only the theoretical load of the ideal workpiece under standard working conditions is marked for reference and comparison. The real load capacity is also affected by factors such as the surface structure and roughness of the workpiece. Please take the measured data as the standard;
***: The working air pressure and the surface roughness of the workpiece in the usage scenario may have different degrees of impact on the life-time. Please configure Rochu control Unit. Do not exceed the safe air pressure.

DAC Straight Fitting Installation

Scan to watch videos



DAL Side Fitting Installation

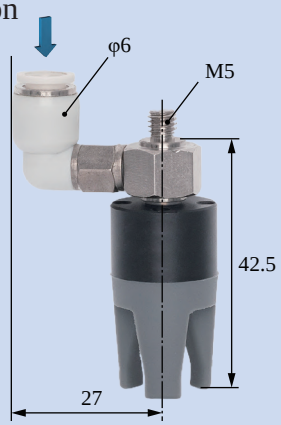

Scara Robotic Arm Installation

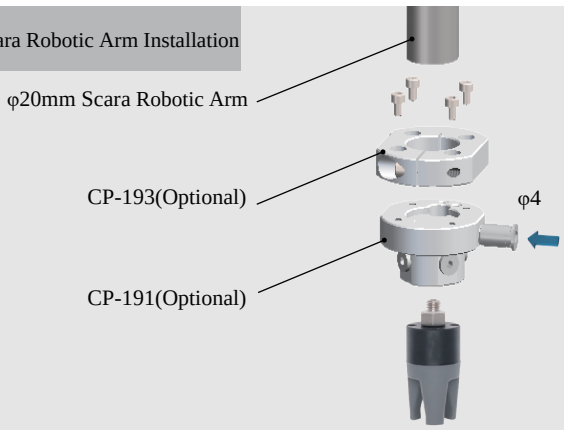

Robotic Arm Flange Side Fitting Installation

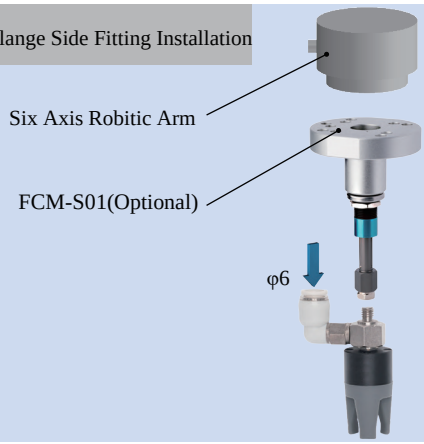

Rigid Connection Installation

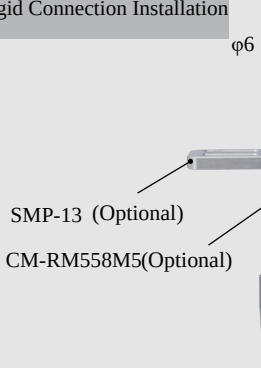

Buffer Installation

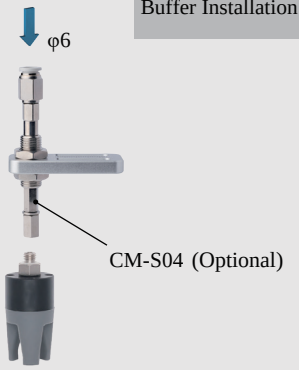

Matrix Installation

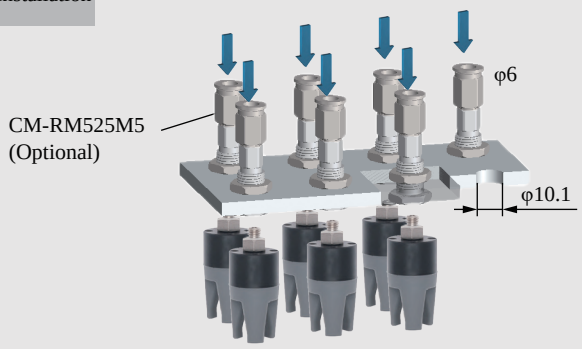

Precise Positioning Installation

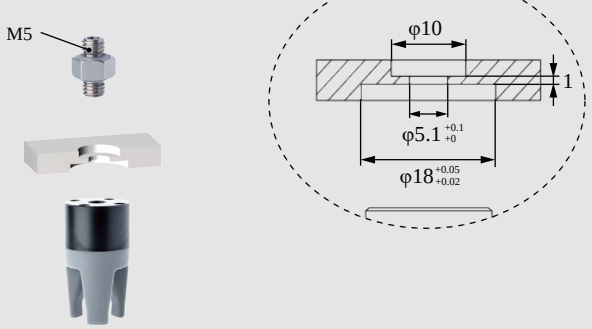

Installation of Optical Fiber Sensors





DAC-3B18[P]/S Direct-through P Type		DAL-3B18[P]/S Direct-through P Type	
DAC-3B18[PAS]/S Direct-through Dust-free P Type		DAL-3B18[PAS]/S Side-through Dust-free P Type	
Weight	8.3g	**Weight**	21.5g



Product features

- Fingertip open under pressure and clamped in a vacuum. Inner fingertips distance D can be adjusted by working pressure.It is suggested to be used with Rochu control unit.
- Soft beak material is divided into Normal Material [P] and Dust-free Normal Material [PAS]. When the workpiece is light, or very soft, easy to adhere to adsorp on the soft beak, Dust-free Normal Material [PAS] is preferred.
- Food-grade material, direct food contact approved.

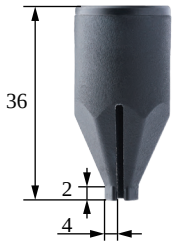

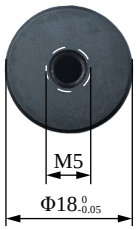

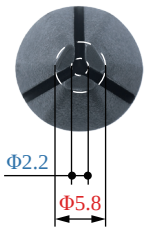









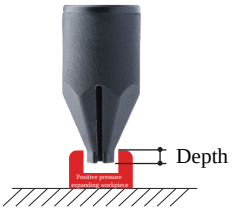

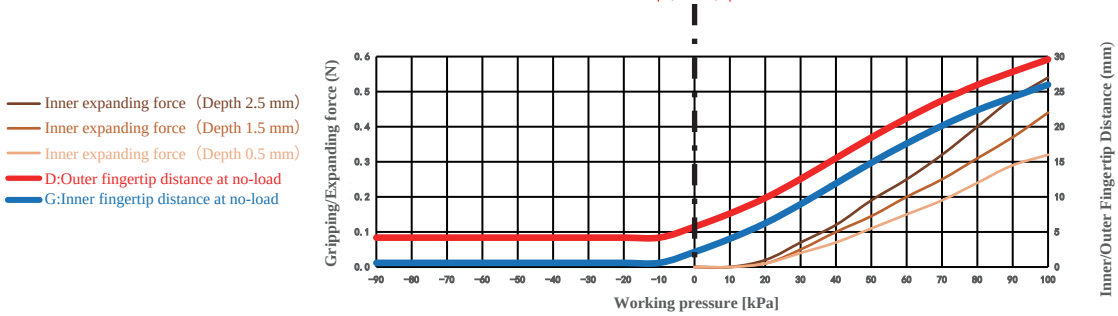

The clamping/inner-supporting force data of this product are measured based on the ideal workpiece size.
When the workpiece size deviates from the ideal value, the clamping/inner-supporting force decreases linearly.
If the workpiece size exceeds the clamping range or inner-supporting range, the clamping/inner-supporting force drops to 0.

Paremeter

Gripping range	—	Gripping force	—	Theoretical gripping load**	—	Ideal gripping workpiece size*	—
Internal gripping range	5.5-19mm	Internal gripping force	0-0.5N	Theoretical internal gripping load**	0-41g	Ideal internal gripping workpiece size*	10mm
Joint size	M5	Life time***	1.5 million times	Contact Temperature	<220°C	Safe pressure***	<100kPa

*: The width of the cuboid that generates the maximum gripping force (two-finger gripping), the outer diameter of the cylinder (multi-finger gripping), the width of the square hole (two-finger internal gripping), or the inner diameter of the circular hole (multi-finger internal gripping);
**: Only the theoretical load of the ideal workpiece under standard working conditions is marked for reference and comparison. The real load capacity is also affected by factors such as the surface structure and roughness of the workpiece. Please take the measured data as the standard;
***: The working air pressure and the surface roughness of the workpiece in the usage scenario may have different degrees of impact on the life-time. Please configure Rochu control Unit. Do not exceed the safe air pressure.

DAC Straight Fitting Installation

Scan to watch videos



DAL Side Fitting Installation

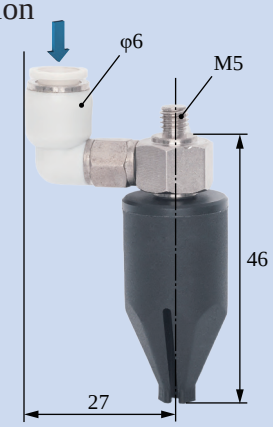

Scara Robotic Arm Installation

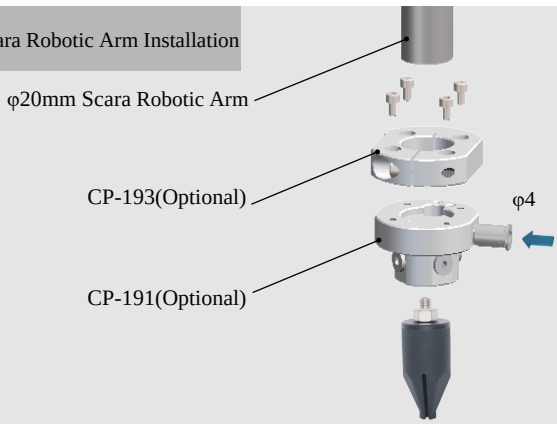

Robotic Arm Flange Side Fitting Installation

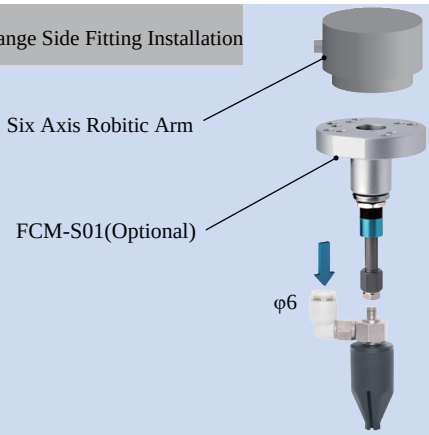

Rigid Connection Installation

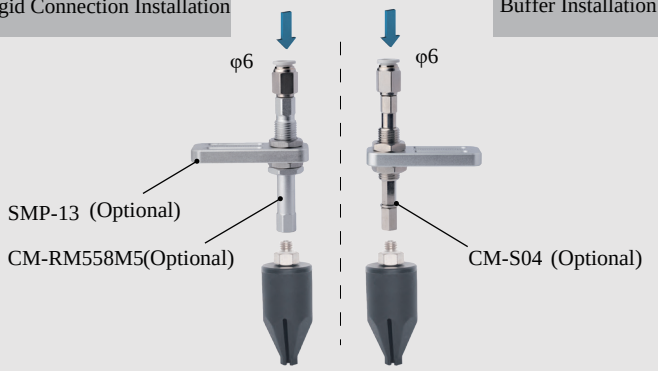

Buffer Installation

Matrix Installation

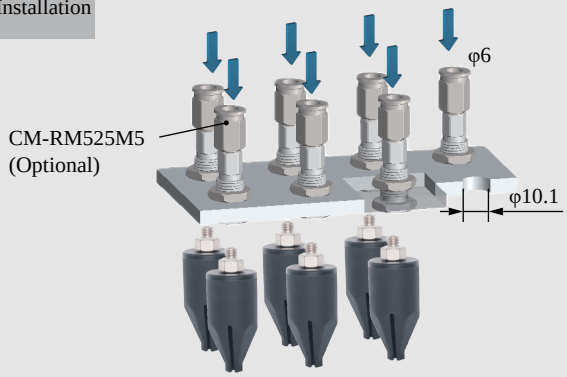

Precise Positioning Installation

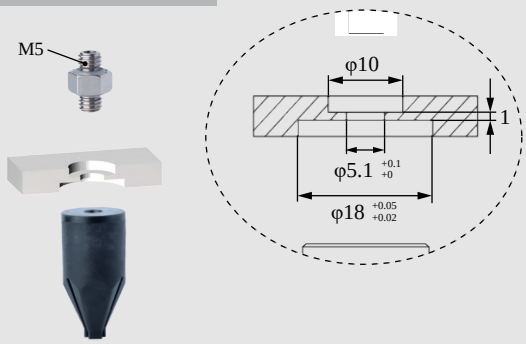

Installation of Optical Fiber Sensors



	DAC-3D20[H] Direct-through H Type		DAL-3D20[H] Side-through H Type		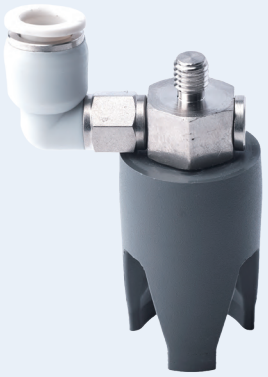
	DAC-3D20[HAS] Direct-through Dust-free H Type		DAL-3D20[HAS] Side-through Dust-free H Type		
	Weight	12.6g	Weight	21g	

- Fingertip open under pressure and clamped in a vacuum. Fingertip distance G can be adjusted by working pressure.It is suggested to be used with Rochu control unit.
- Soft beak material is divided into Normal Material [H] and Dust-free Normal Material [HAS]. When the workpiece is light, or very soft, easy to adhere to adsorp on the soft beak, Dust-free Normal Material [HAS] is preferred.
- Food-grade material, direct food contact approved.

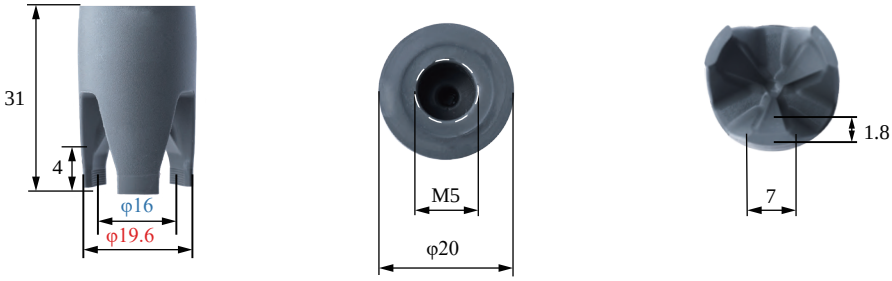

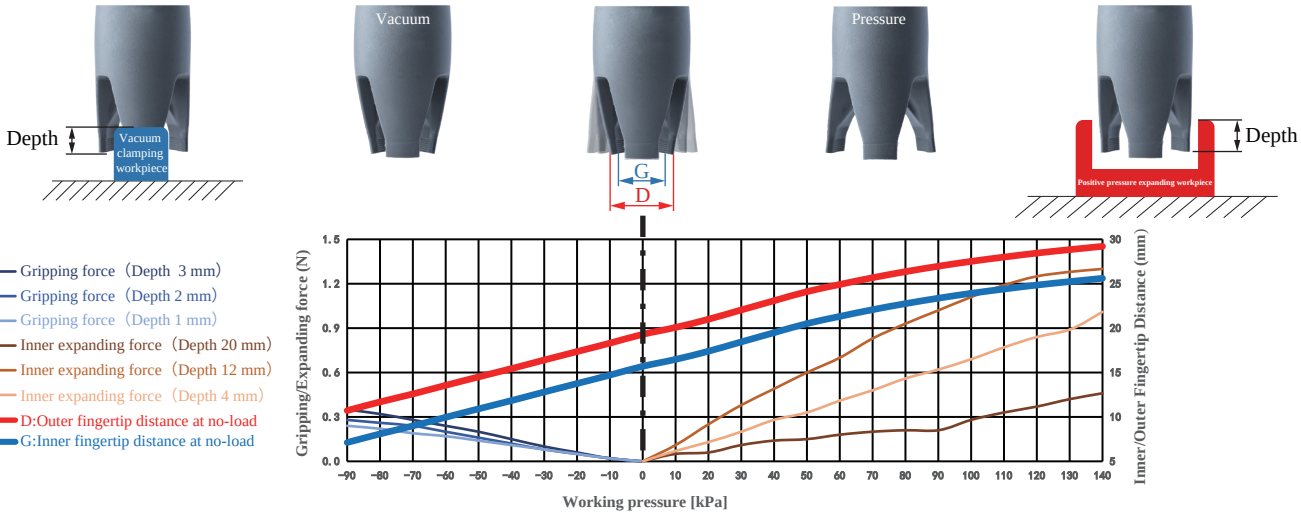

Gripping range	11-21mm	Gripping force	0-0.4N	Theoretical gripping load**	0-26g	Ideal gripping workpiece size*	16mm
Internal gripping range	20-25mm	Internal gripping force	0-1N	Theoretical internal gripping load**	0-76g	Ideal internal gripping workpiece size*	20mm
Joint size	M5	Life time***	1.5 million times	Contact Temperature	<220°C	Safe pressure***	<140kPa

DAC Straight Fitting Installation

Scan to watch videos



DAL Side Fitting Installation

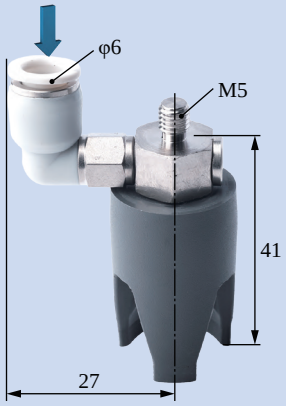

Scara Robotic Arm Installation

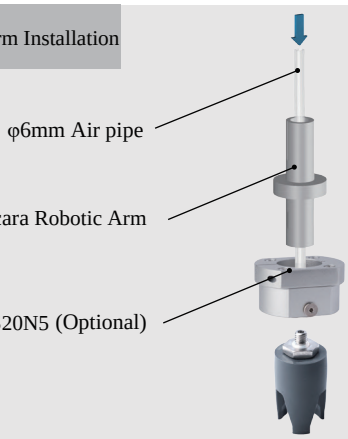

Robotic Arm Flange Side Fitting Installation

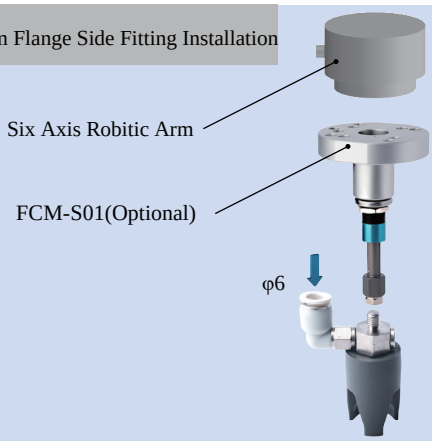

Rigid Connection Installation

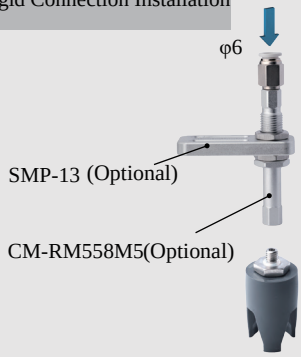

Buffer Installation



Matrix Installation

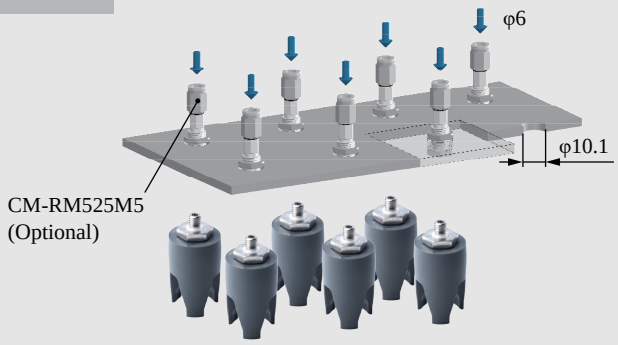

Installation of Optical Fiber Sensors

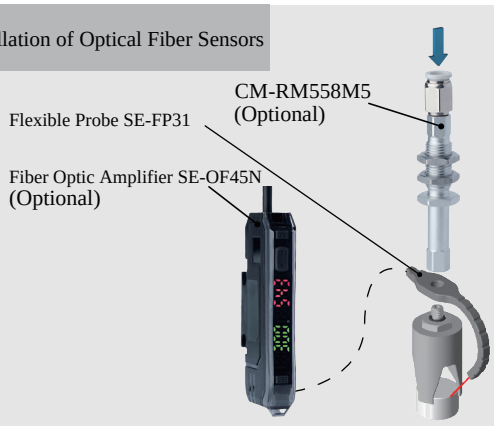

	DAC-3AB14[H] Direct-through H Type	DAL-3AB14[H] Side-through H Type	
	DAC-3AB14[HAS] Direct-through Dust-free H Type	DAL-3AB14[HAS] Side-through Dust-free H Type	
	Weight 11.3g	**Weight** 17.8g	

Product features

- Fingertip open under pressure and clamped in a vacuum. Fingertip distance G can be adjusted by working pressure.It is suggested to be used with Rochu control unit.
- Soft beak material is divided into Normal Material [H] and Dust-free Normal Material [HAS]. When the workpiece is light, or very soft, easy to adhere to adsorp on the soft beak, Dust-free Normal Material [HAS] is preferred.
- Food-grade material, direct food contact approved.

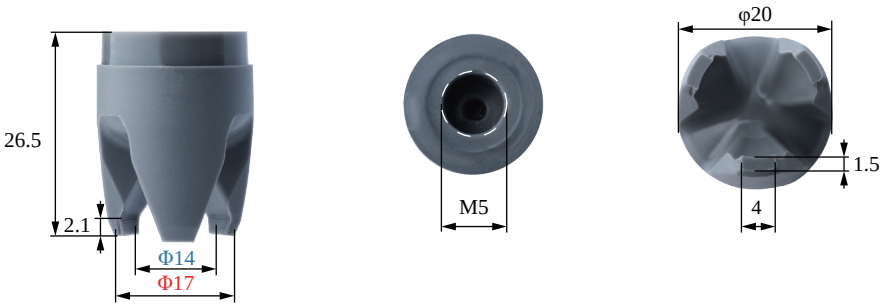

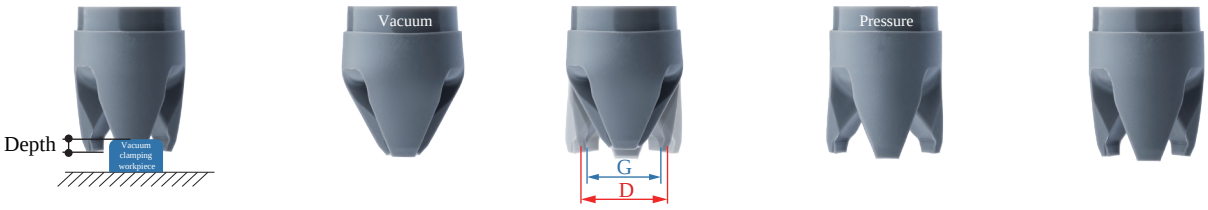

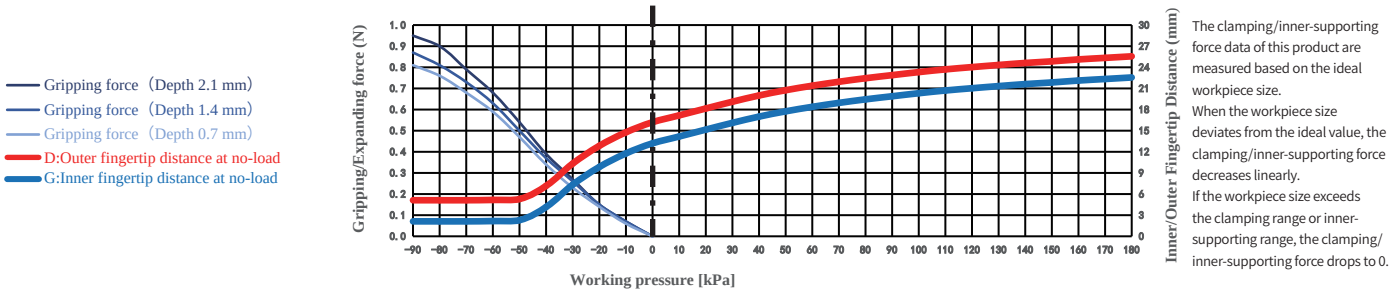

The clamping/inner-supporting force data of this product are measured based on the ideal workpiece size.
When the workpiece size deviates from the ideal value, the clamping/inner-supporting force decreases linearly.
If the workpiece size exceeds the clamping range or inner-supporting range, the clamping/inner-supporting force drops to 0.

Paremeter

Gripping range	6-17mm	Gripping force	0-1N	Theoretical gripping load**	0-71g	Ideal gripping workpiece size*	14mm
Internal gripping range	—	Internal gripping force	—	Theoretical internal gripping load**	—	Ideal internal gripping workpiece size*	—
Joint size	M5	Life time***	1.5 million times	Contact Temperature	<220℃	Safe pressure***	<180kPa

*: The width of the cuboid that generates the maximum gripping force (two-finger gripping), the outer diameter of the cylinder (multi-finger gripping), the width of the square hole (two-finger internal gripping), or the inner diameter of the circular hole (multi-finger internal gripping);
**: Only the theoretical load of the ideal workpiece under standard working conditions is marked for reference and comparison. The real load capacity is also affected by factors such as the surface structure and roughness of the workpiece. Please take the measured data as the standard;
***: The working air pressure and the surface roughness of the workpiece in the usage scenario may have different degrees of impact on the life-time. Please configure Rochu control Unit. Do not exceed the safe air pressure.

DAC Straight Fitting Installation

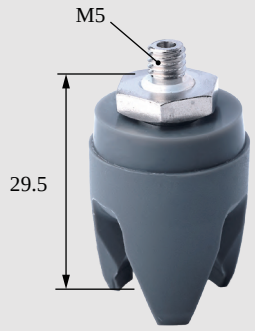

DAL Side Fitting Installation

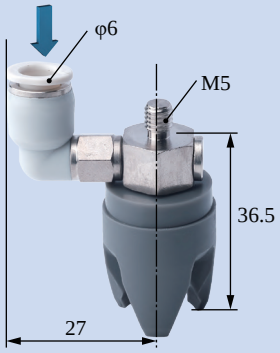

Scara Robotic Arm Installation

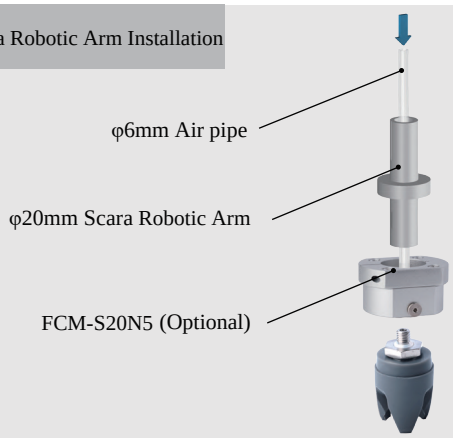

Robotic Arm Flange Side Fitting Installation

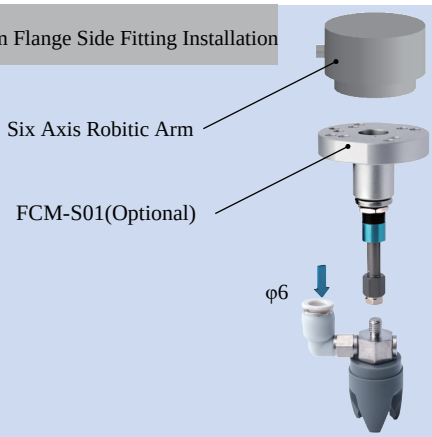

Rigid Connection Installation



Buffer Installation

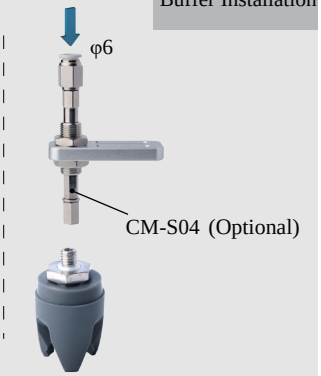

Matrix Installation

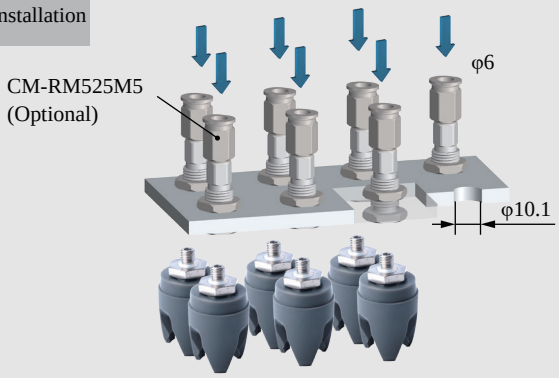

Installation of Optical Fiber Sensors

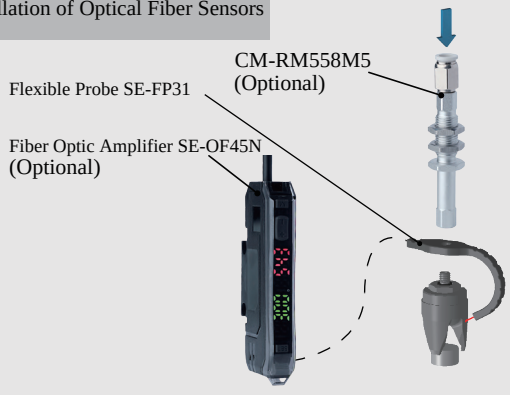



DAC-3G20[H]/S Direct-through H Type	DAL-3G20[H]/S Side-through H Type
DAC-3G20[HAS]/S Direct-through Dust-free H Type	DAL-3G20[HAS]/S Side-through Dust-free H Type



Weight	8.4g	Weight	19.9g

Product features

- Fingertip open under pressure and clamped in a vacuum. Fingertip distance G can be adjusted by working pressure.It is suggested to be used with Rochu control unit.
- Soft beak material is divided into Normal Material [H] and Dust-free Normal Material [HAS]. When the workpiece is light, or very soft, easy to adhere to adsorp on the soft beak, Dust-free Normal Material [HAS] is preferred.
- Food-grade material, direct food contact approved.



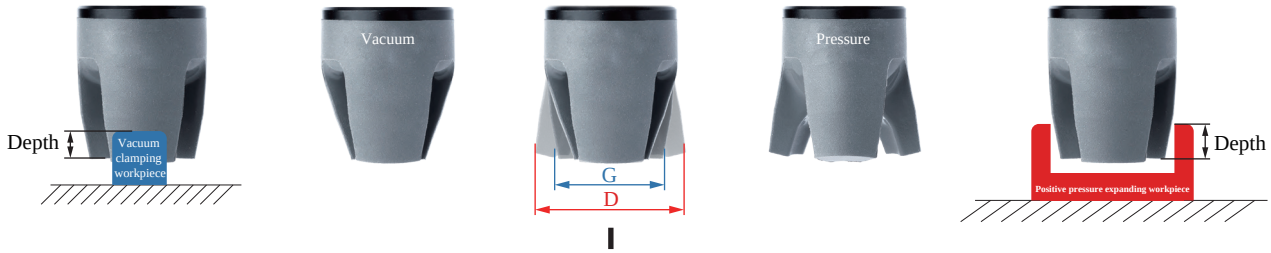

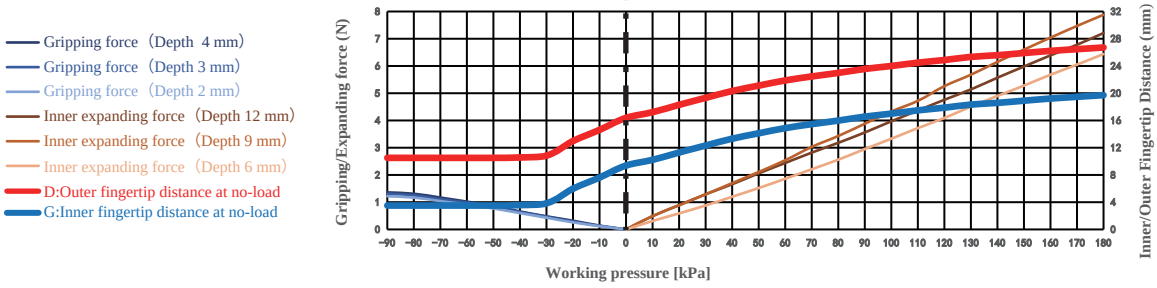

The clamping/inner-supporting force data of this product are measured based on the ideal workpiece size.
When the workpiece size deviates from the ideal value, the clamping/inner-supporting force decreases linearly.
If the workpiece size exceeds the clamping range or inner-supporting range, the clamping/inner-supporting force drops to 0.

Paremeter

Gripping range	5-12mm	Gripping force	0-1.4N	Theoretical gripping load**	0-102g	Ideal gripping workpiece size*	10mm
Internal gripping range	17-21mm	Internal gripping force	0-7.9N	Theoretical internal gripping load**	0-591g	Ideal internal gripping workpiece size*	20mm
Joint size	M5	Life time***	1.5 million times	Contact Temperature	<220℃	Safe pressure***	<180kPa

*: The width of the cuboid that generates the maximum gripping force (two-finger gripping), the outer diameter of the cylinder (multi-finger gripping), the width of the square hole (two-finger internal gripping), or the inner diameter of the circular hole (multi-finger internal gripping);
**: Only the theoretical load of the ideal workpiece under standard working conditions is marked for reference and comparison. The real load capacity is also affected by factors such as the surface structure and roughness of the workpiece. Please take the measured data as the standard;
***: The working air pressure and the surface roughness of the workpiece in the usage scenario may have different degrees of impact on the life-time. Please configure Rochu control Unit. Do not exceed the safe air pressure.

DAC Straight Fitting Installation

Scan to watch videos



DAL Side Fitting Installation



Scara Robotic Arm Installation

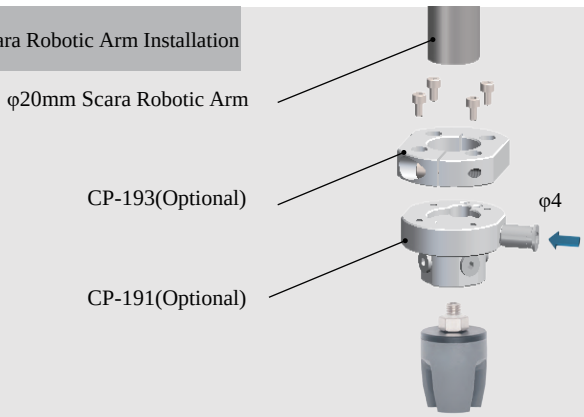

Robotic Arm Flange Side Fitting Installation

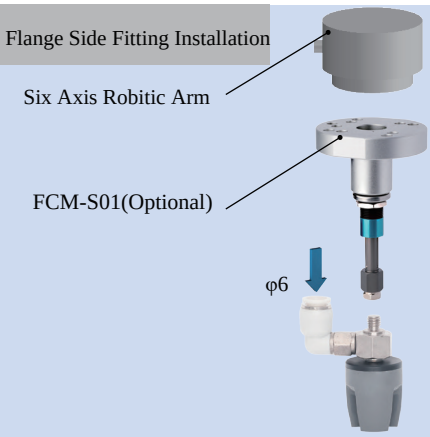

Rigid Connection Installation

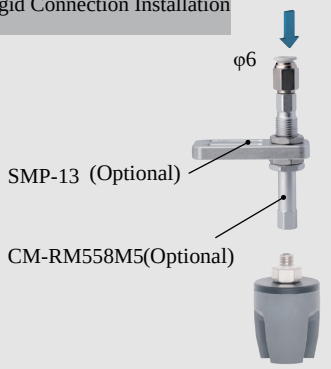

Buffer Installation

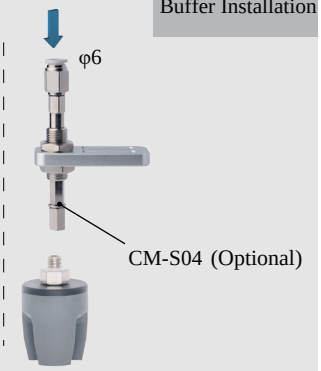

Matrix Installation

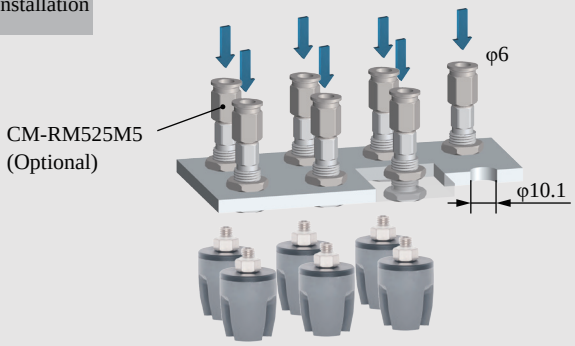

Precise Positioning Installation

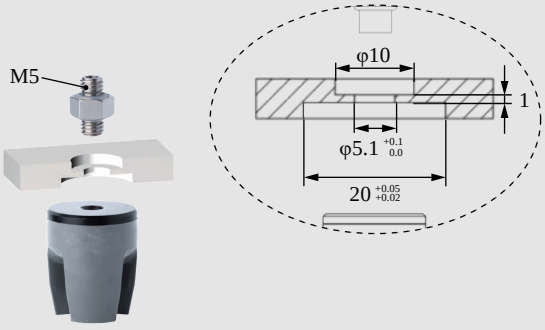

Installation of Optical Fiber Sensors



B-3G20[H]/S

DAC-3GN20[H]/S Direct-through H Type		DAL-3GN20[H]/S Side-through H Type	
			
Weight	9.5g	**Weight**	20.5g

Product features

- Fingertips open under positive pressure and clamp under vacuum.The inner fingertip distance G and outer fingertip distance D can be adjusted by working air pressure.It is recommended to use with a Soft Touch driver.
- Suitable for workpieces with complex shapes. Profiled fingertips tailored to the workpiece geometry can be designed and installed via the threaded holes on the soft gripper fingers. The profiled fingertips can be made of rigid materials such as plastic or metal, selected according to the workpiece requirements.

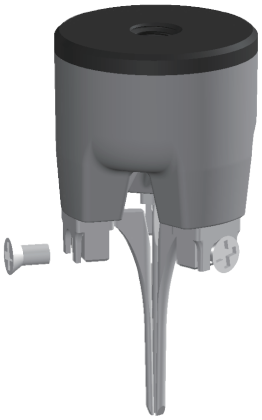

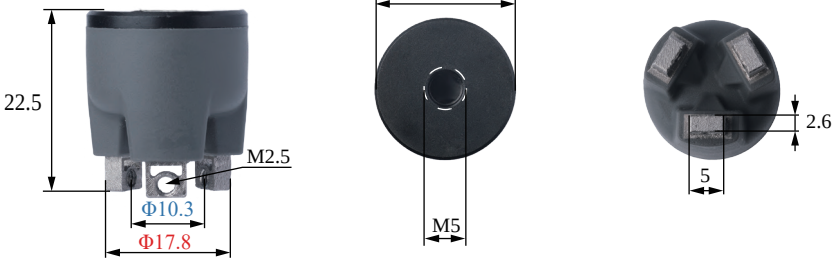



B-3GN20[H]/S

Paremeter

Gripping range	—	Gripping force	—	Theoretical gripping load**	—	Ideal gripping workpiece size*	—
Internal gripping range	2-20mm	Internal gripping force	0-1.2N	Theoretical internal gripping load**	0-90g	Ideal internal gripping workpiece size*	5mm
Joint size	M5	Life time***	1.5 million times	Contact Temperature	<220°C	Safe pressure***	<120kPa

*: The width of the cuboid that generates the maximum gripping force (two-finger gripping), the outer diameter of the cylinder (multi-finger gripping), the width of the square hole (two-finger internal gripping), or the inner diameter of the circular hole (multi-finger internal gripping);
**: Only the theoretical load of the ideal workpiece under standard working conditions is marked for reference and comparison. The real load capacity is also affected by factors such as the surface structure and roughness of the workpiece. Please take the measured data as the standard;
***: The working air pressure and the surface roughness of the workpiece in the usage scenario may have different degrees of impact on the life-time. Please configure Rochu control Unit. Do not exceed the safe air pressure.

DAC Straight Fitting Installation

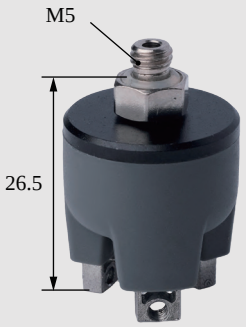

DAL Side Fitting Installation

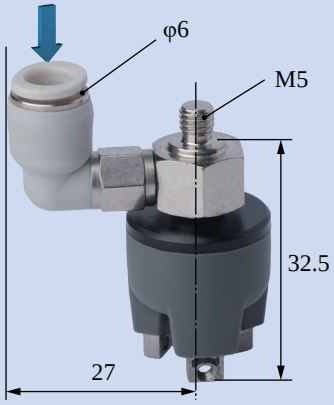

Scara Robotic Arm Installation

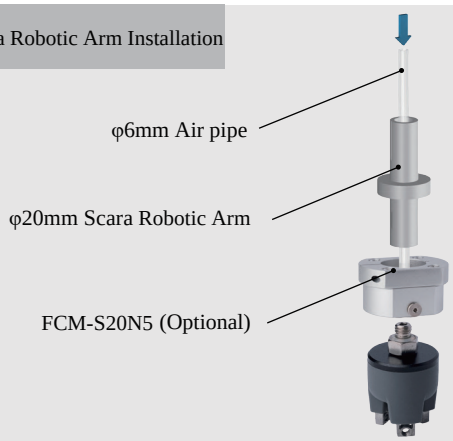

Robotic Arm Flange Side Fitting Installation

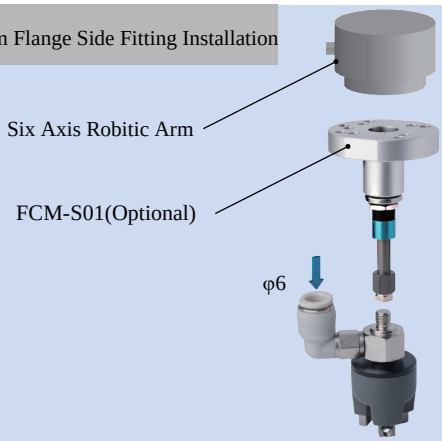

Rigid Connection Installation

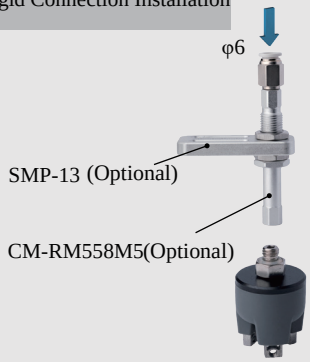

Buffer Installation



Matrix Installation

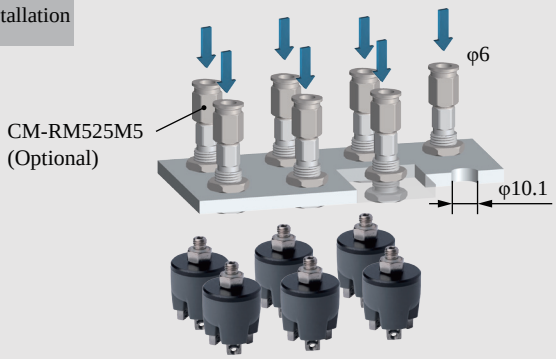

Precise Positioning Installation

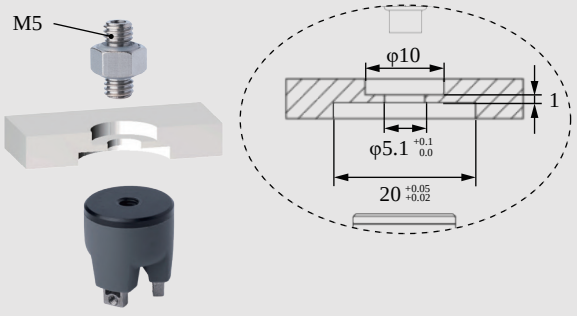

Installation of Optical Fiber Sensors

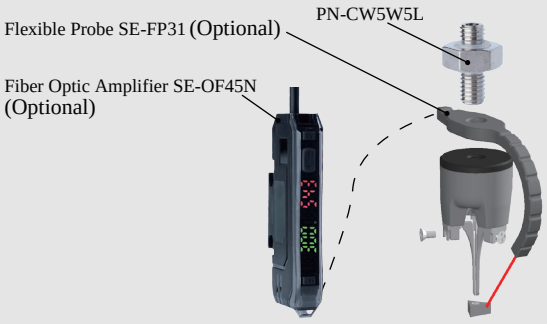



DAC-3SA20[H]/S Direct-through H Type		DAL-3SA20[H]/S Side-through H Type	
DAC-3SA20[HAS]/S Direct-through Dust-free H Type		DAL-3SA20[HAS]/S Side-through Dust-free H Type	
Weight	8.5g	**Weight**	20g



Product features

- Fingertip open under pressure and clamped in a vacuum. Fingertip distance G can be adjusted by working pressure.It is suggested to be used with Rochu control unit.
- Soft beak material is divided into Normal Material [H] and Dust-free Normal Material [HAS]. When the workpiece is light, or very soft, easy to adhere to adsorp on the soft beak, Dust-free Normal Material [HAS] is preferred.
- Food-grade material, direct food contact approved.

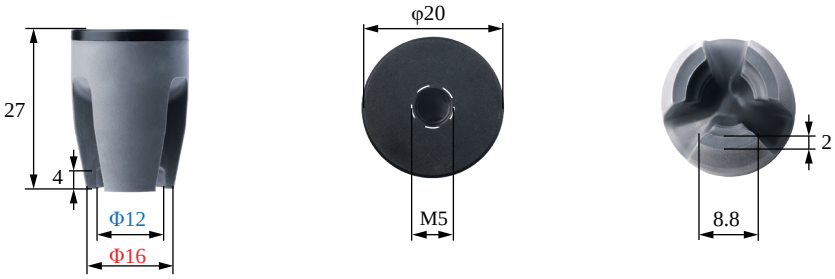

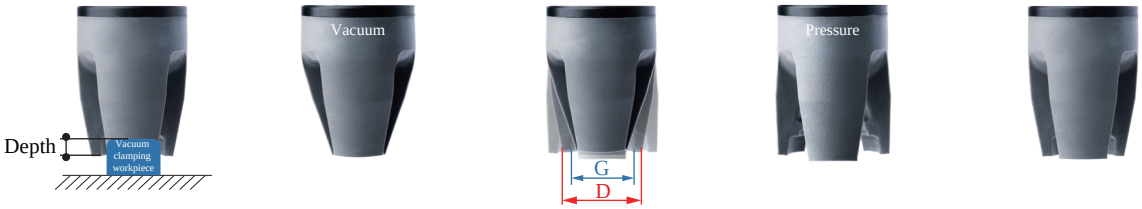

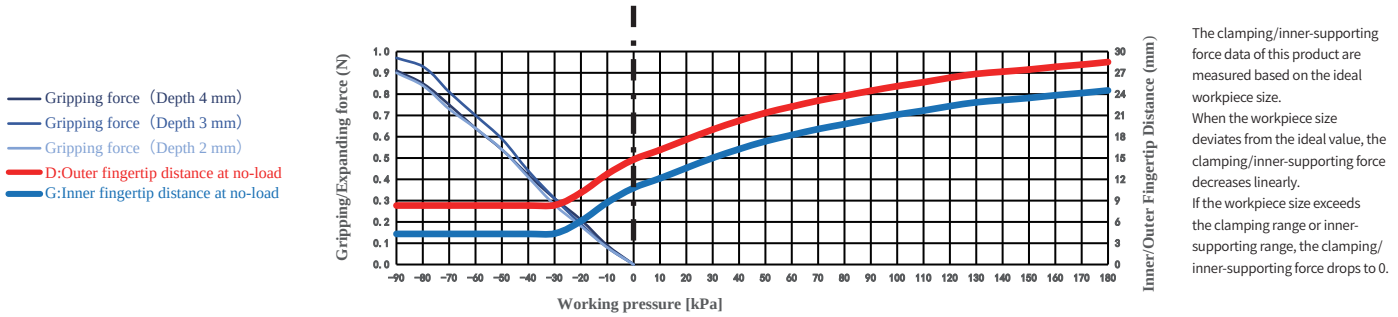

The clamping/inner-supporting force data of this product are measured based on the ideal workpiece size.
When the workpiece size deviates from the ideal value, the clamping/inner-supporting force decreases linearly.
If the workpiece size exceeds the clamping range or inner-supporting range, the clamping/inner-supporting force drops to 0.

Paremeter

Gripping range	6-12mm	Gripping force	0-0.9N	Theoretical gripping load**	0-68g	Ideal gripping workpiece size*	10mm
Internal gripping range	—	Internal gripping force	—	Theoretical internal gripping load**	—	Ideal internal gripping workpiece size*	—
Joint size	M5	Life time***	1.5 million times	Contact Temperature	<220°C	Safe pressure***	<180kPa

*: The width of the cuboid that generates the maximum gripping force (two-finger gripping), the outer diameter of the cylinder (multi-finger gripping), the width of the square hole (two-finger internal gripping), or the inner diameter of the circular hole (multi-finger internal gripping);
**: Only the theoretical load of the ideal workpiece under standard working conditions is marked for reference and comparison. The real load capacity is also affected by factors such as the surface structure and roughness of the workpiece. Please take the measured data as the standard;
***: The working air pressure and the surface roughness of the workpiece in the usage scenario may have different degrees of impact on the life-time. Please configure Rochu control Unit. Do not exceed the safe air pressure.

DAC Straight Fitting Installation



DAL Side Fitting Installation

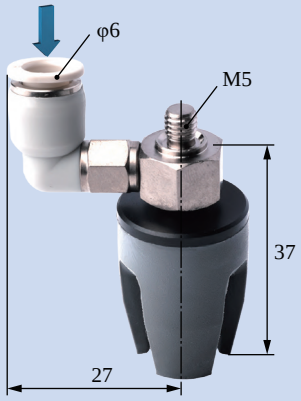

Scara Robotic Arm Installation

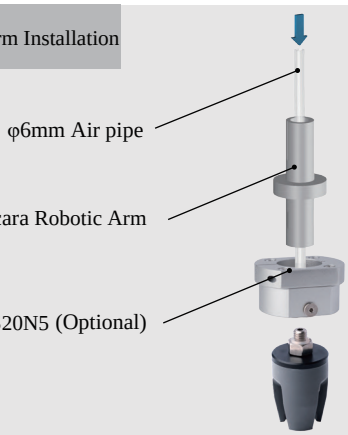

Robotic Arm Flange Side Fitting Installation

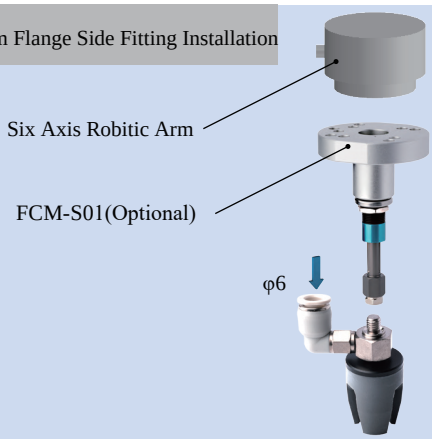

Rigid Connection Installation



Buffer Installation

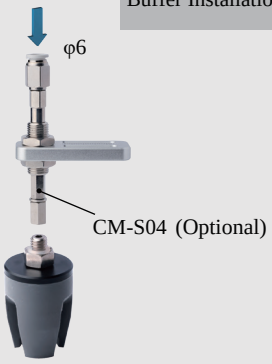

Matrix Installation

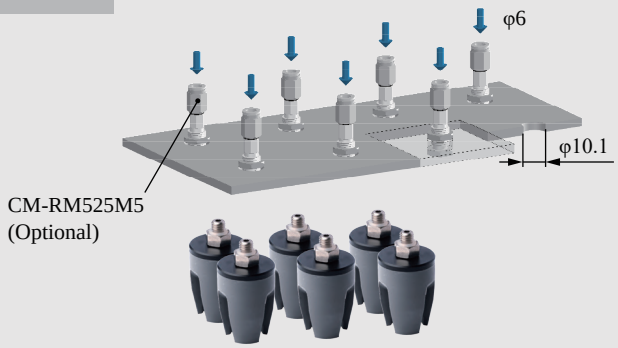

Precise Positioning Installation

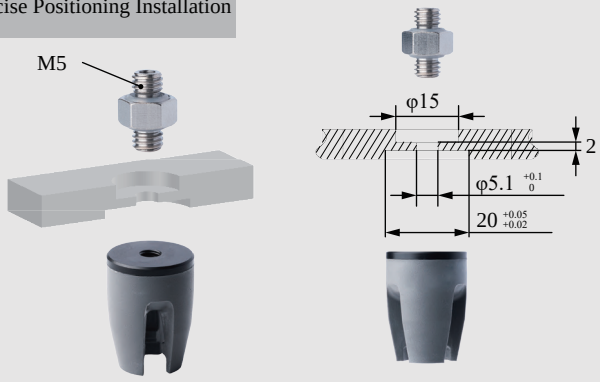

Installation of Optical Fiber Sensors





DAC-3D20[H] Direct-through H Type		DAL-3D20[H] Side-through H Type	
DAC-3D20[HAS] Direct-through Dust-free H Type		DAL-3D20[HAS] Side-through Dust-free H Type	
Weight	12.6g	**Weight**	21g

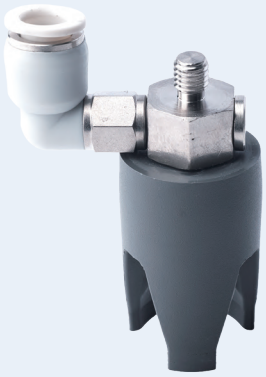

Product features

- Fingertip open under pressure and clamped in a vacuum. Fingertip distance G can be adjusted by working pressure.It is suggested to be used with Rochu control unit.
- Soft beak material is divided into Normal Material [H] and Dust-free Normal Material [HAS]. When the workpiece is light, or very soft, easy to adhere to adsorp on the soft beak, Dust-free Normal Material [HAS] is preferred.
- Food-grade material, direct food contact approved.

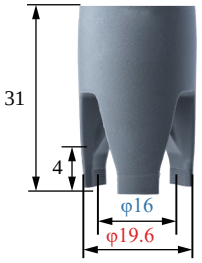

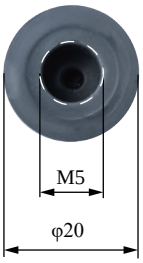

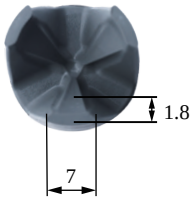

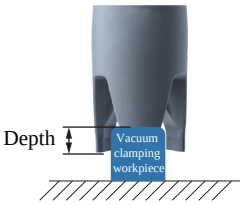







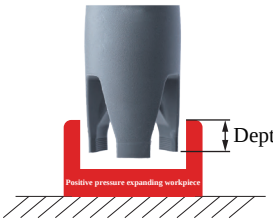

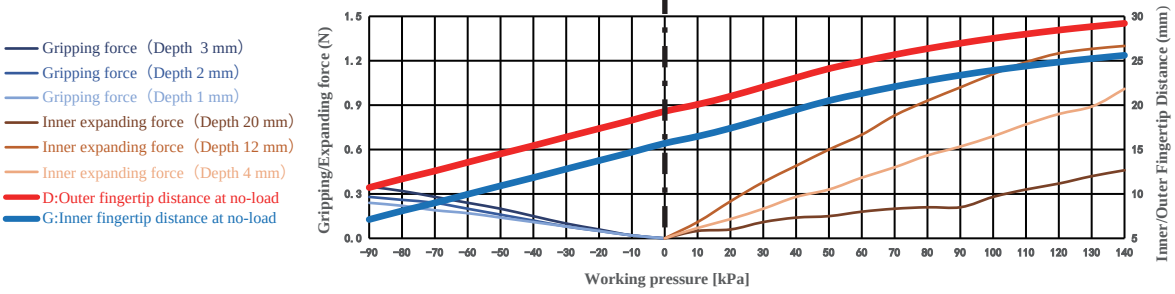

The clamping/inner-supporting force data of this product are measured based on the ideal workpiece size.
When the workpiece size deviates from the ideal value, the clamping/inner-supporting force decreases linearly.
If the workpiece size exceeds the clamping range or inner-supporting range, the clamping/inner-supporting force drops to 0.

Paremeter

Gripping range	11-21mm	Gripping force	0-0.4N	Theoretical gripping load**	0-26g	Ideal gripping workpiece size*	16mm
Internal gripping range	20-25mm	Internal gripping force	0-1N	Theoretical internal gripping load**	0-76g	Ideal internal gripping workpiece size*	20mm
Joint size	M5	Life time***	1.5 million times	Contact Temperature	<220°C	Safe pressure***	<140kPa

*: The width of the cuboid that generates the maximum gripping force (two-finger gripping), the outer diameter of the cylinder (multi-finger gripping), the width of the square hole (two-finger internal gripping), or the inner diameter of the circular hole (multi-finger internal gripping);
**: Only the theoretical load of the ideal workpiece under standard working conditions is marked for reference and comparison. The real load capacity is also affected by factors such as the surface structure and roughness of the workpiece. Please take the measured data as the standard;
***: The working air pressure and the surface roughness of the workpiece in the usage scenario may have different degrees of impact on the life-time. Please configure Rochu control Unit. Do not exceed the safe air pressure.

DAC Straight Fitting Installation

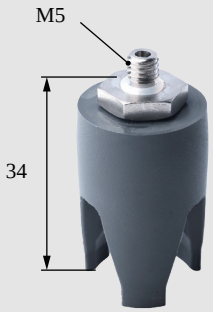

DAL Side Fitting Installation

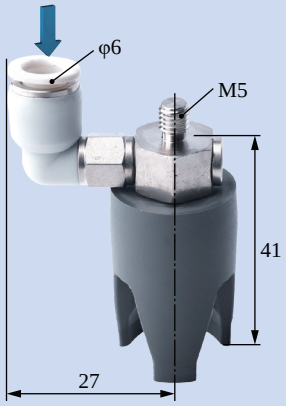

Scara Robotic Arm Installation

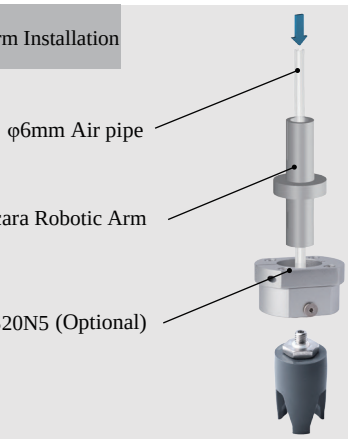

Robotic Arm Flange Side Fitting Installation

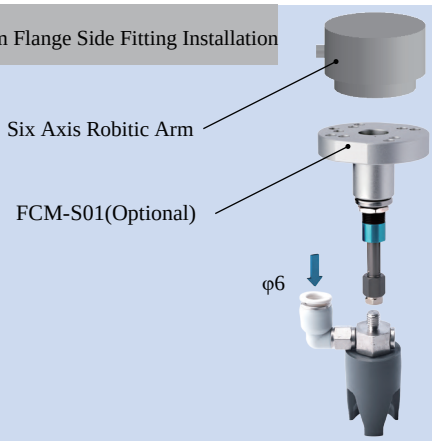

Rigid Connection Installation

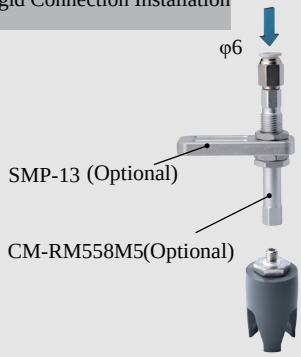

Buffer Installation



Matrix Installation

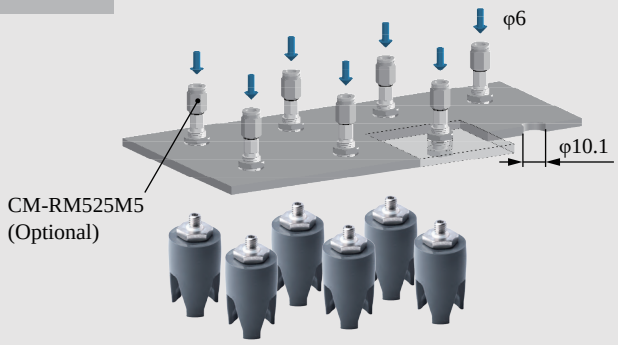

Installation of Optical Fiber Sensors

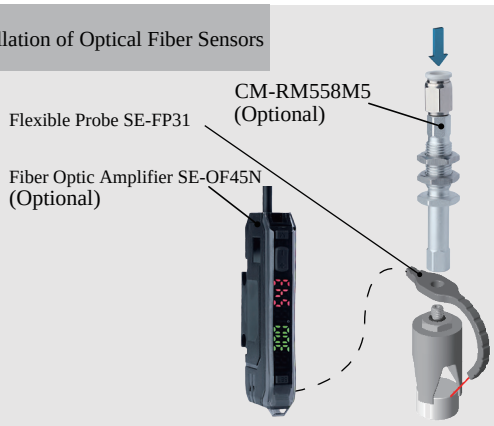



DAC-3B24[H]/S Direct-through H Type	DAL-3B24[H]/S Side-through H Type
DAC-3B24[HAS]/S Direct-through Dust-free H Type	DAL-3B24[HAS]/S Side-through Dust-free H Type
Weight 20g	**Weight** 34g



Product features

- Fingertip open under pressure and clamped in a vacuum. Fingertip distance G can be adjusted by working pressure.It is suggested to be used with Rochu control unit.
- Soft beak material is divided into Normal Material [H] and Dust-free Normal Material [HAS]. When the workpiece is light, or very soft, easy to adhere to adsorp on the soft beak, Dust-free Normal Material [HAS] is preferred.
- Food-grade material, direct food contact approved.

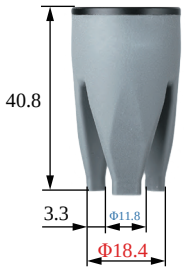



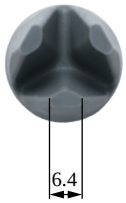

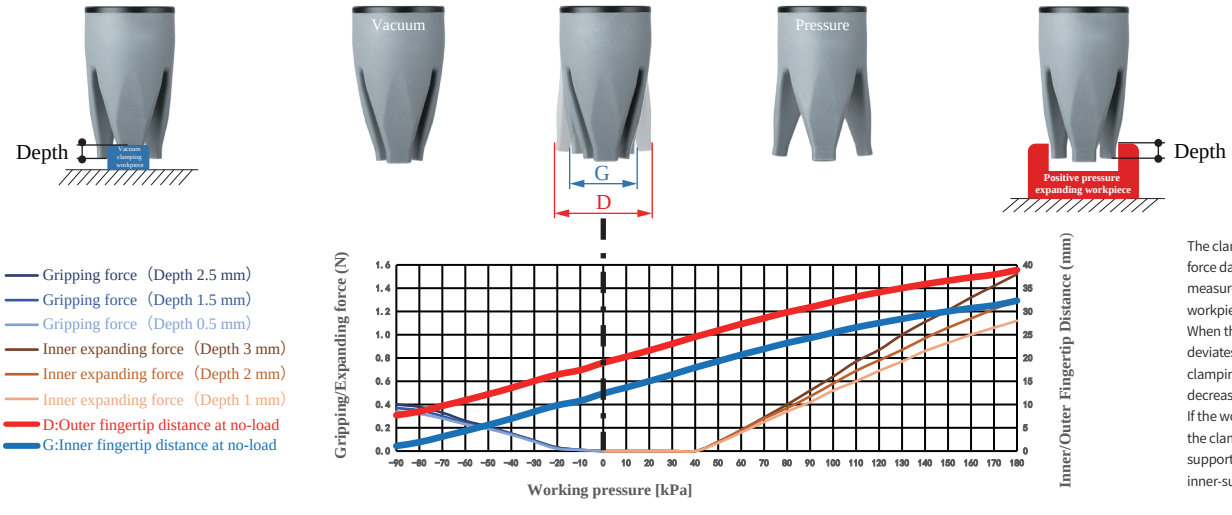

The clamping/inner-supporting force data of this product are measured based on the ideal workpiece size.
When the workpiece size deviates from the ideal value, the clamping/inner-supporting force decreases linearly.
If the workpiece size exceeds the clamping range or inner-supporting range, the clamping/inner-supporting force drops to 0.

Paremeter

Gripping range	3.5-12mm	Gripping force	0-0.4N	Theoretical gripping load**	0-30g	Ideal gripping workpiece size*	10mm
Internal gripping range	15-29mm	Internal gripping force	0-1.5N	Theoretical internal gripping load**	0-114g	Ideal internal gripping workpiece size*	25mm
Joint size	M5	Life time***	1.5 million times	Contact Temperature	<220℃	Safe pressure***	<180kPa

*: The width of the cuboid that generates the maximum gripping force (two-finger gripping), the outer diameter of the cylinder (multi-finger gripping), the width of the square hole (two-finger internal gripping), or the inner diameter of the circular hole (multi-finger internal gripping);
**: Only the theoretical load of the ideal workpiece under standard working conditions is marked for reference and comparison. The real load capacity is also affected by factors such as the surface structure and roughness of the workpiece. Please take the measured data as the standard;
***: The working air pressure and the surface roughness of the workpiece in the usage scenario may have different degrees of impact on the life-time. Please configure Rochu control Unit. Do not exceed the safe air pressure.

DAC Straight Fitting Installation

Scan to watch videos



DAL Side Fitting Installation

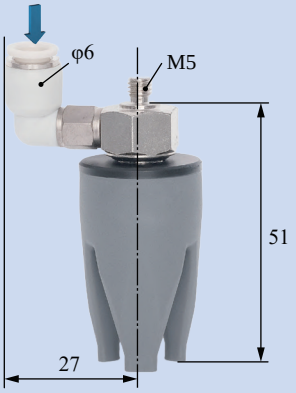

Scara Robotic Arm Installation

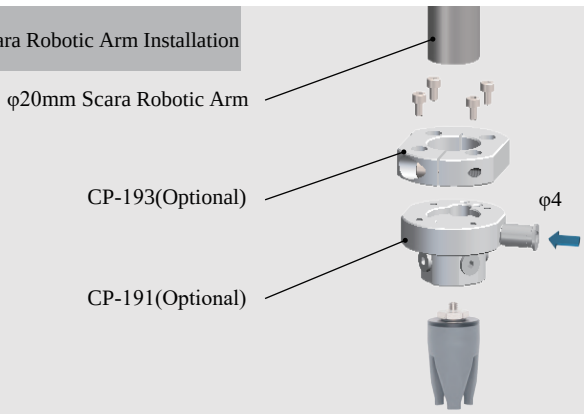

Robotic Arm Flange Side Fitting Installation

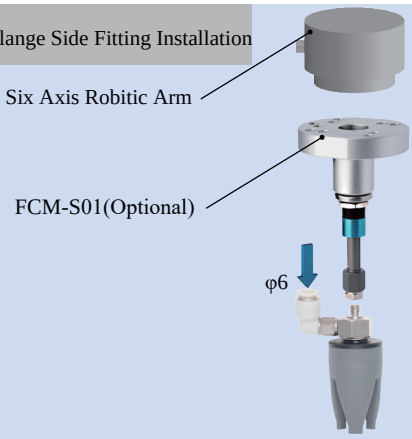

Rigid Connection Installation

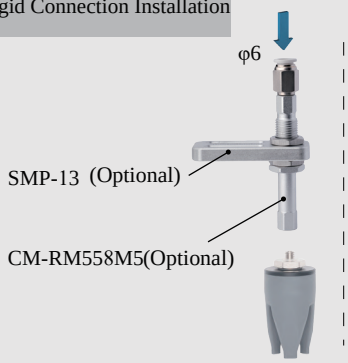

Buffer Installation

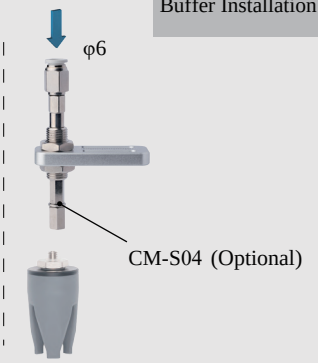

Matrix Installation

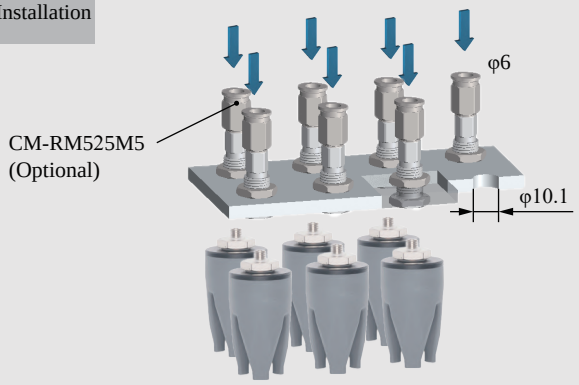

Precise Positioning Installation

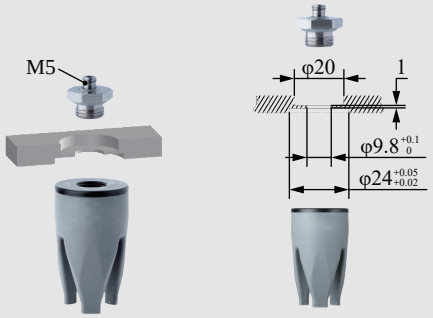

Installation of Optical Fiber Sensors





DAC-3B24[LH]/S Direct-through Anti-static H Type		DAL-3B24[LH]/S Side-through Anti-static H Type	
DAC-3B24[LHAS]/S Direct-through Anti-static Dust-free H Type		DAL-3B24[LHAS]/S Side-through Anti-static Dust-free H Type	
Weight	20g	**Weight**	34g



Product features

- Fingertips open under pressure state and clamp in a vacuum. Inner fingertips distance G and outer fingertips distance D can be adjusted by working pressure.It is suggested to be used with Rochu control unit.
- The Anti-static material meets the requirements of the national standard GB/T11210-2014, with a point-to-point resistance of 0.1-1000MΩ. The Anti-static Dust-free type [LHAS] is more suitable for dealing with workpieces that have dustproof requirements or are miniature and lightweight.

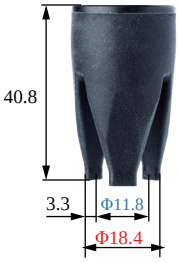





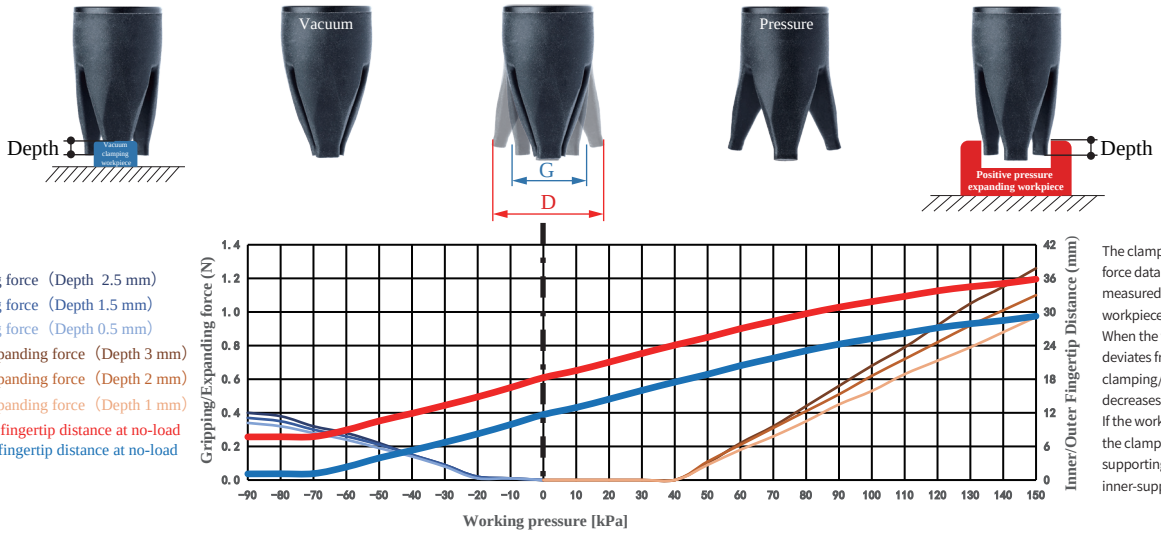

The clamping/inner-supporting force data of this product are measured based on the ideal workpiece size.
When the workpiece size deviates from the ideal value, the clamping/inner-supporting force decreases linearly.
If the workpiece size exceeds the clamping range or inner-supporting range, the clamping/inner-supporting force drops to 0.

Paremeter

Gripping range	3.5-12mm	Gripping force	0-0.4N	Theoretical gripping load**	0-30g	Ideal gripping workpiece size*	10mm
Internal gripping range	15-29mm	Internal gripping force	0-1.3N	Theoretical internal gripping load**	0-95g	Ideal internal gripping workpiece size*	25mm
Joint size	M5	Life time***	1.5 million times	Contact Temperature	<220℃	Safe pressure***	<150kPa

*: The width of the cuboid that generates the maximum gripping force (two-finger gripping), the outer diameter of the cylinder (multi-finger gripping), the width of the square hole (two-finger internal gripping), or the inner diameter of the circular hole (multi-finger internal gripping);
**: Only the theoretical load of the ideal workpiece under standard working conditions is marked for reference and comparison. The real load capacity is also affected by factors such as the surface structure and roughness of the workpiece. Please take the measured data as the standard;
***: The working air pressure and the surface roughness of the workpiece in the usage scenario may have different degrees of impact on the life-time. Please configure Rochu control Unit. Do not exceed the safe air pressure.

DAC Straight Fitting Installation

Scan to watch videos



DAL Side Fitting Installation

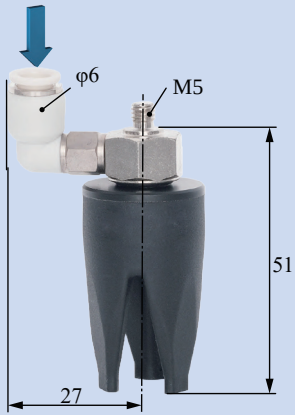

Scara Robotic Arm Installation

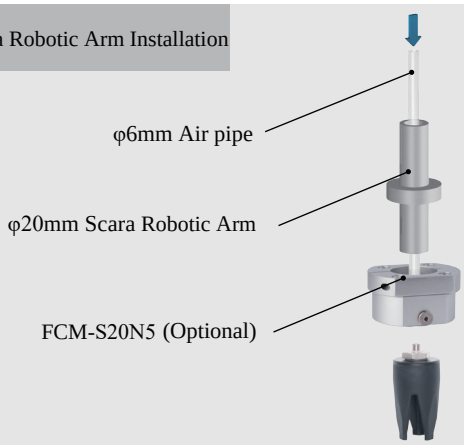

Robotic Arm Flange Side Fitting Installation

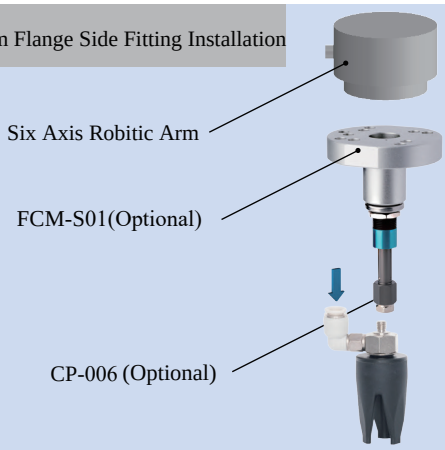

Rigid Connection Installation

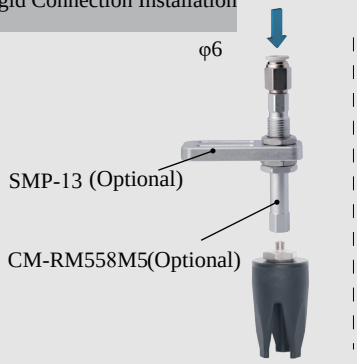

Buffer Installation

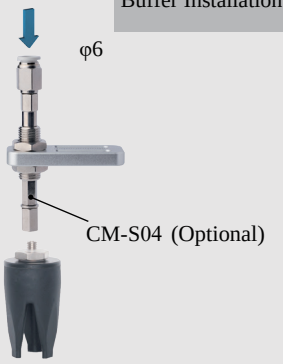

Matrix Installation

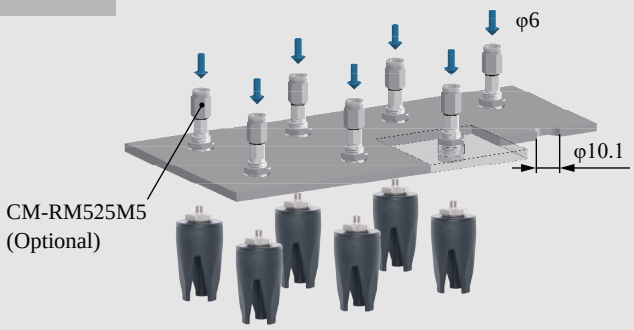

Precise Positioning Installation

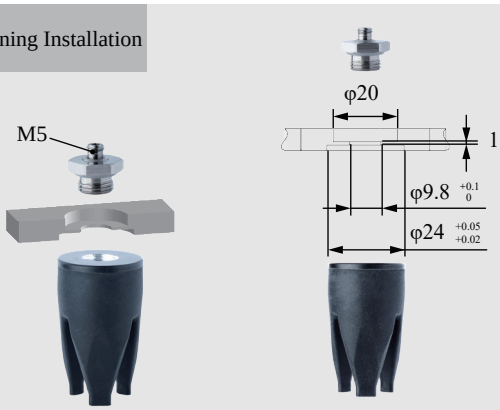

Installation of Optical Fiber Sensors



	DAC-3C24[P]/S Direct-through P Type		DAL-3C24[P]/S Direct-through P Type	
	DAC-3C24[PAS]/S Direct-through Dust-free P Type		DAL-3C24[PAS]/S Side-through Dust-free P Type	
	Weight	16.5g	**Weight**	28.8g

Product features

- Fingertip open under pressure and clamped in a vacuum. Fingertip distance G can be adjusted by working pressure.It is suggested to be used with Rochu control unit.
- Soft beak material is divided into Normal Material [P] and Dust-free Normal Material [PAS]. When the workpiece is light, or very soft, easy to adhere to adsorp on the soft beak, Dust-free Normal Material [PAS] is preferred.
- Food-grade material, direct food contact approved.

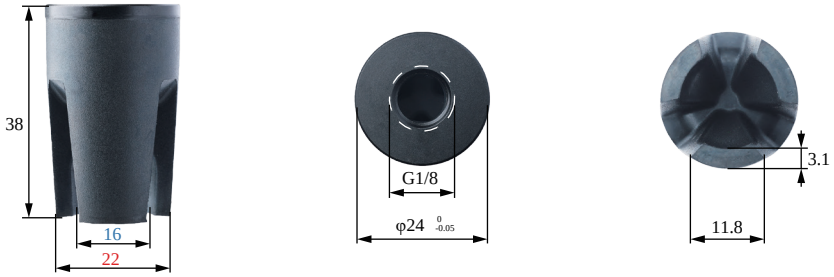

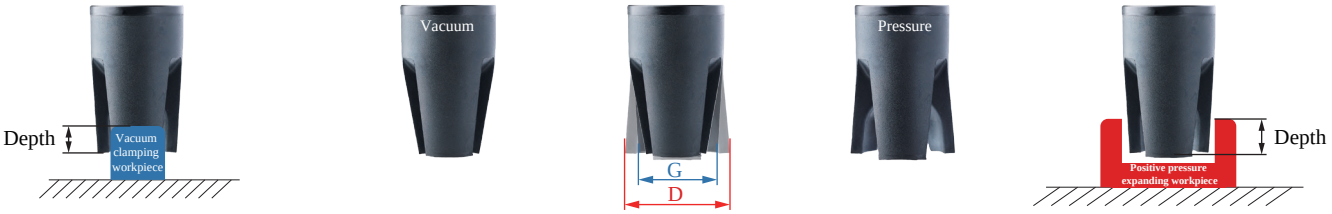

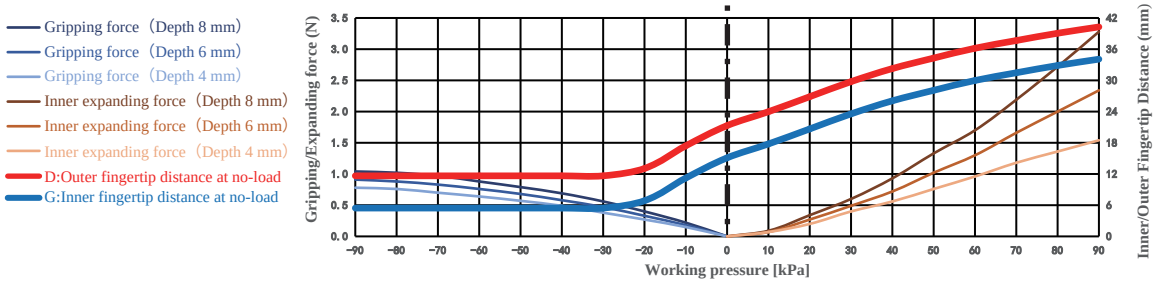

The clamping/inner-supporting force data of this product are measured based on the ideal workpiece size.
When the workpiece size deviates from the ideal value, the clamping/inner-supporting force decreases linearly.
If the workpiece size exceeds the clamping range or inner-supporting range, the clamping/inner-supporting force drops to 0.

Paremeter

Gripping range	6-20mm	Gripping force	0-1N	Theoretical gripping load**	0-78g	Ideal gripping workpiece size*	16mm
Internal gripping range	24-30mm	Internal gripping force	0-3.3N	Theoretical internal gripping load**	0-246g	Ideal internal gripping workpiece size*	24mm
Joint size	M5	Life time***	1.5 million times	Contact Temperature	<220°C	Safe pressure***	<90kPa

*: The width of the cuboid that generates the maximum gripping force (two-finger gripping), the outer diameter of the cylinder (multi-finger gripping), the width of the square hole (two-finger internal gripping), or the inner diameter of the circular hole (multi-finger internal gripping);
**: Only the theoretical load of the ideal workpiece under standard working conditions is marked for reference and comparison. The real load capacity is also affected by factors such as the surface structure and roughness of the workpiece. Please take the measured data as the standard;
***: The working air pressure and the surface roughness of the workpiece in the usage scenario may have different degrees of impact on the life-time. Please configure Rochu control Unit. Do not exceed the safe air pressure.

DAC Straight Fitting Installation

Scan to watch videos



DAL Side Fitting Installation



Scara Robotic Arm Installation

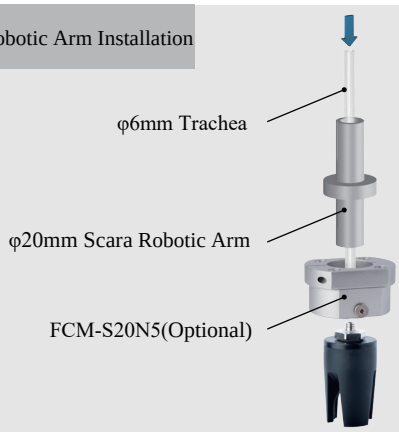

Robotic Arm Flange Side Fitting Installation

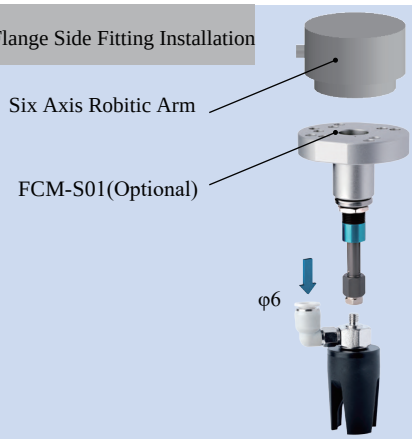

Rigid Connection Installation

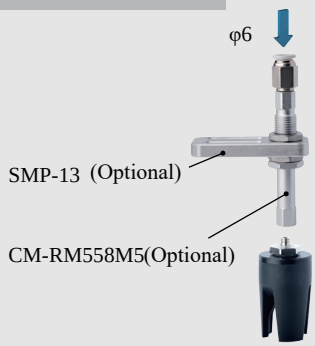

Buffer Installation



Matrix Installation

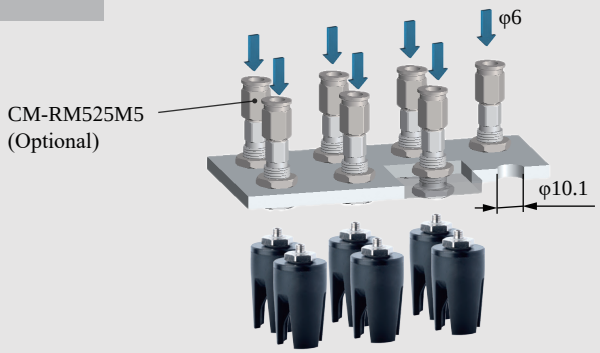

Precise Positioning Installation

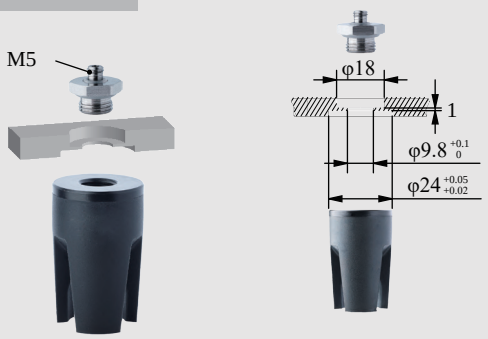

Installation of Optical Fiber Sensors





DAC-3C24[H]/S Direct-through H Type		DAL-3C24[H]/S Side-through H Type	
DAC-3C24[HAS]/S Direct-through Dust-free H Type		DAL-3C24[HAS]/S Side-through Dust-free H Type	
Weight	16.7g	**Weight**	29g



Product features

- Fingertip open under pressure and clamped in a vacuum. Inner fingertips distance D can be adjusted by working pressure.It is suggested to be used with Rochu control unit.
- Soft beak material is divided into Normal Material [H] and Dust-free Normal Material [HAS]. When the workpiece is light, or very soft, easy to adhere to adsorp on the soft beak, Dust-free Normal Material [HAS] is preferred.
- Food-grade material, direct food contact approved.

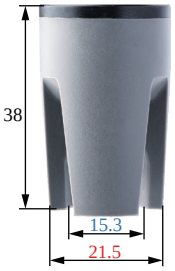



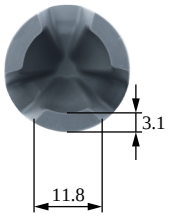

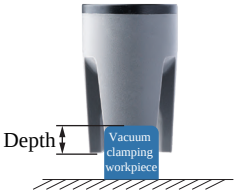









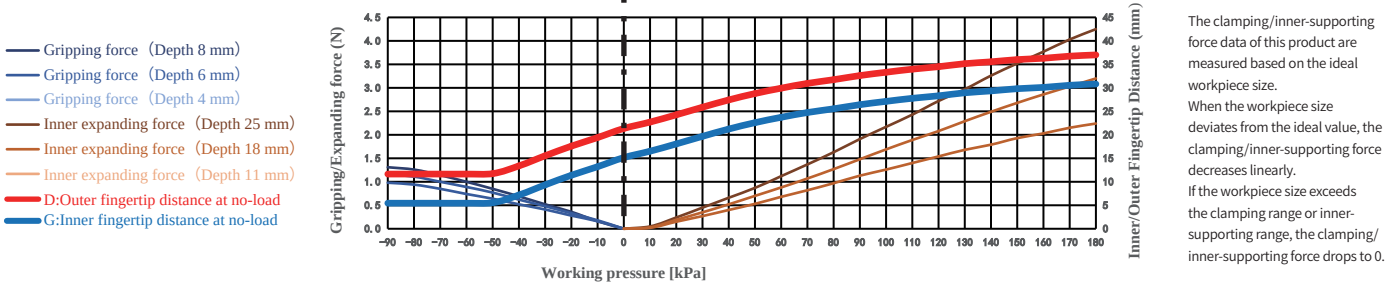

The clamping/inner-supporting force data of this product are measured based on the ideal workpiece size.
When the workpiece size deviates from the ideal value, the clamping/inner-supporting force decreases linearly.
If the workpiece size exceeds the clamping range or inner-supporting range, the clamping/inner-supporting force drops to 0.

Paremeter

Gripping range	6-20mm	Gripping force	0-1.3N	Theoretical gripping load**	0-98g	Ideal gripping workpiece size*	16mm
Internal gripping range	24-30mm	Internal gripping force	0-4.3N	Theoretical internal gripping load**	0-319g	Ideal internal gripping workpiece size*	24mm
Joint size	M5	Life time***	1.5 million times	Contact Temperature	<220℃	Safe pressure***	<180kPa

*: The width of the cuboid that generates the maximum gripping force (two-finger gripping), the outer diameter of the cylinder (multi-finger gripping), the width of the square hole (two-finger internal gripping), or the inner diameter of the circular hole (multi-finger internal gripping);
**: Only the theoretical load of the ideal workpiece under standard working conditions is marked for reference and comparison. The real load capacity is also affected by factors such as the surface structure and roughness of the workpiece. Please take the measured data as the standard;
***: The working air pressure and the surface roughness of the workpiece in the usage scenario may have different degrees of impact on the life-time. Please configure Rochu control Unit. Do not exceed the safe air pressure.

DAC Straight Fitting Installation

Scan to watch videos



DAL Side Fitting Installation

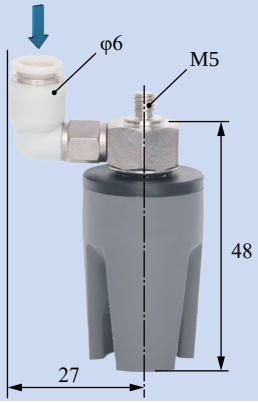

Scara Robotic Arm Installation

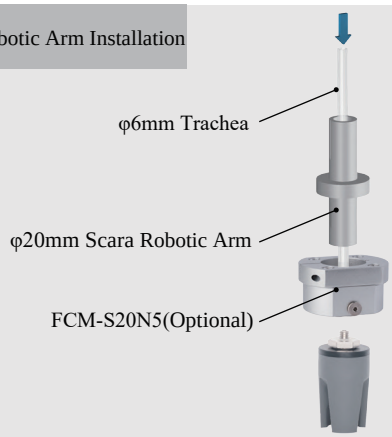

Robotic Arm Flange Side Fitting Installation

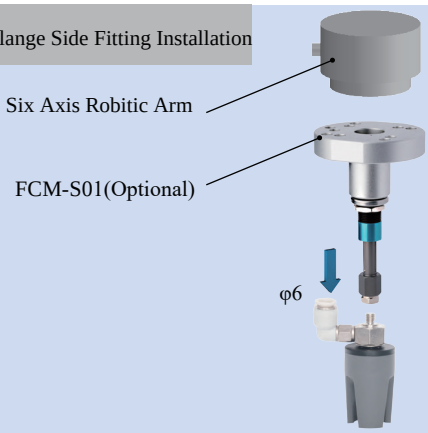

Rigid Connection Installation

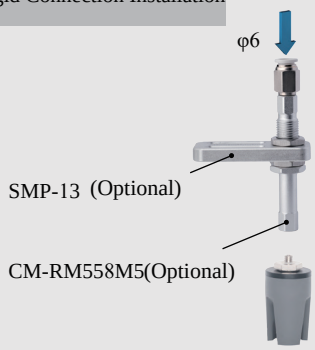

Buffer Installation

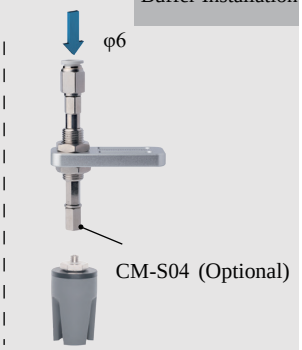

Matrix Installation

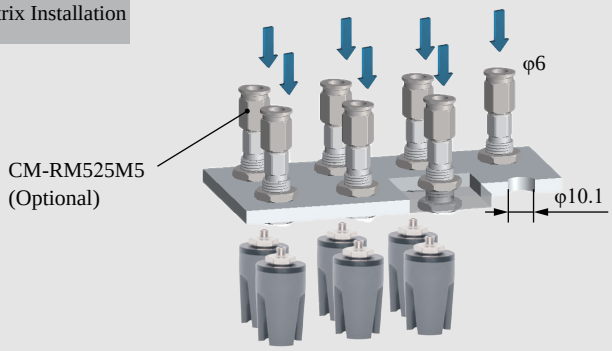

Precise Positioning Installation

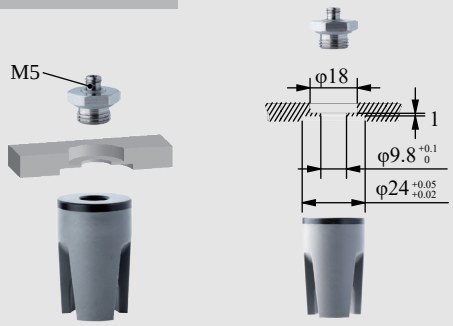

Installation of Optical Fiber Sensors



B-3C24[H]/S

DAC-3C24[MHB]/S Direct-through Acid&Alkali Resistant Type		DAL-3C24[MHB]/S Side-through Acid&Alkali Resistant Type	
			
Weight	16.7g	**Weight**	29g

Product features

- Fingertips open under pressure state and clamp in a vacuum. Inner fingertips distance G and outer fingertips distance D can be adjusted by working pressure.It is suggested to be used with Rochu control unit.
- The material of [MHB] has good acid and alkali resistance. It can come into contact with workpieces containing alkaline electrolyte and can be used in the lithium battery industry.

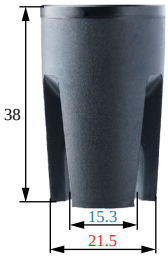



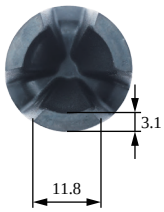

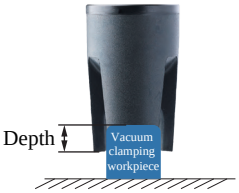









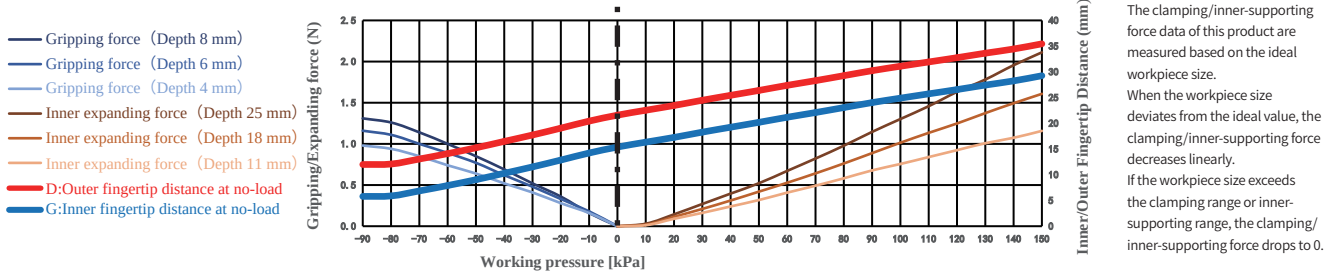

The clamping/inner-supporting force data of this product are measured based on the ideal workpiece size.
When the workpiece size deviates from the ideal value, the clamping/inner-supporting force decreases linearly.
If the workpiece size exceeds the clamping range or inner-supporting range, the clamping/inner-supporting force drops to 0.

Paremeter

Gripping range	6-20mm	Gripping force	0-1.31N	Theoretical gripping load**	0-98g	Ideal gripping workpiece size*	16mm
Internal gripping range	24-30mm	Internal gripping force	0-2.1N	Theoretical internal gripping load**	0-158g	Ideal internal gripping workpiece size*	24mm
Joint size	M5	Life time***	1.5 million times	Contact Temperature	<150℃	Safe pressure***	<150kPa

*: The width of the cuboid that generates the maximum gripping force (two-finger gripping), the outer diameter of the cylinder (multi-finger gripping), the width of the square hole (two-finger internal gripping), or the inner diameter of the circular hole (multi-finger internal gripping);
**: Only the theoretical load of the ideal workpiece under standard working conditions is marked for reference and comparison. The real load capacity is also affected by factors such as the surface structure and roughness of the workpiece. Please take the measured data as the standard;
***: The working air pressure and the surface roughness of the workpiece in the usage scenario may have different degrees of impact on the life-time. Please configure Rochu control Unit. Do not exceed the safe air pressure.

DAC Straight Fitting Installation

Scan to watch videos



DAL Side Fitting Installation



Scara Robotic Arm Installation



Robotic Arm Flange Side Fitting Installation

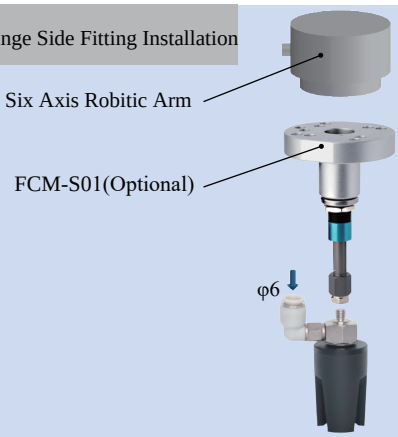

Rigid Connection Installation



Buffer Installation



Matrix Installation

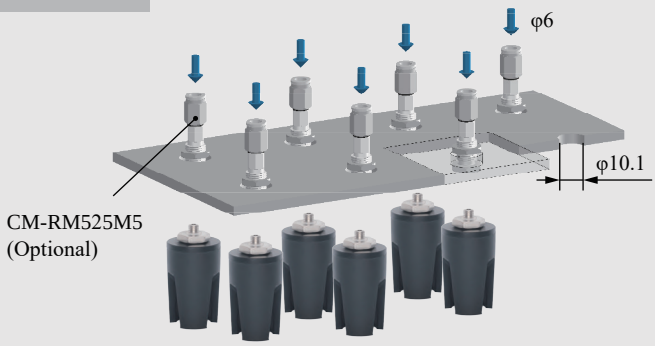

Precise Positioning Installation

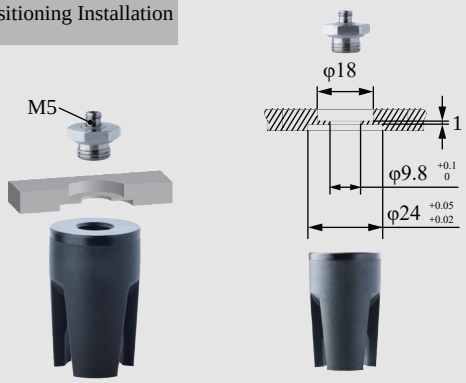

Installation of Optical Fiber Sensors



B-3C24[MHBJ/S



DAC-3KN22[H]/S Direct-through H Type		DAL-3KN22[H]/S Side-through H Type	
DAC-3KN22[HAS]/S Direct-through Dust-free H Type		DAL-3KN22[HAS]/S Side-through Dust-free H Type	
Weight	17g	Weight	28.1g



- Suitable for complex-shaped workpieces. Profiling nails, designed to fit the workpiece's shape, are installed via soft grippers' fingertip screw holes. They can be made of rigid materials like plastic or metal, depending on the workpiece.
- Fingertip open under pressure and clamped in a vacuum. Fingertip distance G can be adjusted by working pressure.It is suggested to be used with Rochu control unit.
- When soft grippers contact workpieces,especially those with dust-prevention needs,or miniature,lightweight and easily-adsorbable ones,choose dust-free material [HAS] preferentially.
- Food-grade material, safe for direct contact with food

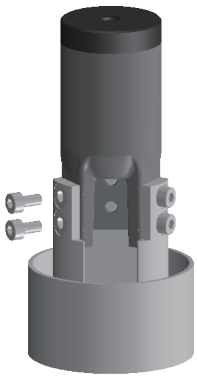

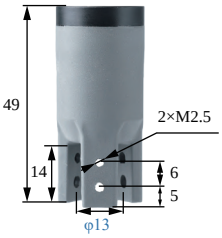

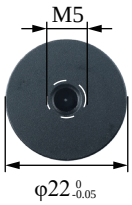

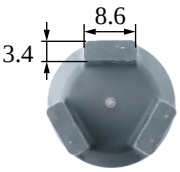

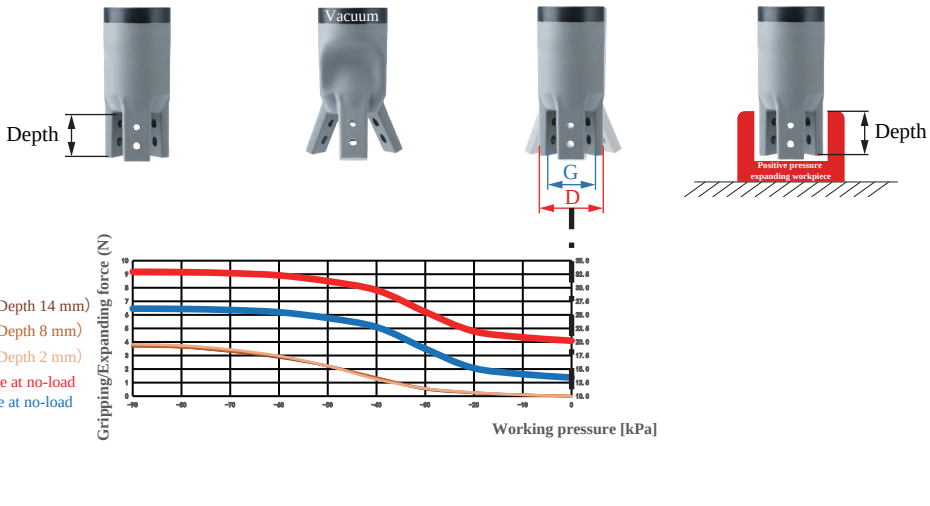

Gripping range	—	Gripping force	—	Theoretical gripping load**	—	Ideal gripping workpiece size*	—
Internal gripping range	22-32mm	Internal gripping force	0-3.8N	Theoretical internal gripping load**	0-287g	Ideal internal gripping workpiece size*	25mm
Joint size	M5	Life time***	1.5 million times	Contact Temperature	<220°C	Safe pressure***	Use under single negative pressure

DAC Straight Fitting Installation

Scan to watch videos



DAL Side Fitting Installation

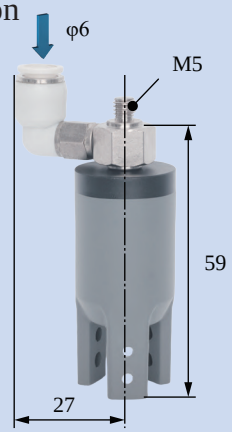

Installation of Optical Fiber Sensors

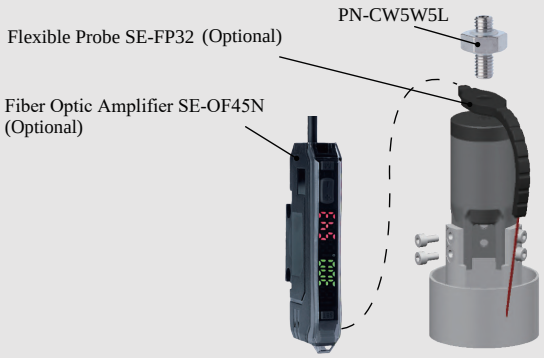

Robotic Arm Flange Side Fitting Installation

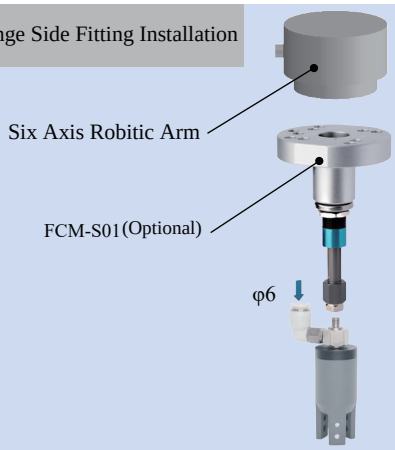

Precise Positioning Installation

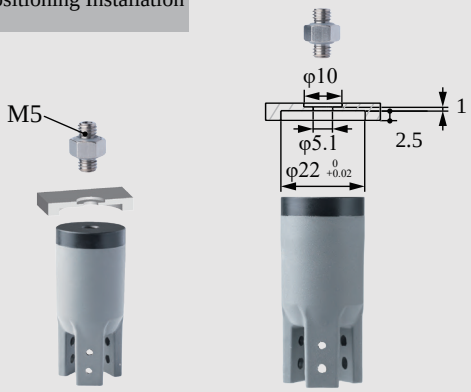

Scara Robotic Arm Installation

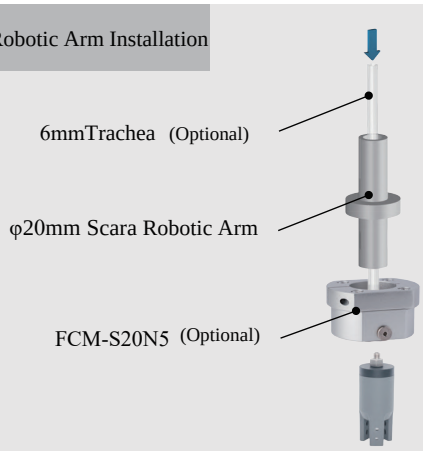

Matrix Installation

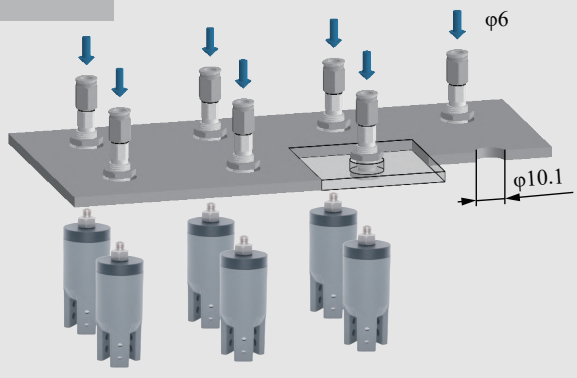

Rigid Connection Installation

Buffer Installation

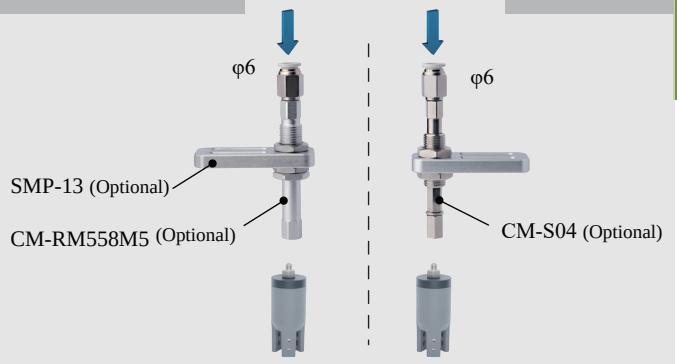

B-3KN22[H]/S



DAC-3KN30[H]/S Direct-through H Type		DAL-3KN30[H]/S Side-through H Type	
DAC-3KN30[HAS]/S Direct-through Dust-free H Type		DAL-3KN30[HAS]/S Side-through Dust-free H Type	
Weight	45g	**Weight**	59.1g



Product features

- Suitable for complex-shaped workpieces. Profiling nails, designed to fit the workpiece's shape, are installed via soft grippers' fingertip screw holes. They can be made of rigid materials like plastic or metal, depending on the workpiece.
- Fingertip open under pressure and clamped in a vacuum. Fingertip distance G can be adjusted by working pressure.It is suggested to be used with Rochu control unit.
- When soft grippers contact workpieces,especially those with dust-prevention needs,or miniature,lightweight and easily-adsorbable ones,choose dust-free material [HAS] preferentially.
- Food-grade material, safe for direct contact with food

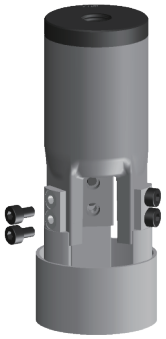

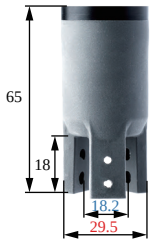

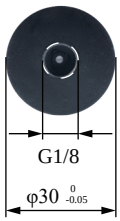

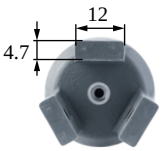

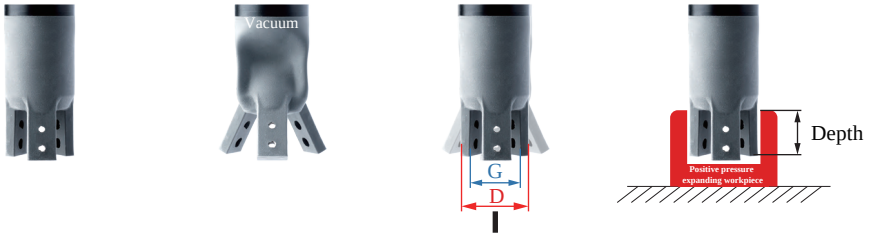

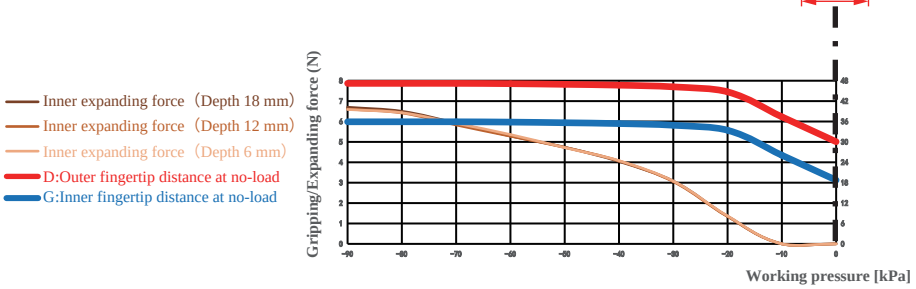

The clamping/inner-supporting force data of this product are measured based on the ideal workpiece size.
When the workpiece size deviates from the ideal value, the clamping/inner-supporting force decreases linearly.
If the workpiece size exceeds the clamping range or inner-supporting range, the clamping/inner-supporting force drops to 0.

Paremeter

Gripping range	—	Gripping force	—	Theoretical gripping load**	—	Ideal gripping workpiece size*	—
Internal gripping range	32-40mm	Internal gripping force	0-6.7N	Theoretical internal gripping load**	0-503g	Ideal internal gripping workpiece size*	36mm
Joint size	G1/8	Life time***	1.5 million times	Contact Temperature	<220℃	Safe pressure***	Use under single negative pressure

*: The width of the cuboid that generates the maximum gripping force (two-finger gripping), the outer diameter of the cylinder (multi-finger gripping), the width of the square hole (two-finger internal gripping), or the inner diameter of the circular hole (multi-finger internal gripping);
**: Only the theoretical load of the ideal workpiece under standard working conditions is marked for reference and comparison. The real load capacity is also affected by factors such as the surface structure and roughness of the workpiece. Please take the measured data as the standard;
***: The working air pressure and the surface roughness of the workpiece in the usage scenario may have different degrees of impact on the life-time. Please configure Rochu control Unit. Do not exceed the safe air pressure.

DAC Straight Fitting Installation



DAL Side Fitting Installation

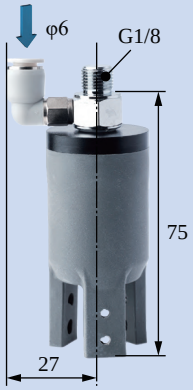

Scara Robotic Arm Installation



Robotic Arm Flange Side Fitting Installation

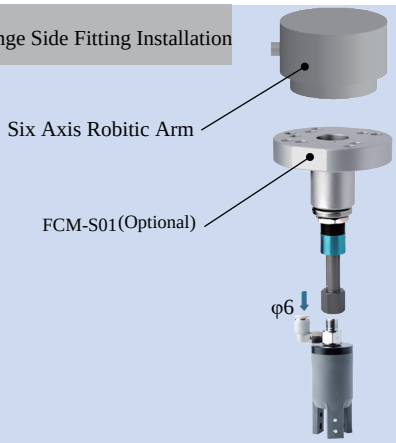

Rigid Connection Installation



Buffer Installation



Matrix Installation

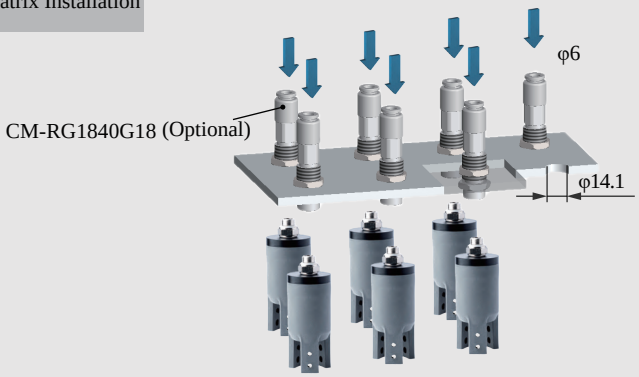

Precise Positioning Installation

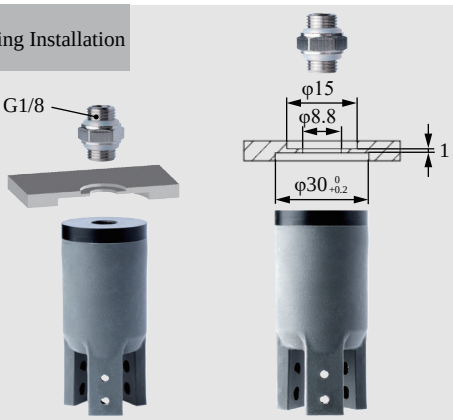

Installation of Optical Fiber Sensors



DAC-3GN51[H]/SN Direct-through H Type	DAS-3GN51[H]/SN Direct-through Precision Positioning H Type	DAL-3GN51[H]/SN Side-through H Type	DAM-3GN51[H]/SN Multi-way Precision Positioning H Type
DAC-3GN51[HAS]/SN Direct-through Dust-free H Type	DAS-3GN51[HAS]/SN Direct-through Precision Positioning H Type	DAL-3GN51[HAS]/SN Side-through Dust-free H Type	DAM-3GN51[HAS]/SN Multi-way Precision Positioning Dust-free H Type
			
Weight 43.5g	**Weight** 50.7g	**Weight** 56.9g	**Weight** 54.9g

Product features

- Suitable for complex-shaped workpieces. Profiling nails, designed to fit the workpiece's shape, are installed via soft grippers' fingertip screw holes. They can be made of rigid materials like plastic or metal, depending on the workpiece.
- Fingertips open under pressure state and clamp in a vacuum. Inner fingertips distance G can be adjusted by working pressure.It is suggested to be used with Rochu control unit.
- When soft grippers contact workpieces,especially those with dust-prevention needs,or miniature,lightweight and easily-adsorbable ones,choose dust-free material [HAS] preferentially.

Scan to watch videos

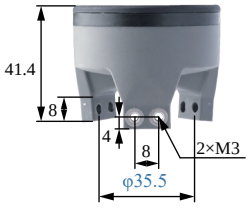



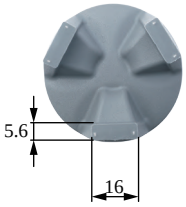

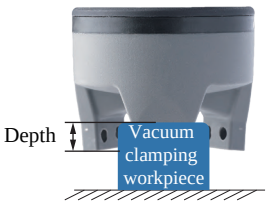









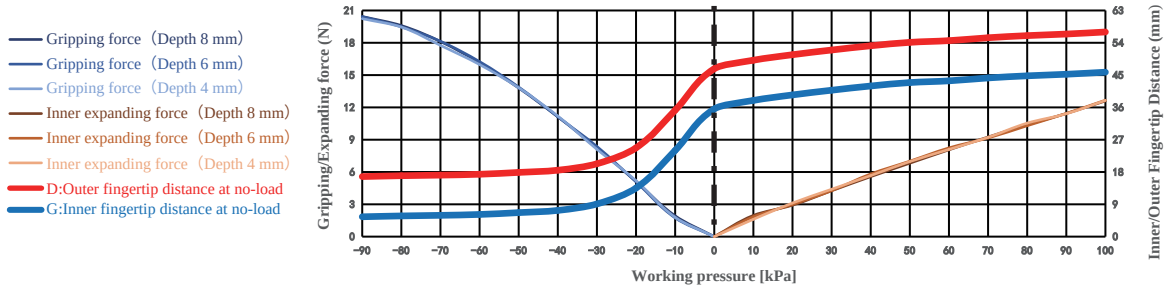

The clamping/inner-supporting force data of this product are measured based on the ideal workpiece size.
When the workpiece size deviates from the ideal value, the clamping/inner-supporting force decreases linearly.
If the workpiece size exceeds the clamping range or inner-supporting range, the clamping/inner-supporting force drops to 0.

Paremeter

Gripping range	10-35mm	Gripping force	0-20.4N	Theoretical gripping load**	0-1533g	Ideal gripping workpiece size*	35mm
Internal gripping range	50-54mm	Internal gripping force	0-12.7N	Theoretical internal gripping load**	0-950g	Ideal internal gripping workpiece size*	51mm
Joint size	G1/8	Life time***	1.5 million times	Contact Temperature	<220°C	Safe pressure***	<100kPa

*: The width of the cuboid that generates the maximum gripping force (two-finger gripping), the outer diameter of the cylinder (multi-finger gripping), the width of the square hole (two-finger internal gripping), or the inner diameter of the circular hole (multi-finger internal gripping);
**: Only the theoretical load of the ideal workpiece under standard working conditions is marked for reference and comparison. The real load capacity is also affected by factors such as the surface structure and roughness of the workpiece. Please take the measured data as the standard;
***: The working air pressure and the surface roughness of the workpiece in the usage scenario may have different degrees of impact on the life-time. Please configure Rochu control Unit. Do not exceed the safe air pressure.

DACModule
(Direct-through)

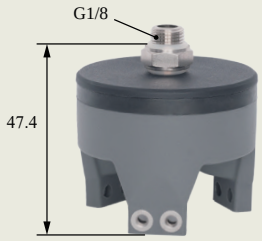

DASModule
(Precise Positioning Direct-through)

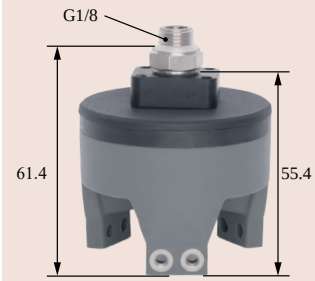

DALModule
(Side-through)

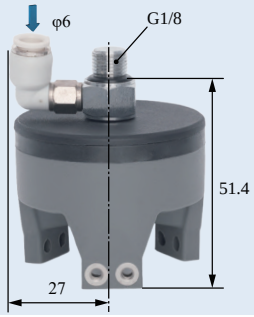

DAMModule
(Precise Positioning Multiple-through)

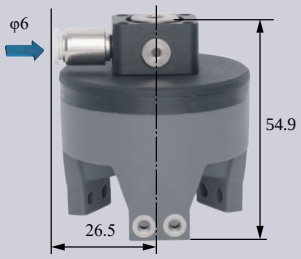

DAS Detection + Profile Block Installation

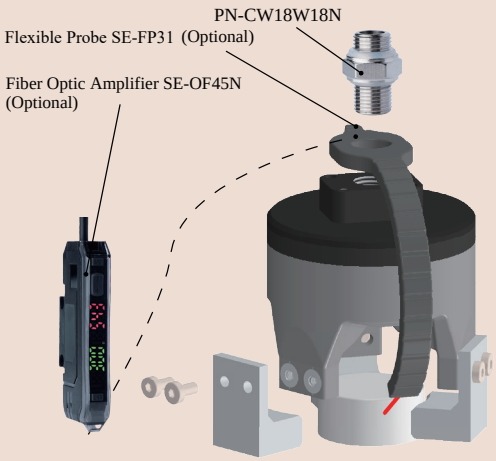

DAM Precise Positioning + Detection + Profile Block Installation

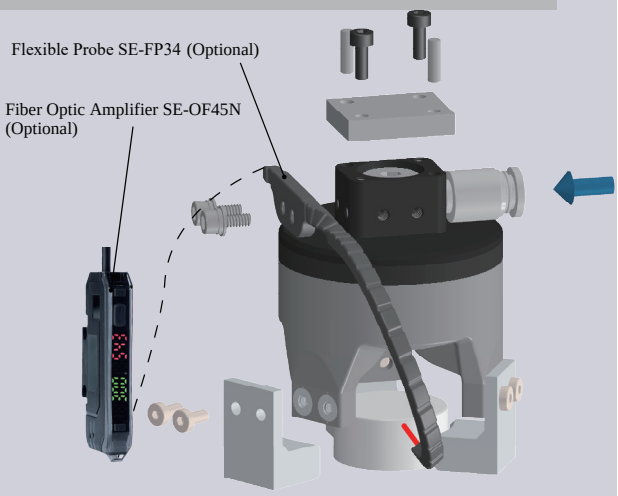

DAS Precise Positioning and Direct-through Installation

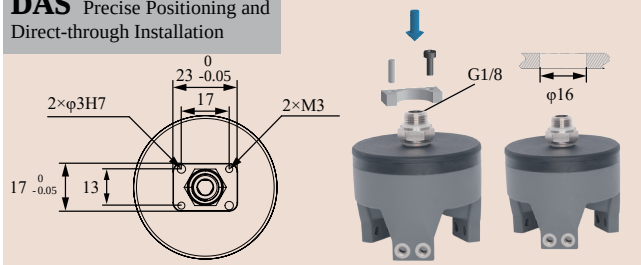

DAM Precise Positioning and Multiple-through Installation

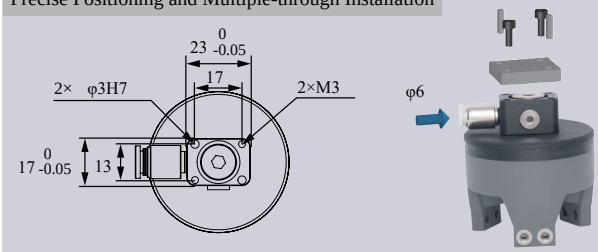

DAS Matrix Installation

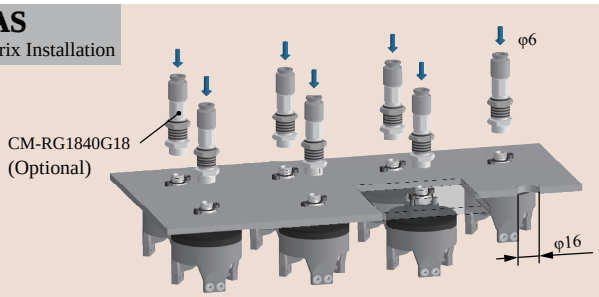

DAL Robot Arm Flange Side-through Installation

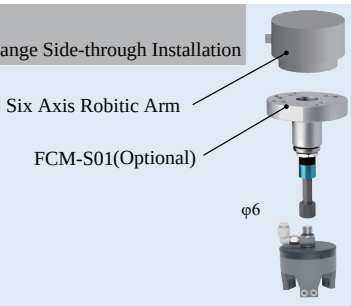

DAC Scara Scara Robot Arm Installation

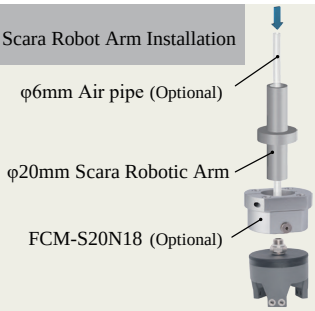

DAC Rigid Connection Installation

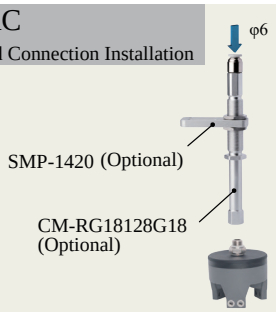

DAC Buffer Installation

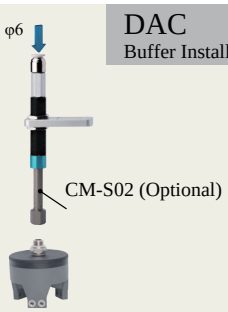



DAC-4A18[H]/S Direct-through H Type		DAL-4A18[H]/S Side-through H Type	
DAC-4A18[HAS]/S Direct-through Dust-free H Type		DAL-4A18[HAS]/S Side-through Dust-free H Type	
Weight	7.9g	Weight	18.7g



- Fingertip open under pressure and clamped in a vacuum. Fingertip distance G can be adjusted by working pressure.It is suggested to be used with Rochu control unit.
- Soft beak material is divided into Normal Material [H] and Dust-free Normal Material [HAS]. When the workpiece is light, or very soft, easy to adhere to adsorp on the soft beak, Dust-free Normal Material [HAS] is preferred.
- Food-grade material, direct food contact approved.

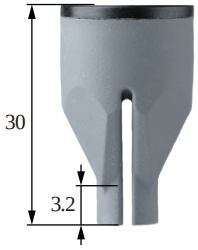

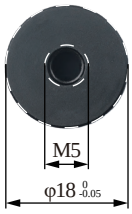

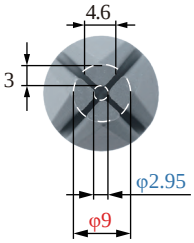

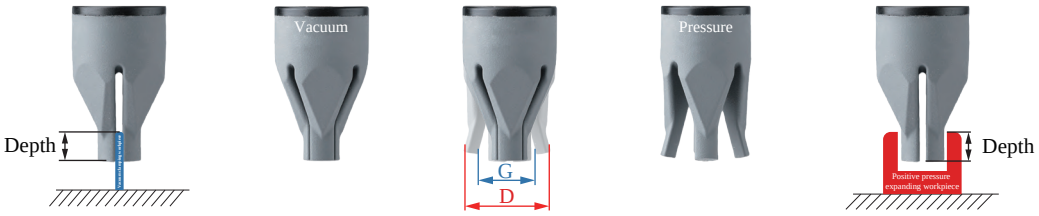

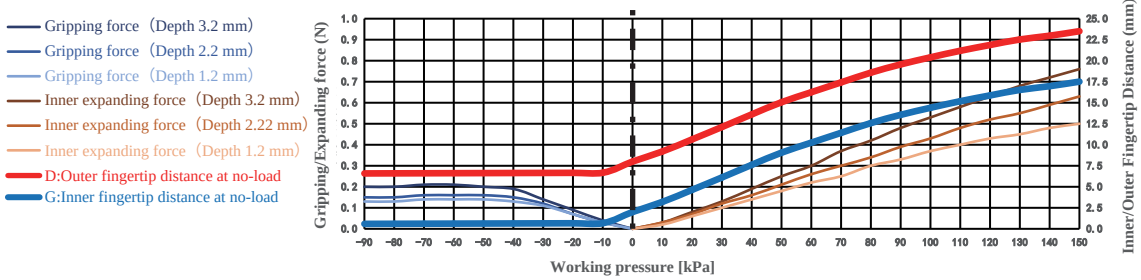

Gripping range	1-5mm	Gripping force	0-0.2N	Theoretical gripping load**	0-12g	Ideal gripping workpiece size*	2mm
Internal gripping range	7-23mm	Internal gripping force	0-0.8N	Theoretical internal gripping load**	0-46g	Ideal internal gripping workpiece size*	10mm
Joint size	M5	Life time***	1.5 million times	Contact Temperature	<220°C	Safe pressure***	<150kPa

DAC Straight Fitting Installation

Scan to watch videos



DAL Side Fitting Installation

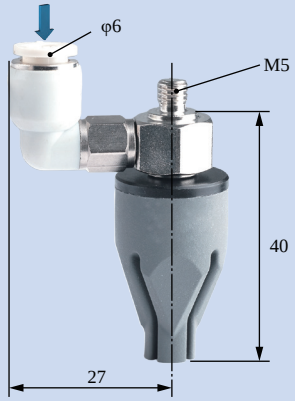

Scara Robotic Arm Installation

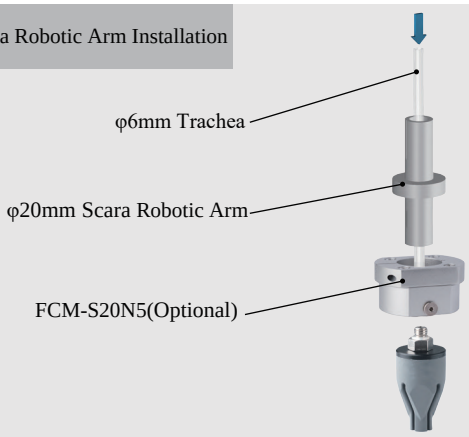

Robotic Arm Flange Side Fitting Installation

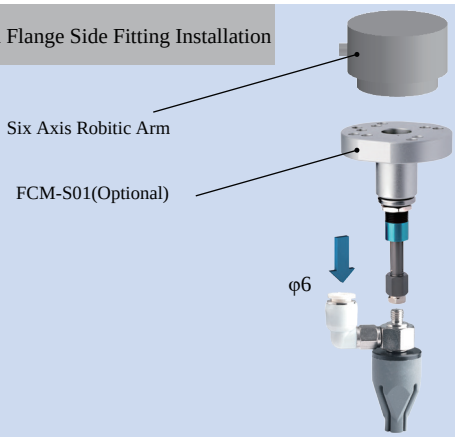

Rigid Connection Installation

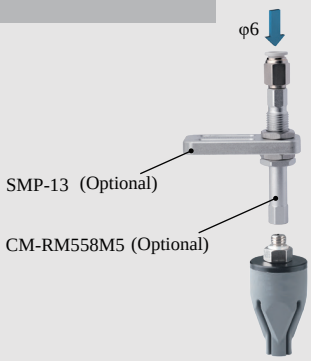

Buffer Installation

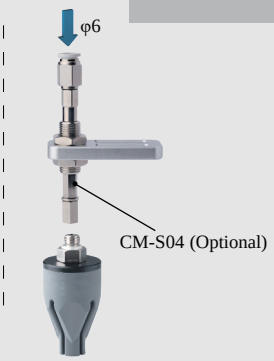

Matrix Installation

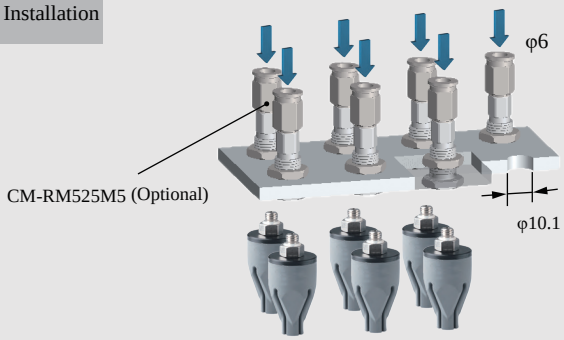

Precise Positioning Installation

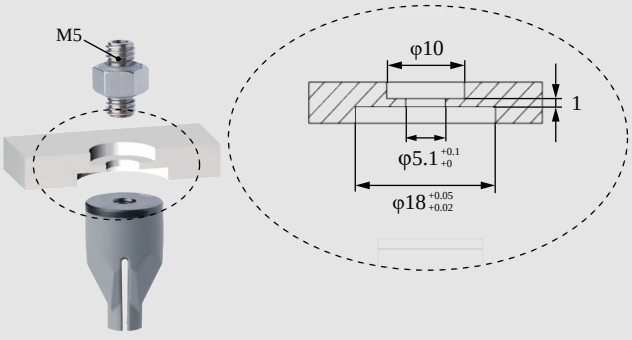

Installation of Optical Fiber Sensors



	DAC-4B18[P] Direct-through P Type		DAL-4B18[P] Direct-through P Type	
	DAC-4B18[PAS] Direct-through Dust-free P Type		DAL-4B18[PAS] Side-through Dust-free P Type	
	Weight	13.8g	Weight	22.2g

- Fingertip open under pressure and clamped in a vacuum. Fingertip distance G can be adjusted by working pressure.It is suggested to be used with Rochu control unit.
- Soft beak material is divided into Normal Material [P] and Dust-free Normal Material [PAS]. When the workpiece is light, or very soft, easy to adhere to adsorp on the soft beak, Dust-free Normal Material [PAS] is preferred.
- Food-grade material, direct food contact approved.

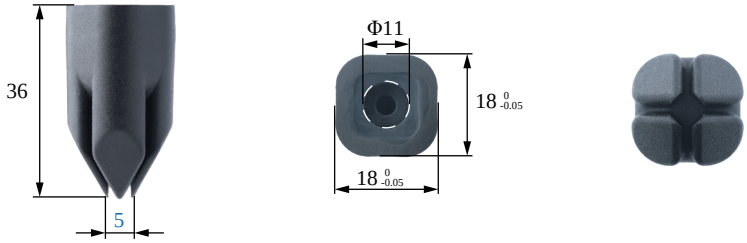

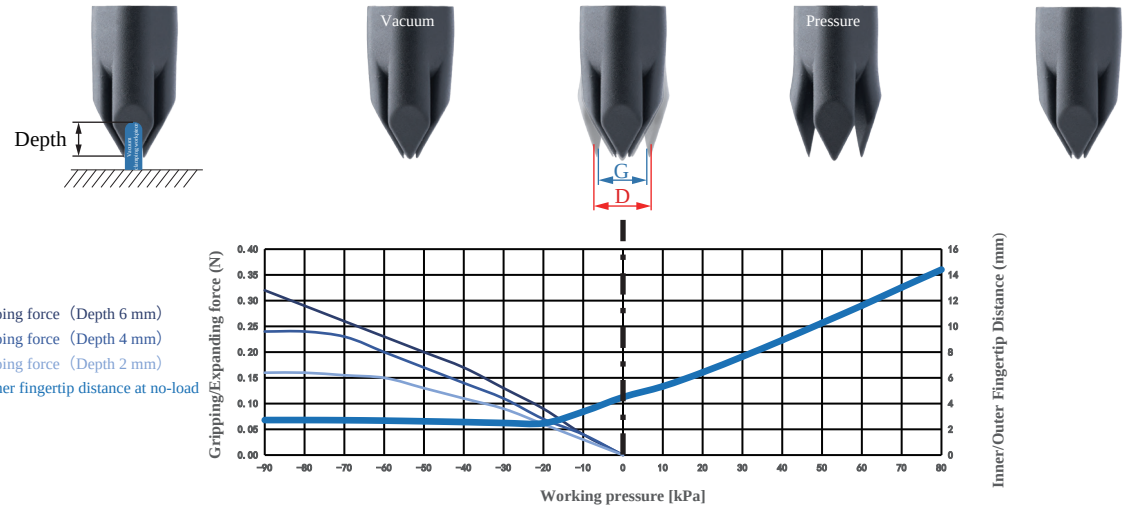

Gripping range	3-8mm	Gripping force	0-0.3N	Theoretical gripping load**	0-19g	Ideal gripping workpiece size*	6mm
Internal gripping range	—	Internal gripping force	—	Theoretical internal gripping load**	—	Ideal internal gripping workpiece size*	—
Joint size	M5	Life time***	1.5 million times	Contact Temperature	<220°C	Safe pressure***	<80kPa

DAC Straight Fitting Installation

Scan to watch videos



DAL Side Fitting Installation

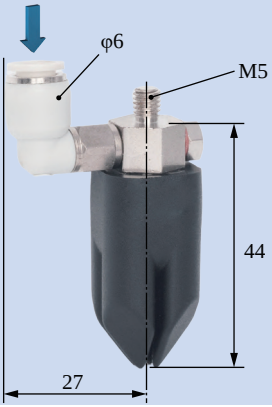

Scara Robotic Arm Installation

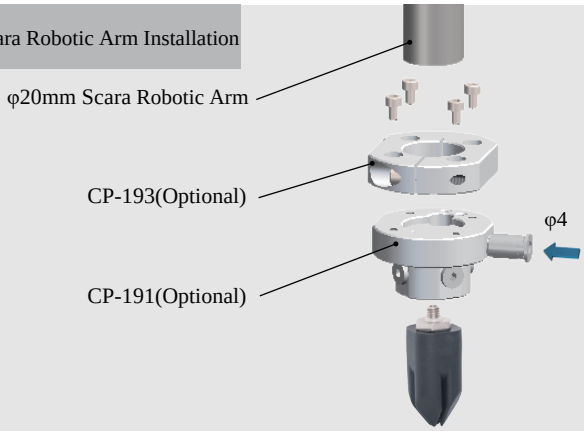

Robotic Arm Flange Side Fitting Installation

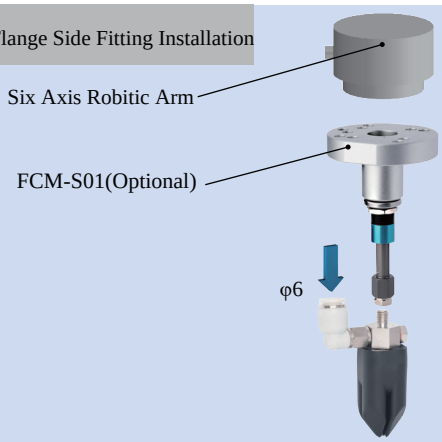

Rigid Connection Installation



Buffer Installation



Matrix Installation

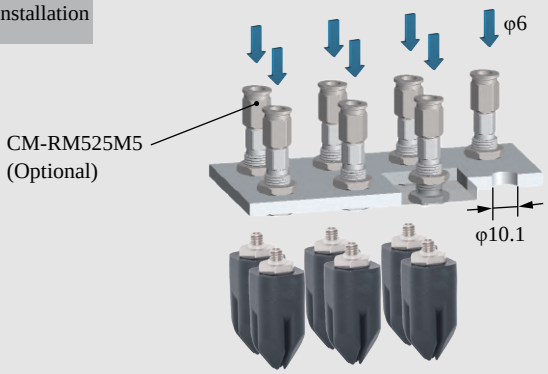

Installation of Optical Fiber Sensors

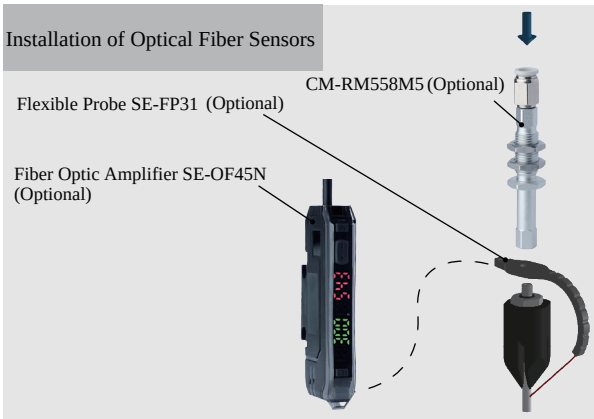



DAC-4B18[P]/S Direct-through P Type		DAL-4B18[P]/S Direct-through P Type	
DAC-4B18[PAS]/S Direct-through Dust-free P Type		DAL-4B18[PAS]/S Side-through Dust-free P Type	
Weight	10g	Weight	21.5g



- Fingertip open under pressure and clamped in a vacuum. Fingertip distance G can be adjusted by working pressure.It is suggested to be used with Rochu control unit.
- Soft beak material is divided into Normal Material [P] and Dust-free Normal Material [PAS]. When the workpiece is light, or very soft, easy to adhere to adsorp on the soft beak, Dust-free Normal Material [PAS] is preferred.
- Food-grade material, direct food contact approved.

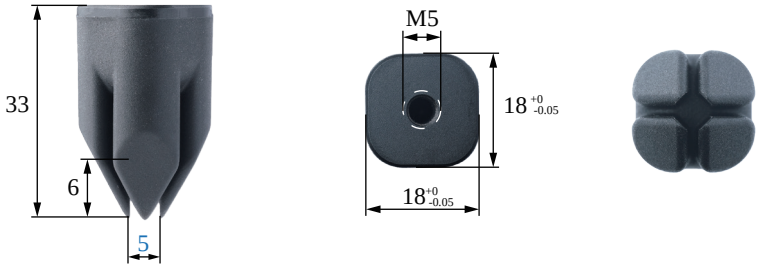

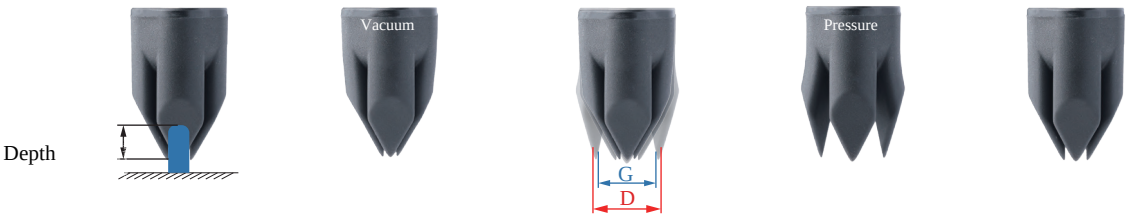

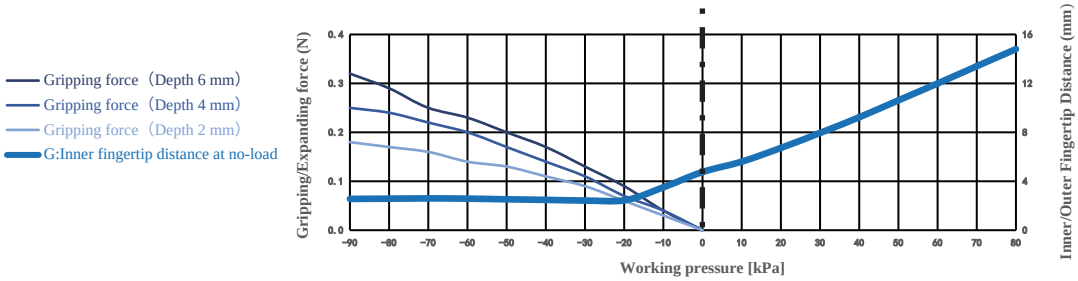

Gripping range	3-8mm	Gripping force	0-0.3N	Theoretical gripping load**	0-19g	Ideal gripping workpiece size*	6mm
Internal gripping range	—	Internal gripping force	—	Theoretical internal gripping load**	—	Ideal internal gripping workpiece size*	—
Joint size	M5	Life time***	1.5 million times	Contact Temperature	<220°C	Safe pressure***	<80kPa

DAC Straight Fitting Installation

Scan to watch videos



DAL Side Fitting Installation

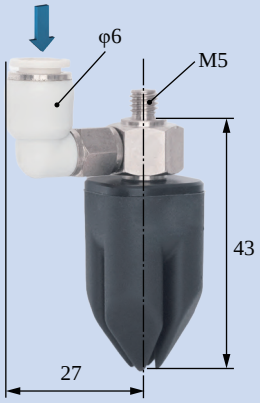

Scara Robotic Arm Installation

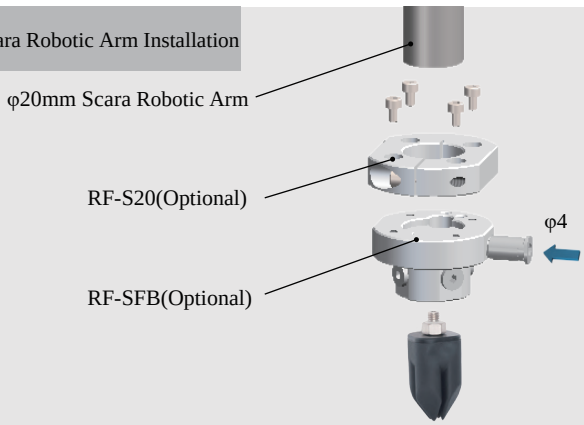

Robotic Arm Flange Side Fitting Installation

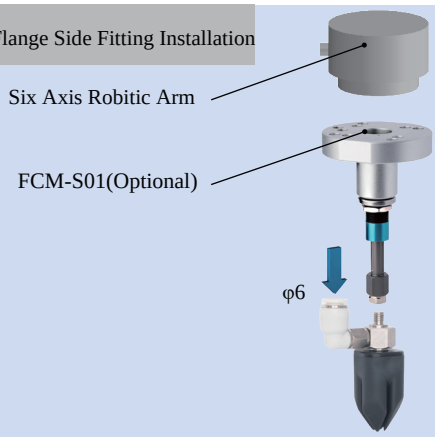

Rigid Connection Installation

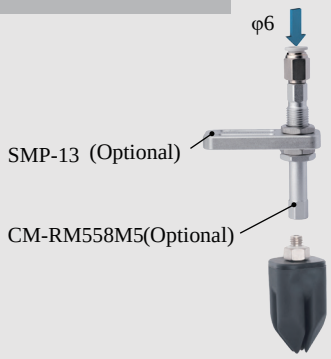

Buffer Installation

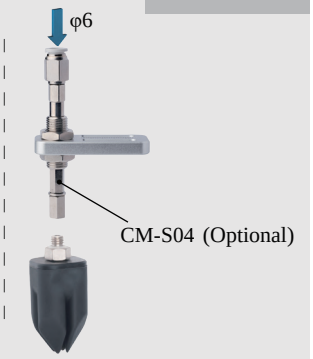

Matrix Installation

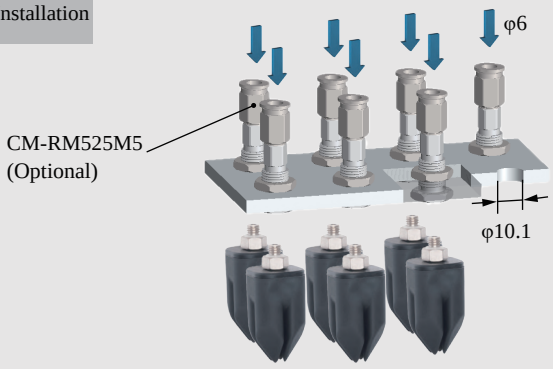

Precise Positioning Installation

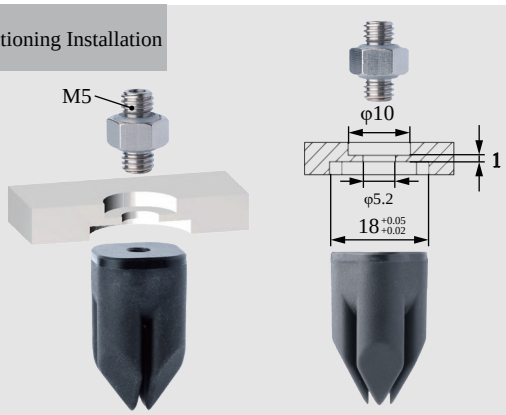

Installation of Optical Fiber Sensors

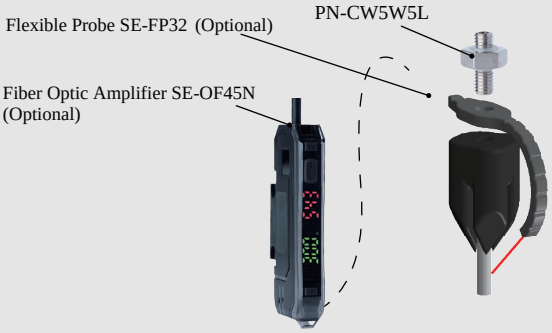



DAC-4H18[H]/S Direct-through H Type		DAL-4H18[H]/S Side-through H Type	
DAC-4H18[HAS]/S Direct-through Dust-free H Type		DAL-4H18[HAS]/S Side-through Dust-free H Type	
Weight	12.2g	Weight	23.7g



- Fingertip open under pressure and clamped in a vacuum. Inner fingertips distance D can be adjusted by working pressure.It is suggested to be used with Rochu control unit.
- Soft beak material is divided into Normal Material [H] and Dust-free Normal Material [HAS]. When the workpiece is light, or very soft, easy to adhere to adsorp on the soft beak, Dust-free Normal Material [HAS] is preferred.
- Food-grade material, direct food contact approved.

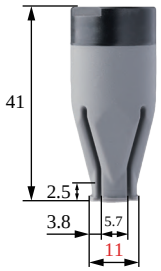

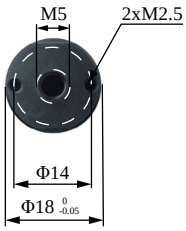













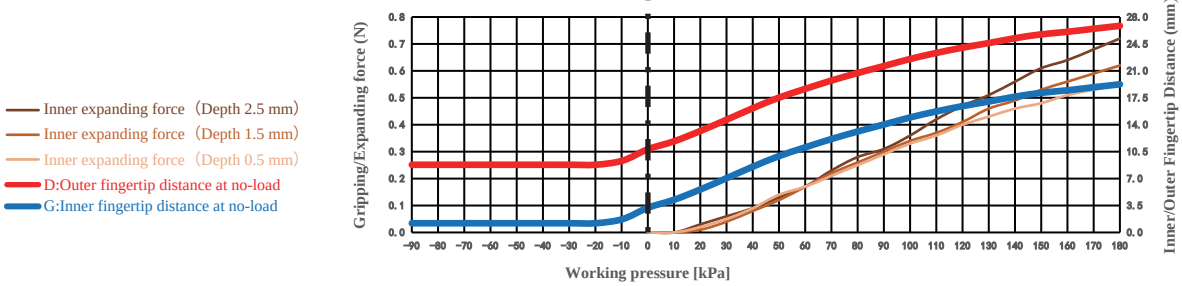

Gripping range	—	Gripping force	—	Theoretical gripping load**	—	Ideal gripping workpiece size*	—
Internal gripping range	12-22mm	Internal gripping force	0-0.7N	Theoretical internal gripping load**	0-43g	Ideal internal gripping workpiece size*	14mm
Joint size	M5	Life time***	1.5 million times	Contact Temperature	<220℃	Safe pressure***	<180kPa

DAC Straight Fitting Installation

Scan to watch videos



DAL Side Fitting Installation

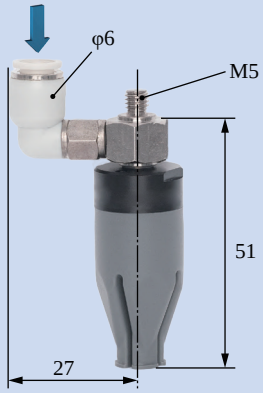

Scara Robotic Arm Installation

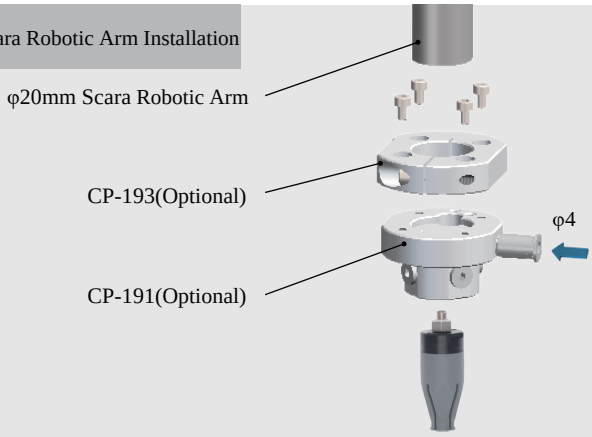

Robotic Arm Flange Side Fitting Installation

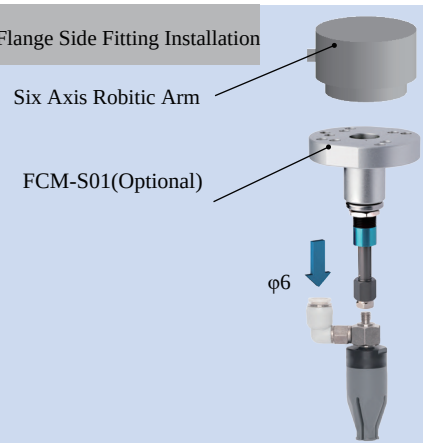

Rigid Connection Installation

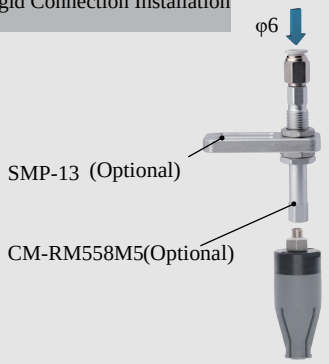

Buffer Installation

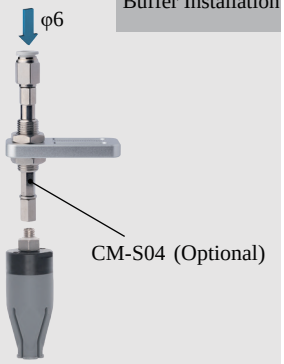

Matrix Installation

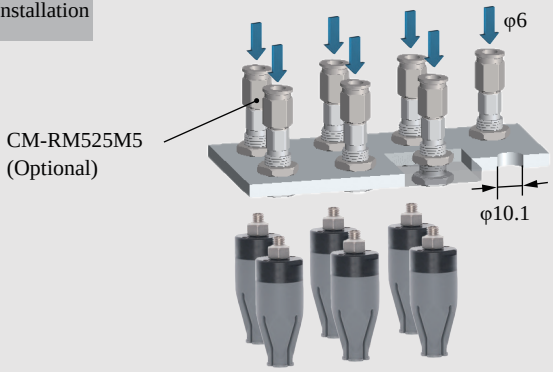

Precise Positioning Installation

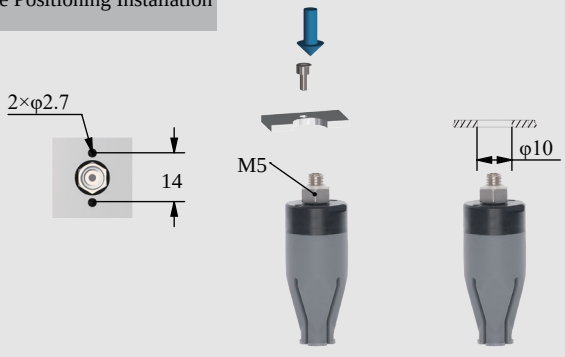

Installation of Optical Fiber Sensors

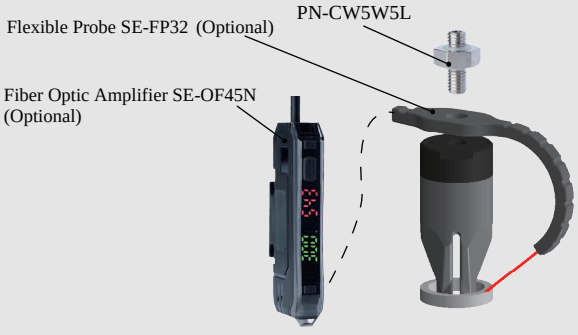

DAC-4G22[H]/SN Direct-through H Type	DAS-4G22[H]/SN Direct-through Precision Positioning H Type	DAL-4G22[H]/SN Side-through H Type	DAM-4G22[H]/SN Multi-way Precision Positioning H Type
DAC-4G22[HAS]/SN Direct-through Dust-free H Type	DAS-4G22[HAS]/SN Direct-through Precision Positioning H Type	DAL-4G22[HAS]/SN Side-through Dust-free H Type	DAM- 4G22 [HAS]/SN Multi-way Precision Positioning Dust-free H Type
			
Weight 14.1g	Weight 21.3g	Weight 28.6g	Weight 25.5g

- Fingertip open under pressure and clamped in a vacuum. Fingertip distance G can be adjusted by working pressure.It is suggested to be used with Rochu control unit.
- Soft beak material is divided into Normal Material [H] and Dust-free Normal Material [HAS]. When the workpiece is light, or very soft, easy to adhere to adsorp on the soft beak, Dust-free Normal Material [HAS] is preferred.
- Food-grade material, direct food contact approved.

Scan to watch videos





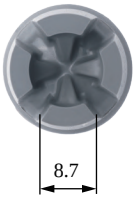

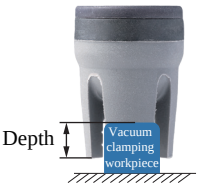









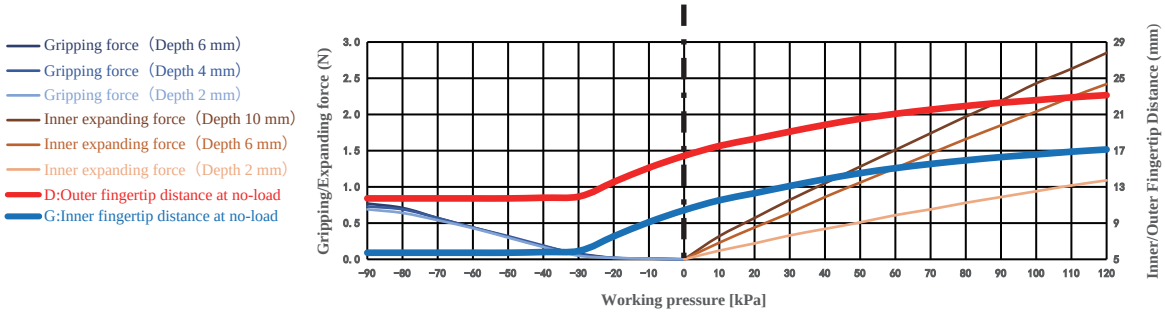

Gripping range	5.5-12mm	Gripping force	0-0.8N	Theoretical gripping load**	0-46g	Ideal gripping workpiece size*	8mm
Internal gripping range	17-20mm	Internal gripping force	0-2.9N	Theoretical internal gripping load**	0-172g	Ideal internal gripping workpiece size*	18mm
Joint size	G1/8	Life time***	1.5 million times	Contact Temperature	<220℃	Safe pressure***	<120kPa

DACModule
(Direct-through)



DASModule
(Precise Positioning Direct-through)

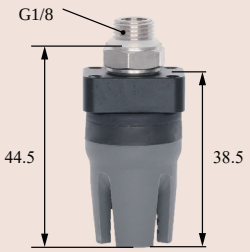

DALModule
(Side-through)

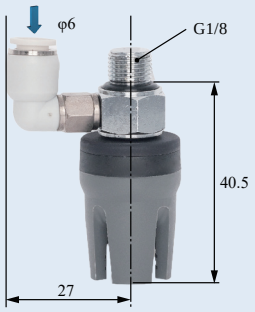

DAMModule
(Precise Positioning Multiple-through)

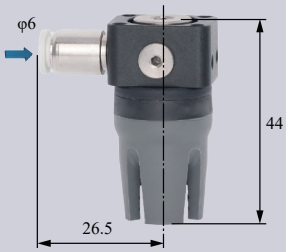

DAS Detection

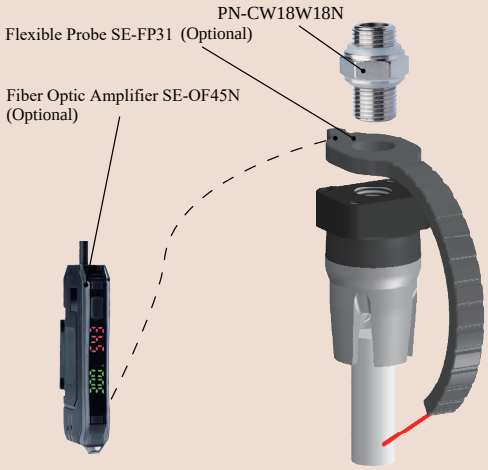

DAM Precise Positioning + Detection

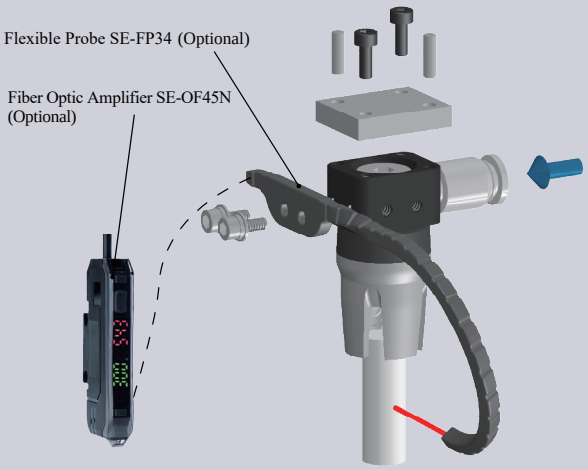

DAS Precise Positioning and Direct-through Installation

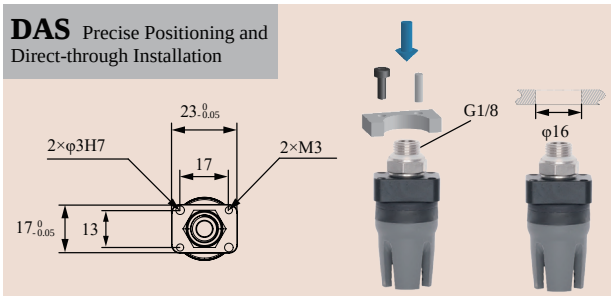

DAM
Precise Positioning and Multiple-through Installation

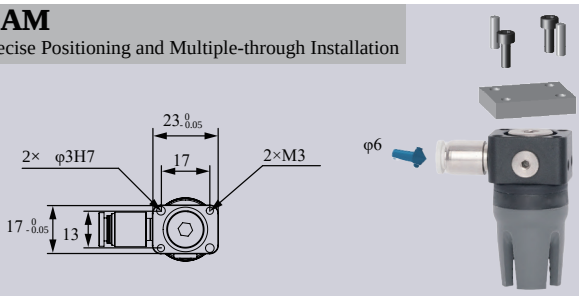

DAS
Matrix Installation

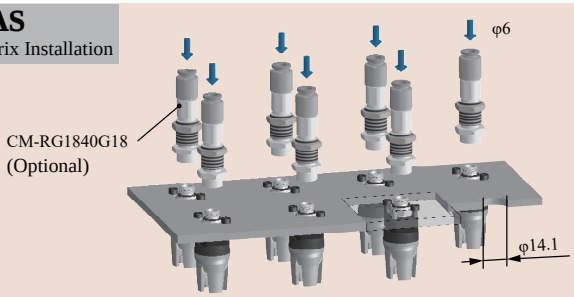

DAL
Robot Arm Flange Side-through Installation

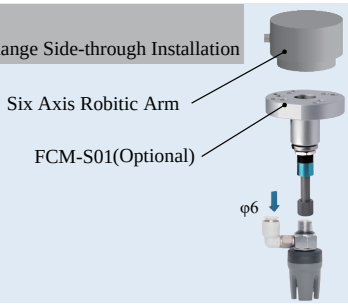

DAC Scara Scara Robot Arm Installation

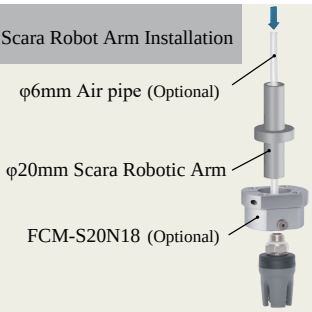

DAC
Rigid Connection Installation

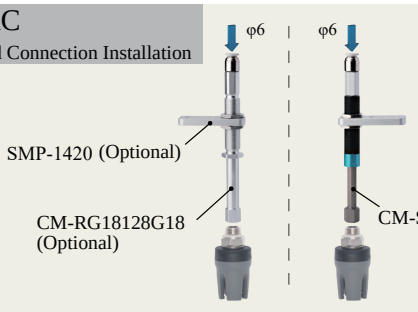

DAC
Buffer Installation

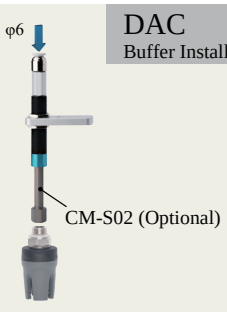



DAC-4A24[H]/S Direct-through H Type		DAL-4A24[H]/S Side-through H Type	
DAC-4A24[HAS]/S Direct-through Dust-free H Type		DAL-4A24[HAS]/S Side-through Dust-free H Type	
Weight	19g	Weight	33g



- Fingertips open under pressure state and clamp in a vacuum. Inner fingertips distance G and outer fingertips distance D can be adjusted by working pressure.It is suggested to be used with Rochu control unit.
- Soft beak material is divided into Normal Material [H] and Dust-free Normal Material [HAS]. When the workpiece is light, or very soft, easy to adhere to adsorp on the soft beak, Dust-free Normal Material [HAS] is preferred.
- Food-grade material, direct food contact approved.

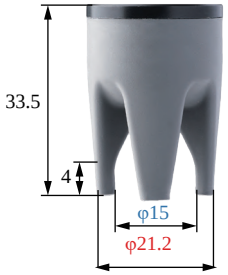



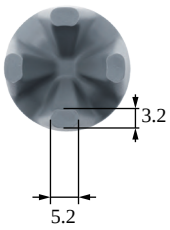

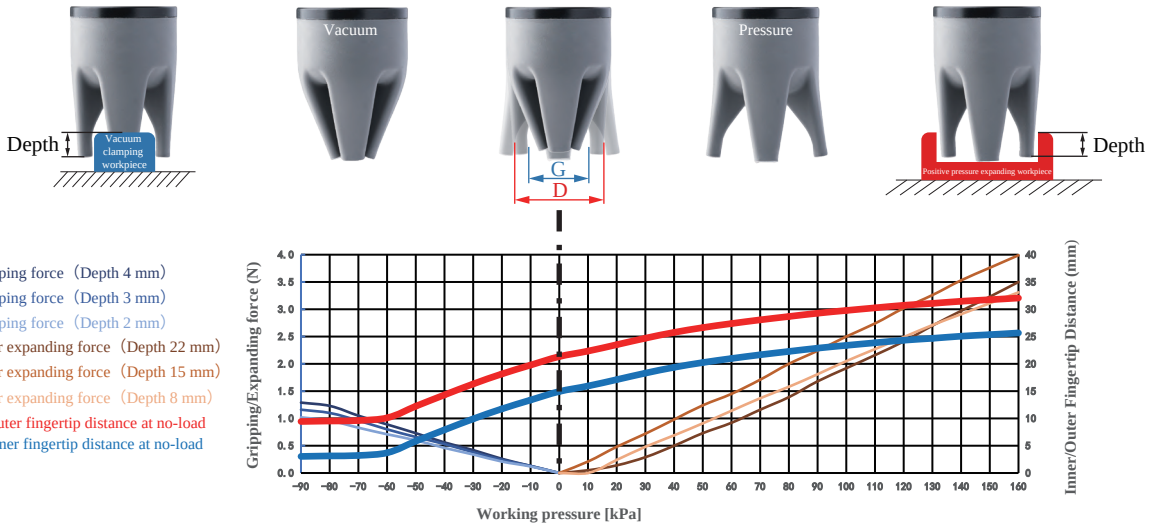

Gripping range	5.5-16mm	Gripping force	0-1.3N	Theoretical gripping load**	0-77g	Ideal gripping workpiece size*	15.5mm
Internal gripping range	24-30mm	Internal gripping force	0-4N	Theoretical internal gripping load**	0-239g	Ideal internal gripping workpiece size*	24mm
Joint size	M5	Life time***	1.5 million times	Contact Temperature	<220°C	Safe pressure***	<160kPa

DAC Straight Fitting Installation

Scan to watch videos



DAL Side Fitting Installation

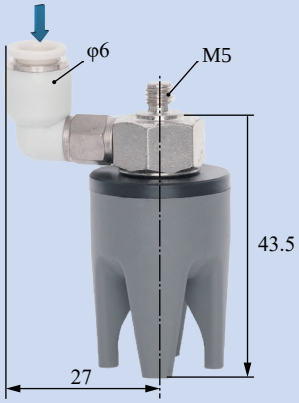

Scara Robotic Arm Installation

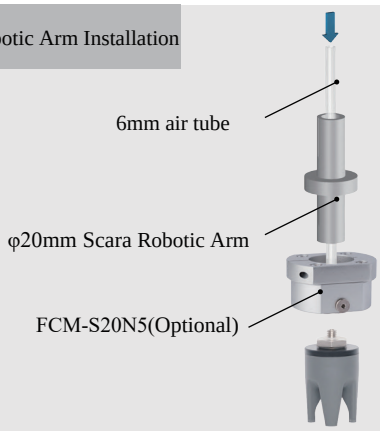

Robotic Arm Flange Side Fitting Installation

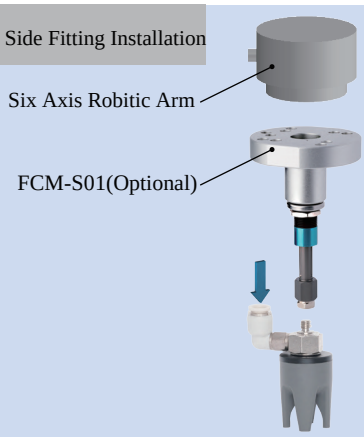

Rigid Connection Installation

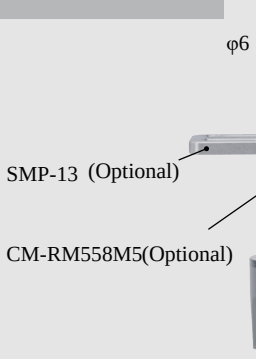

Buffer Installation

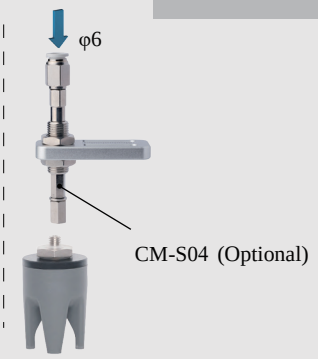

Matrix Installation

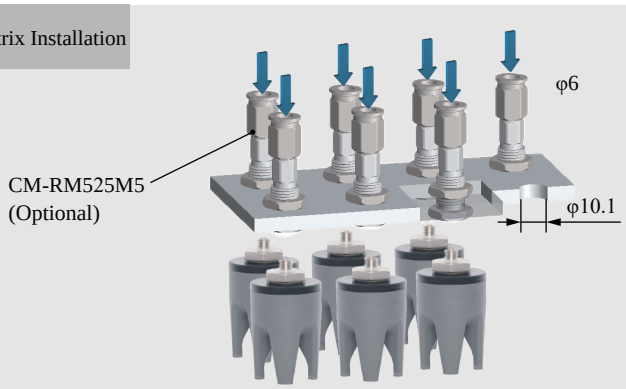

Precise Positioning Installation

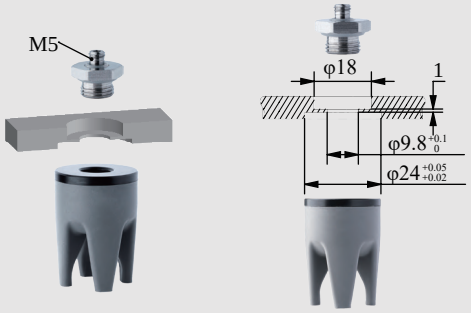

Installation of Optical Fiber Sensors

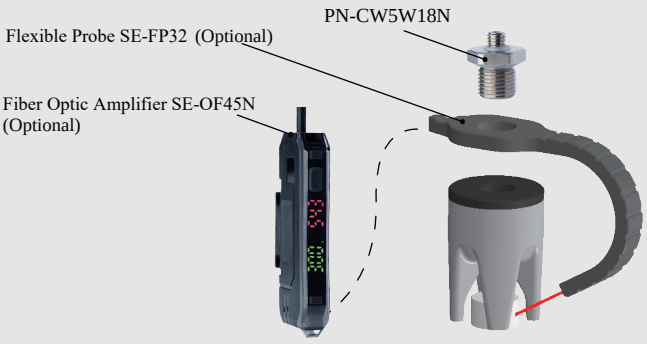



DAC-4A24[LH]/S Direct-through Anti-static H Type		DAL-4A24[LH]/S Side-through Anti-static H Type	
DAC-4A24[LHAS]/S Direct-through Anti-static Dust-free H Type		DAL-4A24[LHAS]/S Side-through Anti-static Dust-free H Type	
Weight	19g	Weight	33g



- Fingertips open under pressure state and clamp in a vacuum. Inner fingertips distance G and outer fingertips distance D can be adjusted by working pressure.It is suggested to be used with Rochu control unit.
- The Anti-static material meets the requirements of the national standard GB/T11210-2014, with a point-to-point resistance of 0.1-1000MΩ. The Anti-static Dust-free type [LHAS] is more suitable for dealing with workpieces that have dustproof requirements or are miniature and lightweight.

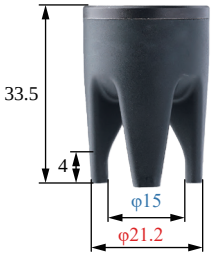



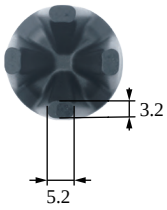

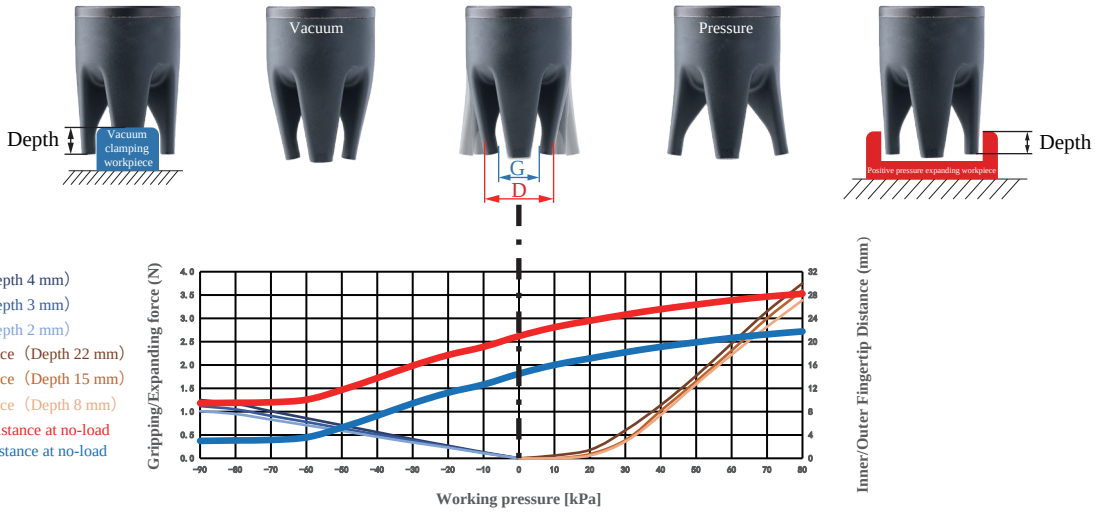

Gripping range	5.5-16mm	Gripping force	0-1.3N	Theoretical gripping load**	0-75g	Ideal gripping workpiece size*	15.5mm
Internal gripping range	24-28mm	Internal gripping force	0-3.8N	Theoretical internal gripping load**	0-225g	Ideal internal gripping workpiece size*	24mm
Joint size	M5	Life time***	1.5 million times	Contact Temperature	<220℃	Safe pressure***	<80kPa

DAC Straight Fitting Installation

Scan to watch videos



DAL Side Fitting Installation

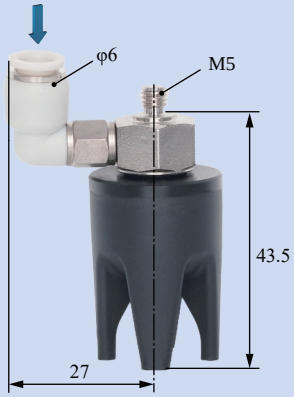

Scara Robotic Arm Installation

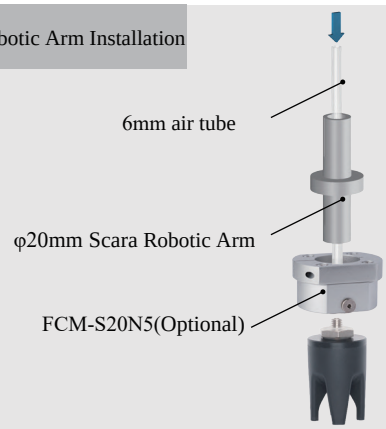

Robotic Arm Flange Side Fitting Installation

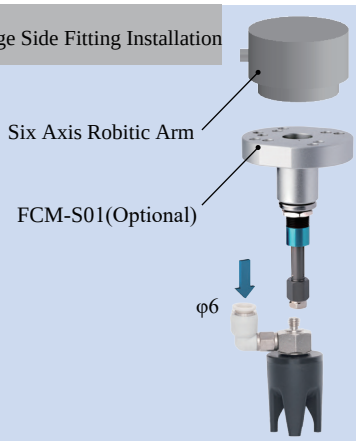

Rigid Connection Installation

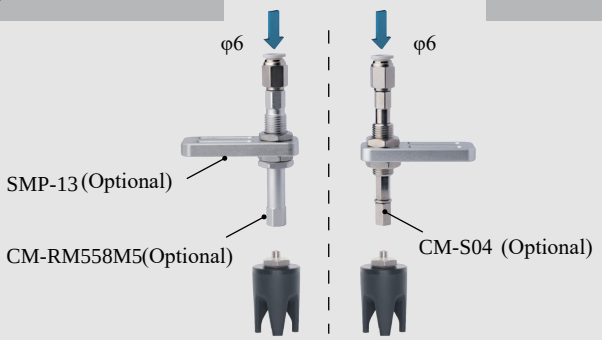

Buffer Installation

Matrix Installation

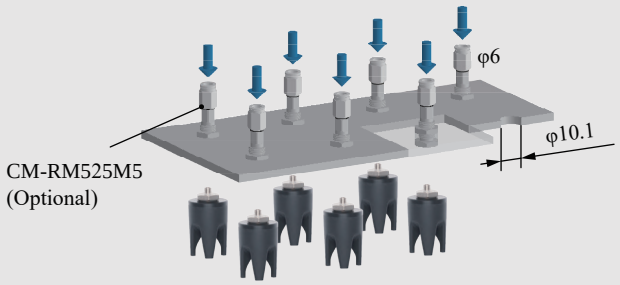

Precise Positioning Installation

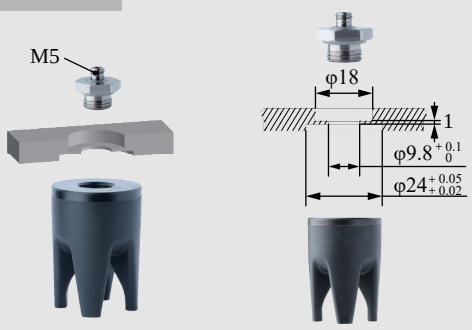

Installation of Optical Fiber Sensors



DAC-4A24[MHB]/S Direct-through Acid&Alkali Resistant Type		DAL-4A24[MHB]/S Side-through Acid&Alkali Resistant Type	
			
Weight	19g	**Weight**	33g

Product features

- Fingertips open under pressure state and clamp in a vacuum. Inner fingertips distance G and outer fingertips distance D can be adjusted by working pressure.It is suggested to be used with Rochu control unit.
- The material of [MHB] has good acid and alkali resistance. It can come into contact with workpieces containing alkaline electrolyte and can be used in the lithium battery industry.

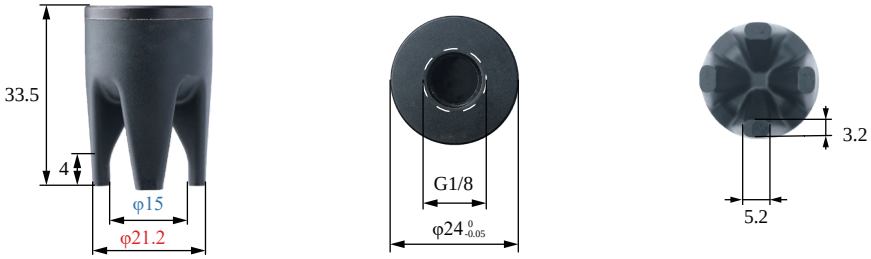



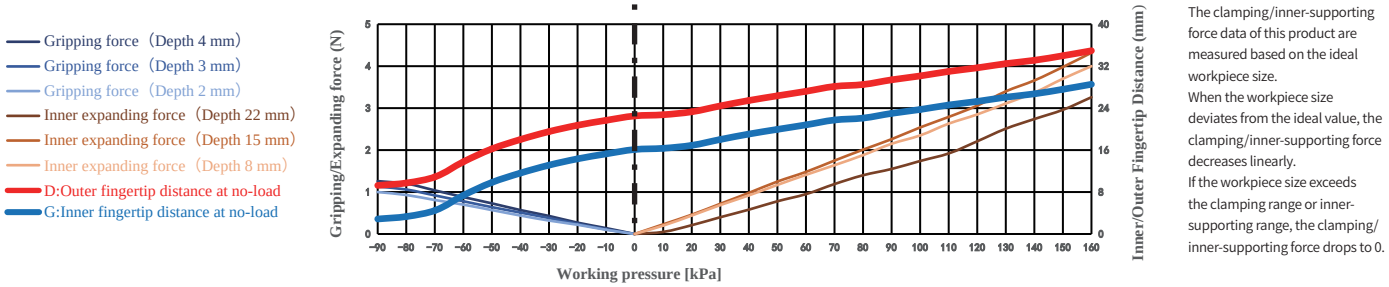

The clamping/inner-supporting force data of this product are measured based on the ideal workpiece size.
When the workpiece size deviates from the ideal value, the clamping/inner-supporting force decreases linearly.
If the workpiece size exceeds the clamping range or inner-supporting range, the clamping/inner-supporting force drops to 0.

Paremeter

Gripping range	8-16mm	Gripping force	0-1.3N	Theoretical gripping load**	0-76g	Ideal gripping workpiece size*	14mm
Internal gripping range	24-30mm	Internal gripping force	0-4.3N	Theoretical internal gripping load**	0-259g	Ideal internal gripping workpiece size*	20mm
Joint size	M5	Life time***	1.5 million times	Contact Temperature	<150°C	Safe pressure***	<160kPa

*: The width of the cuboid that generates the maximum gripping force (two-finger gripping), the outer diameter of the cylinder (multi-finger gripping), the width of the square hole (two-finger internal gripping), or the inner diameter of the circular hole (multi-finger internal gripping);
**: Only the theoretical load of the ideal workpiece under standard working conditions is marked for reference and comparison. The real load capacity is also affected by factors such as the surface structure and roughness of the workpiece. Please take the measured data as the standard;
***: The working air pressure and the surface roughness of the workpiece in the usage scenario may have different degrees of impact on the life-time. Please configure Rochu control Unit. Do not exceed the safe air pressure.

DAC Straight Fitting Installation

Scan to watch videos



DAL Side Fitting Installation

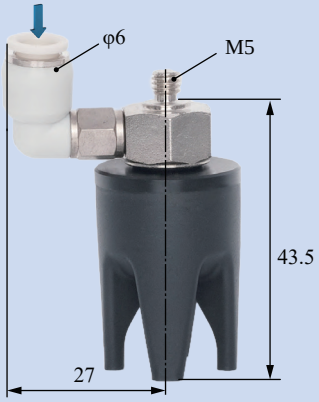

Scara Robotic Arm Installation



Robotic Arm Flange Side Fitting Installation

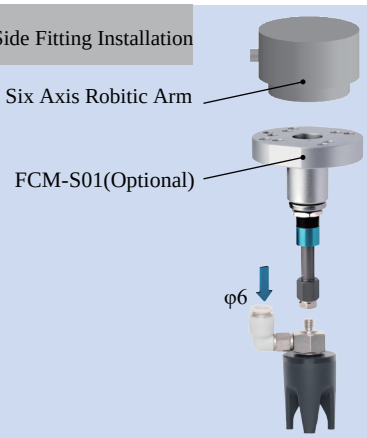

Rigid Connection Installation

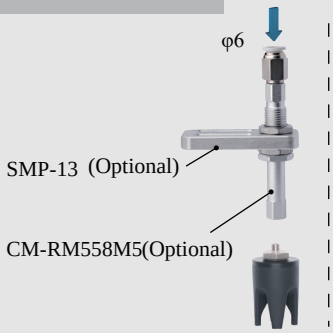

Buffer Installation

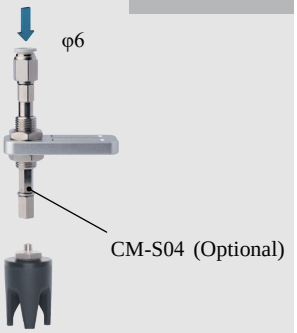

Matrix Installation

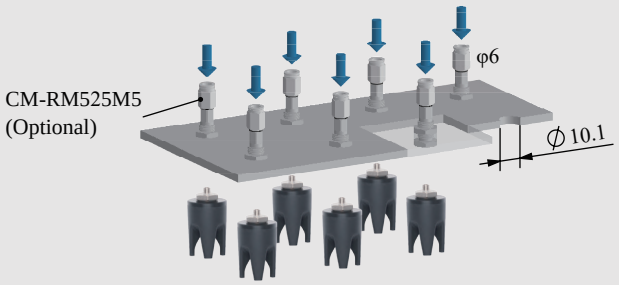

Precise Positioning Installation

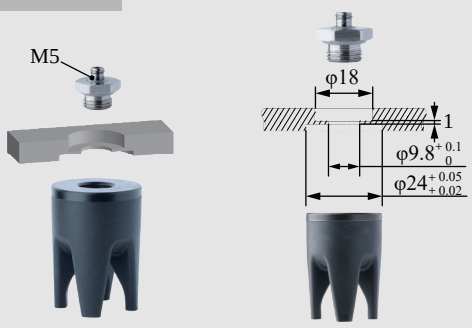

Installation of Optical Fiber Sensors

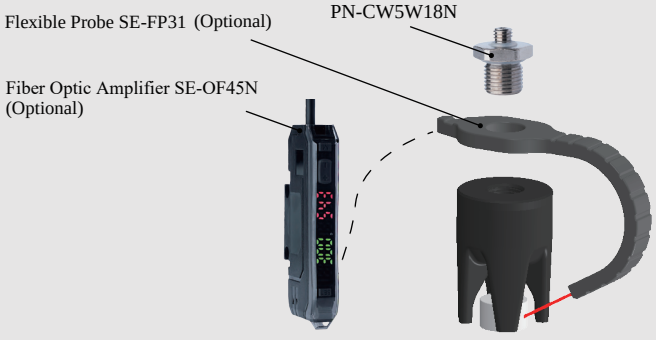

B-4A24[MHB]/S

	DAC-4A24[HW]/S Direct-through H Type		DAL-4A24[HW]/S Side-through H Type		
	DAC-4A24[HWAS]/S Direct-through Dust-free H Type		DAL-4A24[HWAS]/S Side-through Dust-free H Type		
	Weight	18.6g	Weight	32.5g	

- Fingertip open under pressure and clamped in a vacuum. Fingertip distance G can be adjusted by working pressure.It is suggested to be used with Rochu control unit.
- Soft beak material is divided into Strengthen Material [HW] and Dust-free Strengthen Material [HWAS]. When the workpiece is light, or very soft, easy to adhere to adsorp on the soft beak, Dust-free Strengthen Material [HWAS] is preferred.
- The soft beak has a white appearance and can provide a high-contrast white background for dark workpieces at the machine vision inspection station.

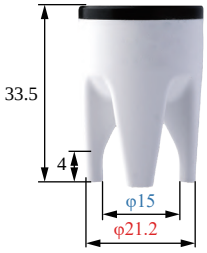



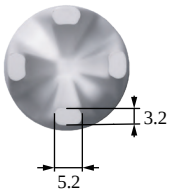











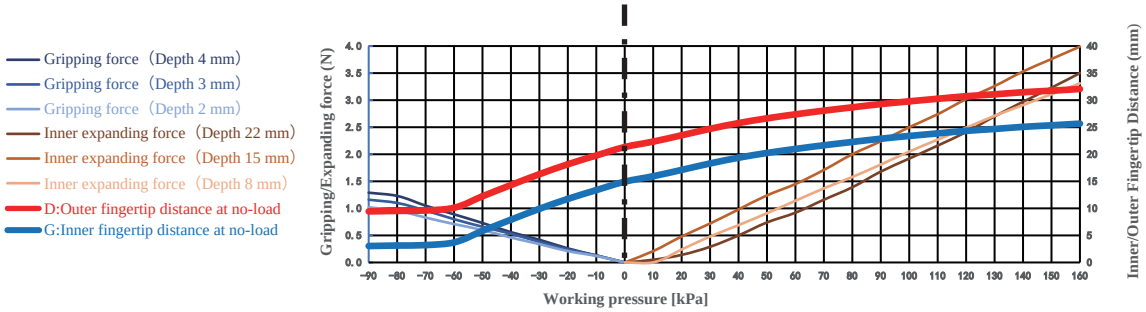

Gripping range	5.5-16mm	Gripping force	0-1.3N	Theoretical gripping load**	0-77g	Ideal gripping workpiece size*	15.5mm
Internal gripping range	24-30mm	Internal gripping force	0-4N	Theoretical internal gripping load**	0-239g	Ideal internal gripping workpiece size*	24mm
Joint size	M5	Life time***	1.5 million times	Contact Temperature	<220°C	Safe pressure***	<160kPa

DAC Straight Fitting Installation

Scan to watch videos



DAL Side Fitting Installation

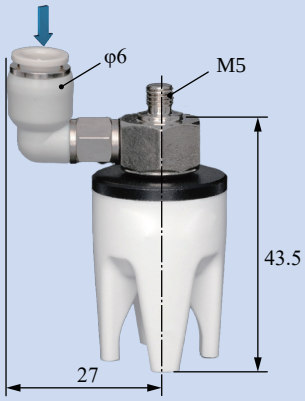

Scara Robotic Arm Installation

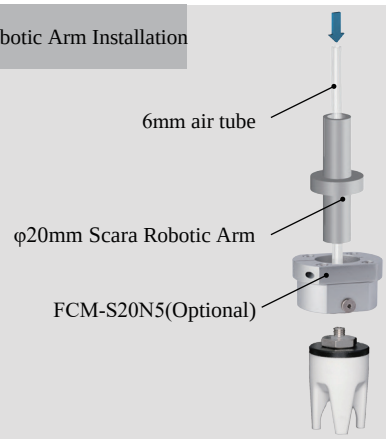

Robotic Arm Flange Side Fitting Installation

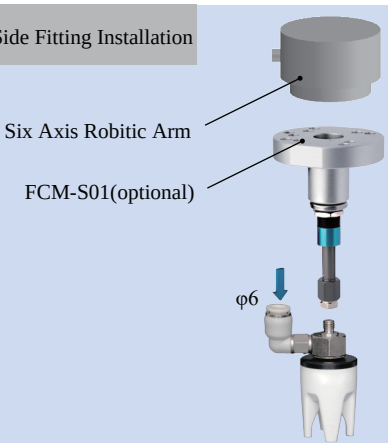

Rigid Connection Installation



Buffer Installation

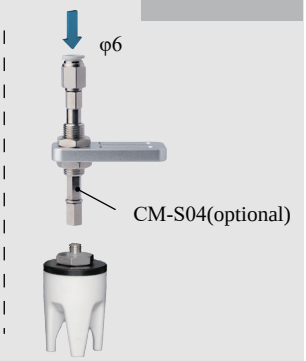

Matrix Installation

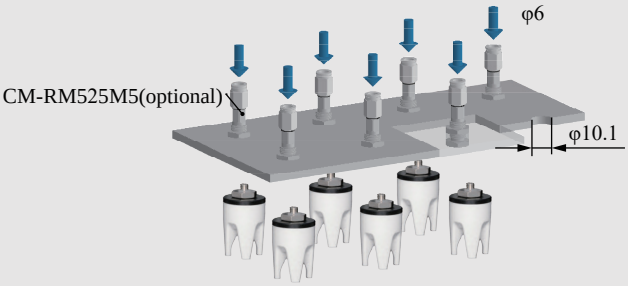

Precise Positioning Installation

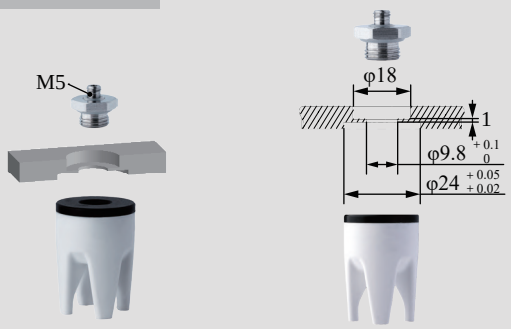

Installation of Optical Fiber Sensors



DAC-4G27[H]/SN Direct-through H Type	DAS-4G27[H]/SN Direct-through Precision Positioning H Type	DAL-4G27[H]/SN Side-through H Type	DAM-4G27[H]/SN Multi-way Precision Positioning H Type
DAC-4G27[HAS]/SN Direct-through Dust-free H Type	DAS-4G27[HAS]/SN Direct-through Precision Positioning H Type	DAL-4G27[HAS]/SN Side-through Dust-free H Type	DAM-4G27[HAS]/SN Multi-way Precision Positioning Dust-free H Type
			
Weight 17.5g	Weight 24.7g	Weight 32g	Weight 28.9g

- Fingertip open under pressure and clamped in a vacuum. Fingertip distance G can be adjusted by working pressure.It is suggested to be used with Rochu control unit.
- Soft beak material is divided into Normal Material [H] and Dust-free Normal Material [HAS]. When the workpiece is light, or very soft, easy to adhere to adsorp on the soft beak, Dust-free Normal Material [HAS] is preferred.
- Food-grade material, direct food contact approved.

Scan to watch videos

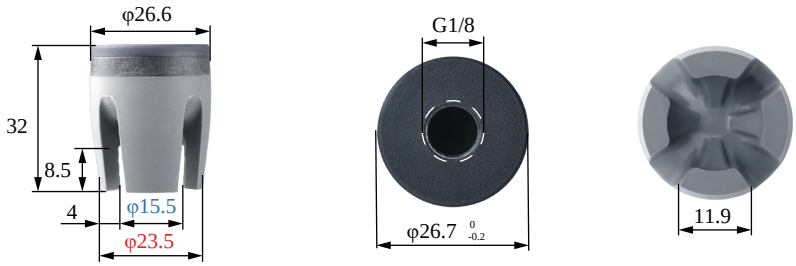

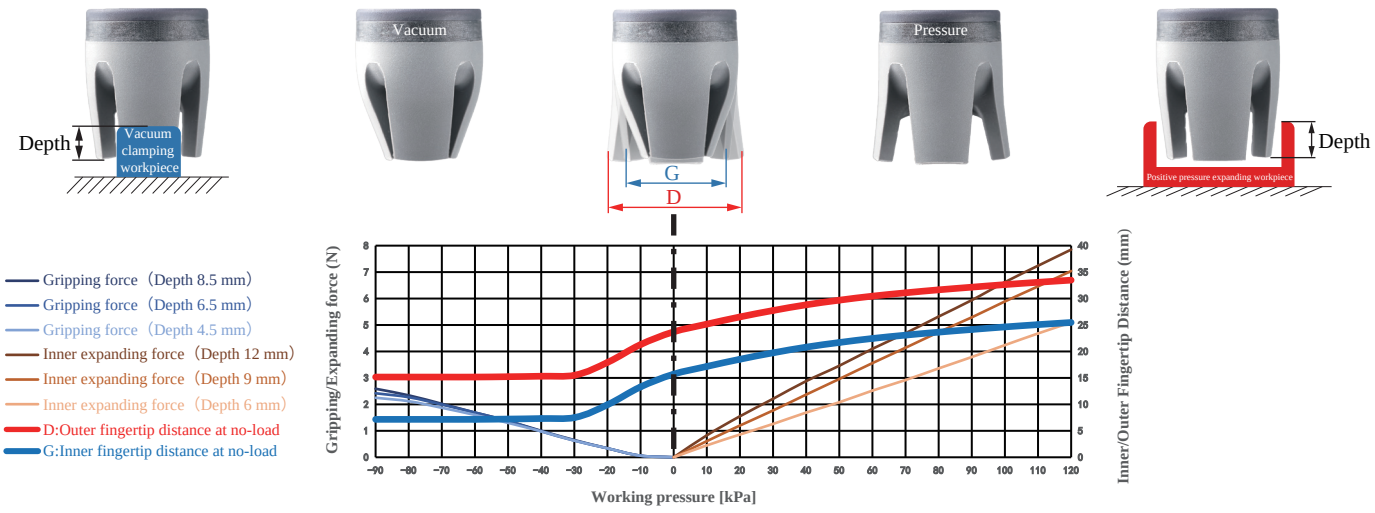

Gripping range	8-22mm	Gripping force	0-2.6N	Theoretical gripping load**	0-155g	Ideal gripping workpiece size*	14mm
Internal gripping range	23-28mm	Internal gripping force	0-7.9N	Theoretical internal gripping load**	0-471g	Ideal internal gripping workpiece size*	24mm
Joint size	G1/8	Life time***	1.5 million times	Contact Temperature	<220°C	Safe pressure***	<120kPa

DACModule
(Direct-through)



DASModule
(Precise Positioning Direct-through)



DALModule
(Side-through)

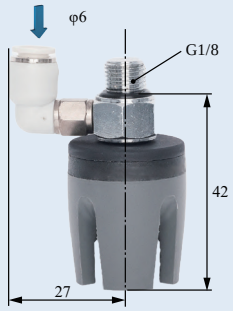

DAMModule
(Precise Positioning Multiple-through)

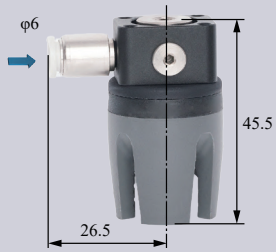

DAS Detection



DAM Precise Positioning + Detection

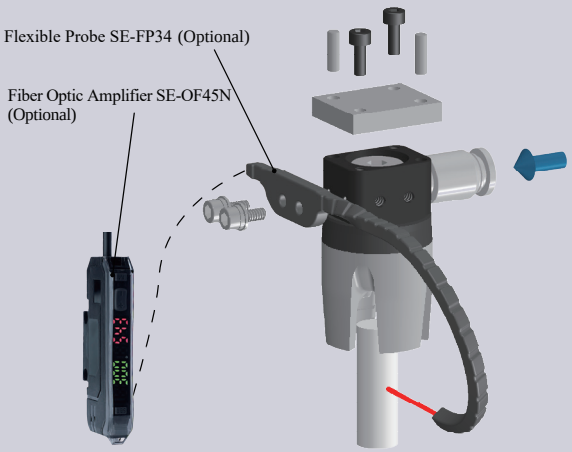

DAS Precise Positioning and Direct-through Installation

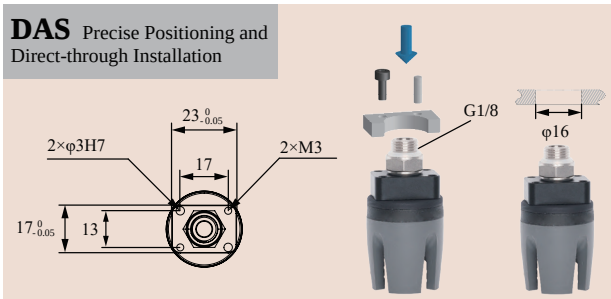

DAM
Precise Positioning and Multiple-through Installation

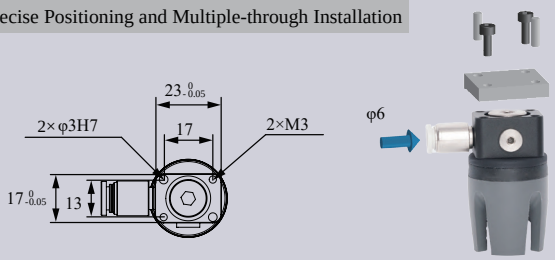

DAS
Matrix Installation

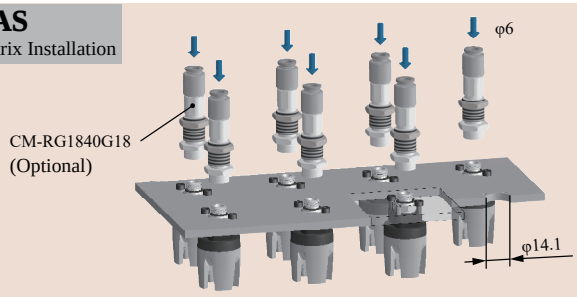

DAL
Robot Arm Flange Side-through Installation

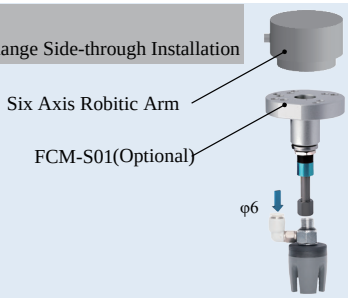

DAC Scara Scara Robot Arm Installation

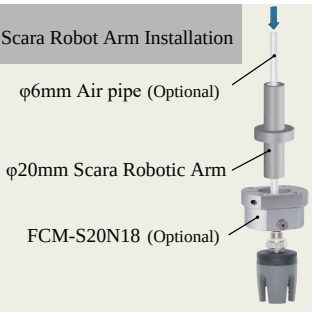

DAC
Rigid Connection Installation

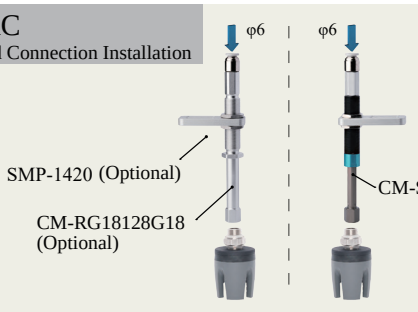

DAC
Buffer Installation

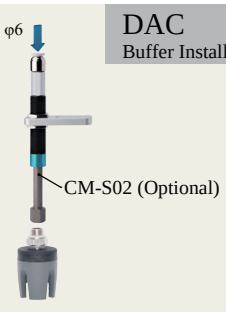

	DAC-4A30[P]/M Direct-through P Type		DAL-4A30[P]/M Side-through P Type	
	DAC-4A30[PAS]/M Direct-through Dust-free P Type		DAL-4A30[PAS]/M Side-through Dust-free P Type	
	Weight	43.4g	Weight	60.6g

- Fingertips open under pressure state and clamp in a vacuum. Inner fingertips distance G and outer fingertips distance D can be adjusted by working pressure.It is suggested to be used with Rochu control unit.
- Soft beak material is divided into Normal Material [P] and Dust-free Normal Material [PAS]. When the workpiece is light, or very soft, easy to adhere to adsorp on the soft beak, Dust-free Normal Material [PAS] is preferred.
- Food-grade material, direct food contact approved.

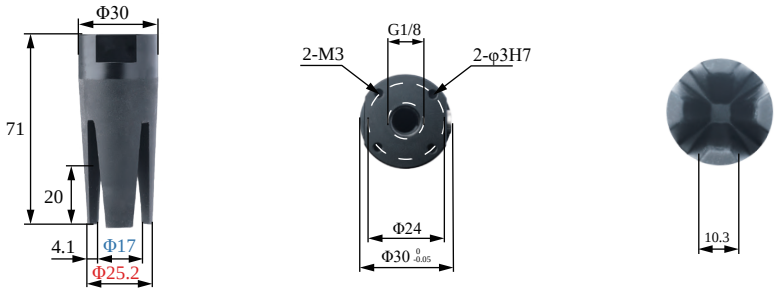

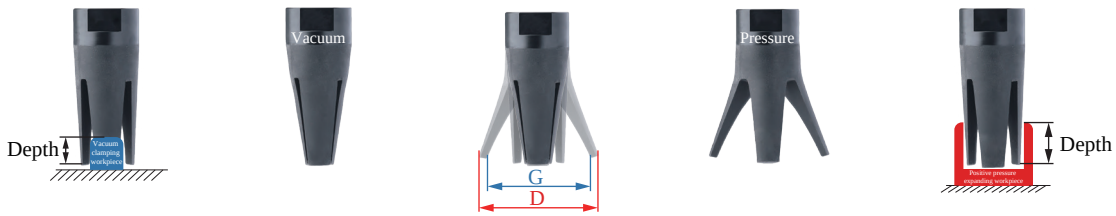

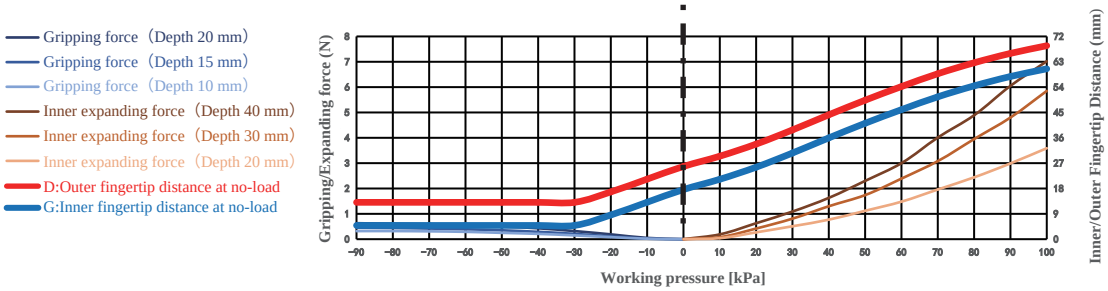

Gripping range	7-15mm	Gripping force	0-0.6N	Theoretical gripping load**	0-38g	Ideal gripping workpiece size*	11mm
Internal gripping range	24-50mm	Internal gripping force	0-7N	Theoretical internal gripping load**	0-421g	Ideal internal gripping workpiece size*	29mm
Joint size	M5	Life time***	1.5 million times	Contact Temperature	<220°C	Safe pressure***	<100kPa

DAC Straight Fitting Installation

Scan to watch videos



DAL Side Fitting Installation



Scara Robotic Arm Installation

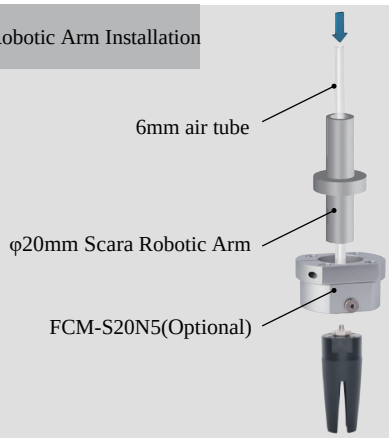

Robotic Arm Flange Side Fitting Installation

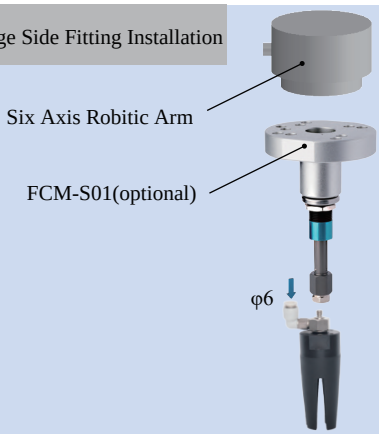

Rigid Connection Installation

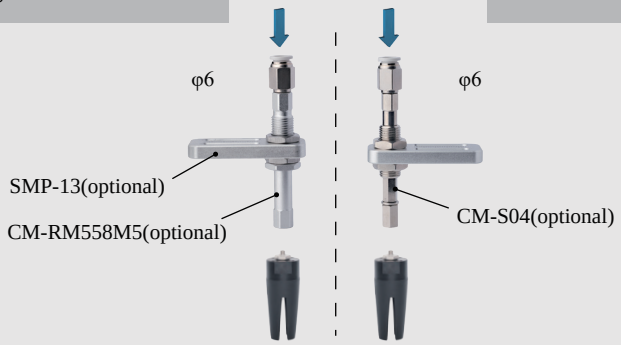

Buffer Installation

Matrix Installation

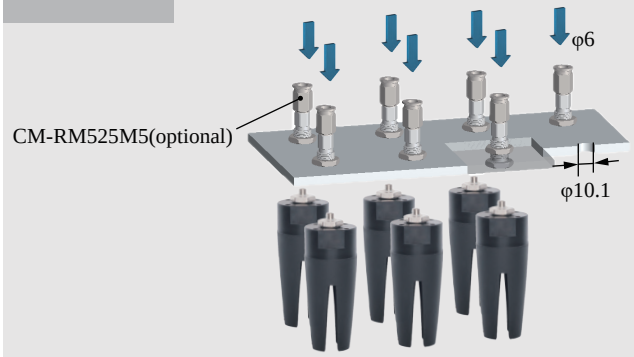

Precise Positioning Installation

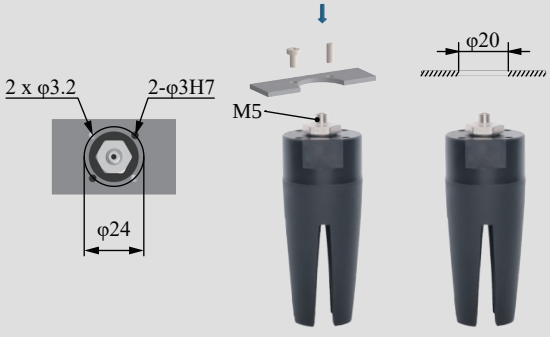

Installation of Optical Fiber Sensors





DAC-4B30[H]/S Direct-through H Type		DAL-4B30[H]/S Side-through H Type	
DAC-4B30[HAS]/S Direct-through Dust-free H Type		DAL-4B30[HAS]/S Side-through Dust-free H Type	
Weight	28g	Weight	40.4g



- Fingertips open under pressure state and clamp in a vacuum. Inner fingertips distance G and outer fingertips distance D can be adjusted by working pressure.It is suggested to be used with Rochu control unit.
- Soft beak material is divided into Normal Material [H] and Dust-free Normal Material [HAS]. When the workpiece is light, or very soft, easy to adhere to adsorp on the soft beak, Dust-free Normal Material [HAS] is preferred.
- Food-grade material, direct food contact approved.



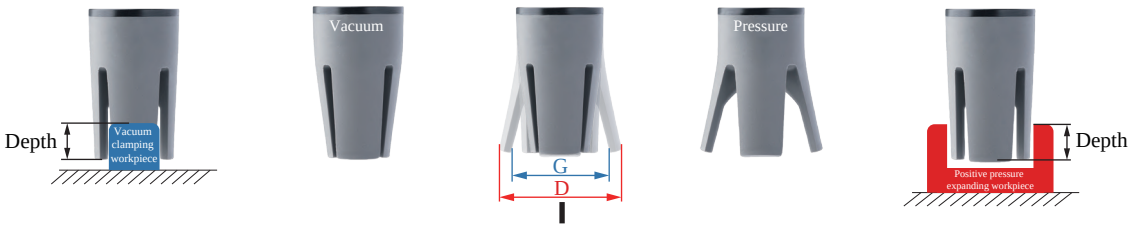

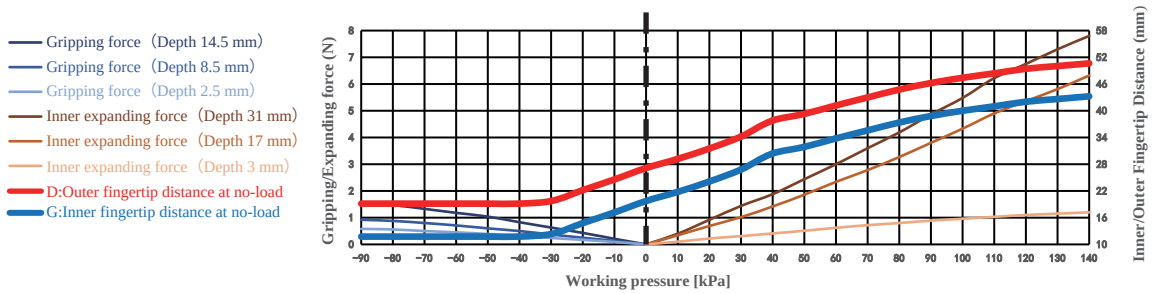

Gripping range	13-23mm	Gripping force	0-1.5N	Theoretical gripping load**	0-92g	Ideal gripping workpiece size*	21mm
Internal gripping range	26-45mm	Internal gripping force	0-7.8N	Theoretical internal gripping load**	0-469g	Ideal internal gripping workpiece size*	28mm
Joint size	M5	Life time***	1.5 million times	Contact Temperature	<220°C	Safe pressure***	<140kPa

DAC Straight Fitting Installation

Scan to watch videos



DAL Side Fitting Installation

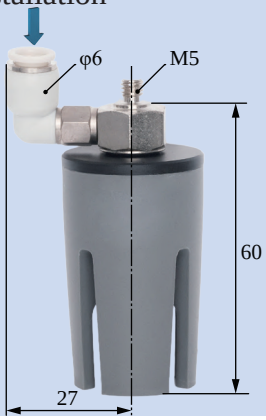

Scara Robotic Arm Installation

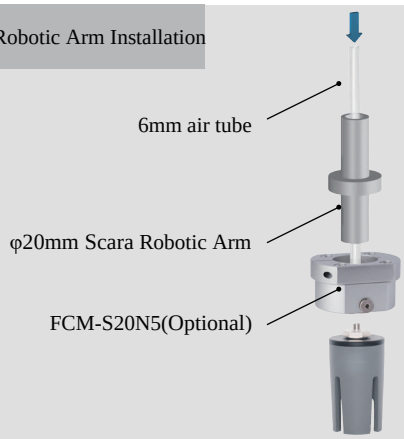

Robotic Arm Flange Side Fitting Installation

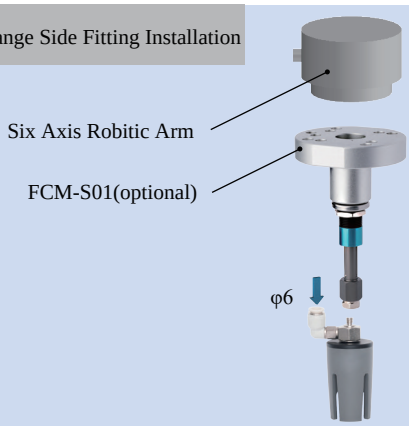

Rigid Connection Installation

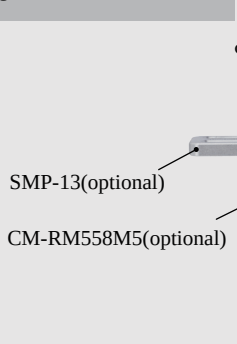

Buffer Installation



Matrix Installation

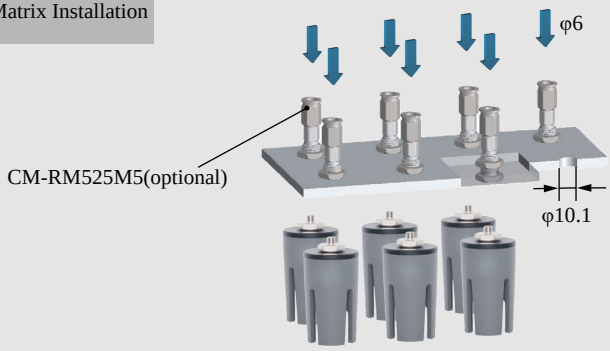

Precise Positioning Installation

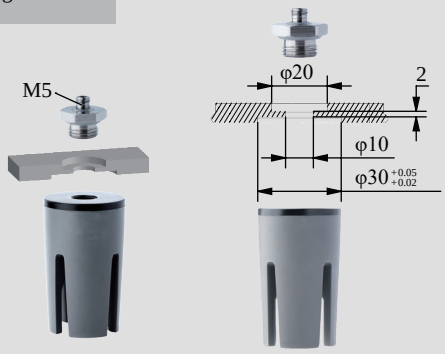

Installation of Optical Fiber Sensors





DAC-4D30[H]/M Direct-through H Type		DAL-4D30[H]/M Side-through H Type	
DAC-4D30[HAS]/M Direct-through Dust-free H Type		DAL-4D30[HAS]/M Side-through Dust-free H Type	
Weight	46.1g	Weight	57.8g



- Fingertips open under pressure state and clamp in a vacuum. Inner fingertips distance G and outer fingertips distance D can be adjusted by working pressure.It is suggested to be used with Rochu control unit.
- Soft beak material is divided into Normal Material [H] and Dust-free Normal Material [HAS]. When the workpiece is light, or very soft, easy to adhere to adsorp on the soft beak, Dust-free Normal Material [HAS] is preferred.
- Food-grade material, direct food contact approved.



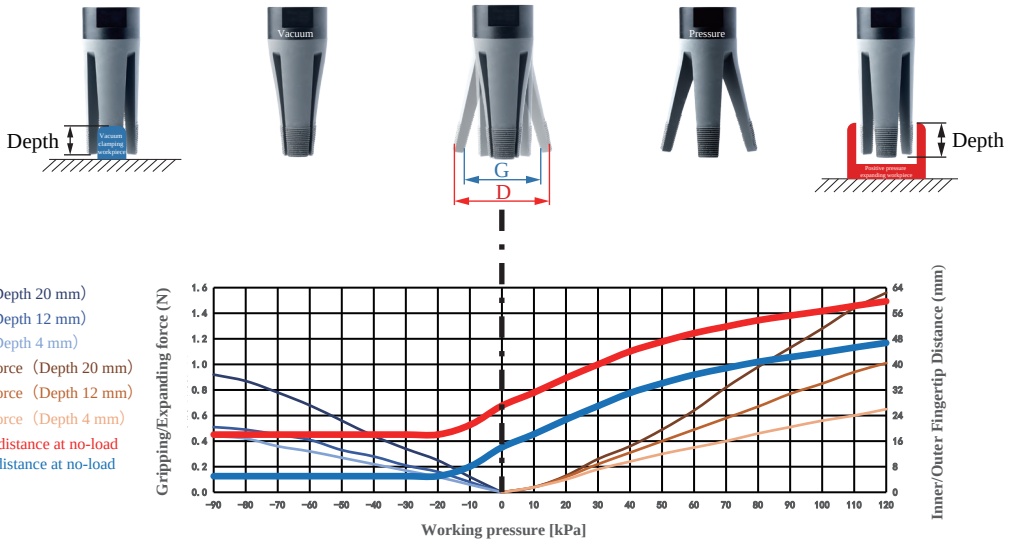

Gripping range	7-13mm	Gripping force	0-0.9N	Theoretical gripping load**	0-55g	Ideal gripping workpiece size*	11mm
Internal gripping range	25-45mm	Internal gripping force	0-1.6 N	Theoretical internal gripping load**	0-94g	Ideal internal gripping workpiece size*	30mm
Joint size	G1/8	Life time***	1.5 million times	Contact Temperature	<220℃	Safe pressure***	<120kPa

DAC Straight Fitting Installation



DAL Side Fitting Installation

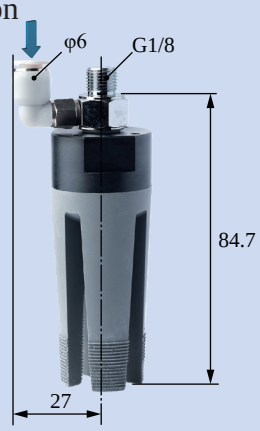

Scara Robotic Arm Installation

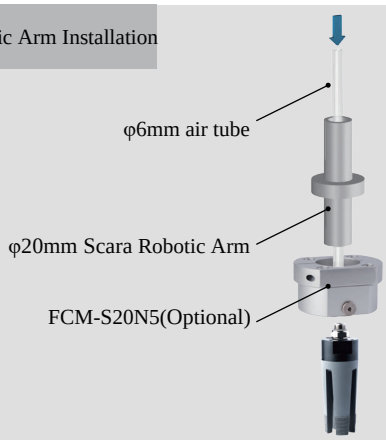

Robotic Arm Flange Side Fitting Installation

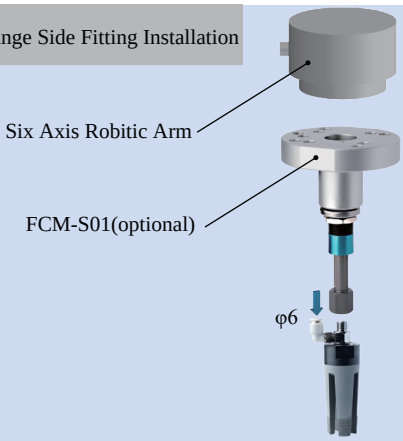

Rigid Connection Installation

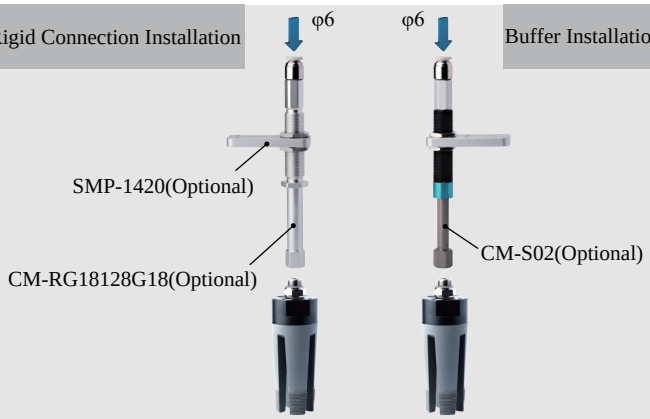

Buffer Installation

Matrix Installation

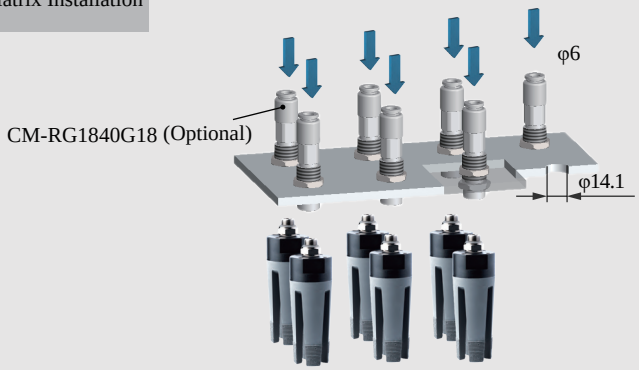

Precise Positioning Installation



Installation of Optical Fiber Sensors



	DAC-4B32[P]/S Direct-through P Type		DAL-4B32[P]/S Side-through P Type		
	DAC-4B32[PAS]/S Direct-through Dust-free P Type		DAL-4B32[PAS]/S Side-through Dust-free P Type		
	Weight	37.9g	Weight	52.4g	

- Fingertips open under pressure state and clamp in a vacuum. Inner fingertips distance G and outer fingertips distance D can be adjusted by working pressure.It is suggested to be used with Rochu control unit.
- Soft beak material is divided into Normal Material [P] and Dust-free Normal Material [PAS]. When the workpiece is light, or very soft, easy to adhere to adsorp on the soft beak, Dust-free Normal Material [PAS] is preferred.
- Food-grade material, direct food contact approved.

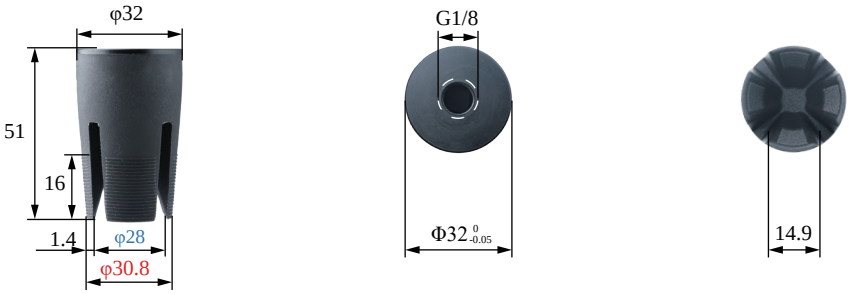

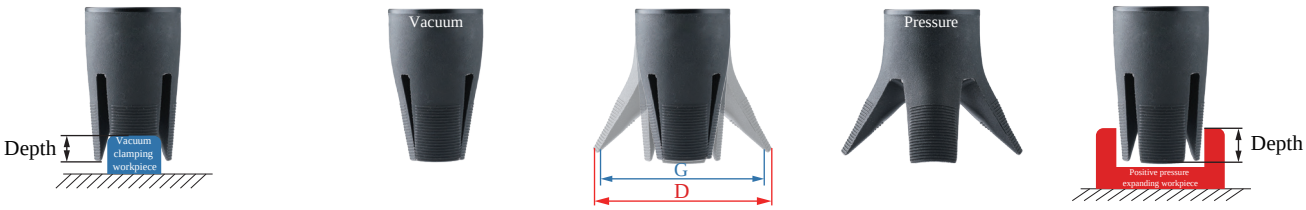

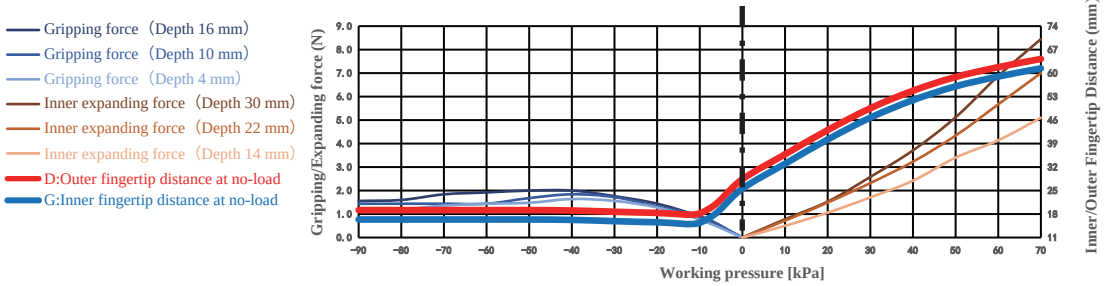

Gripping range	20-30mm	Gripping force	0-1.6N	Theoretical gripping load**	0-94g	Ideal gripping workpiece size*	26mm
Internal gripping range	28-50mm	Internal gripping force	0-8.5N	Theoretical internal gripping load**	0-507g	Ideal internal gripping workpiece size*	29mm
Joint size	G1/8	Life time***	1.5 million times	Contact Temperature	<220°C	Safe pressure***	<70kPa

DAC Straight Fitting Installation

Scan to watch videos



DAL Side Fitting Installation



Scara Robotic Arm Installation

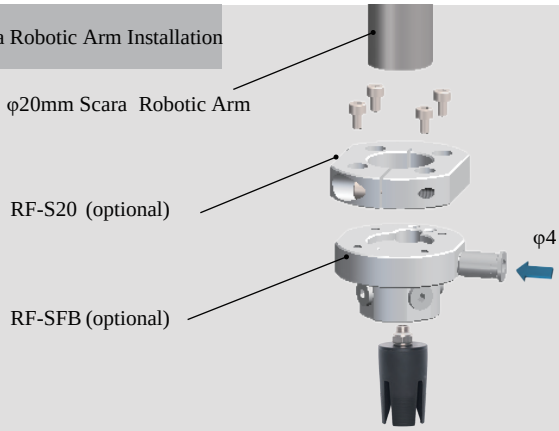

Robotic Arm Flange Side Fitting Installation

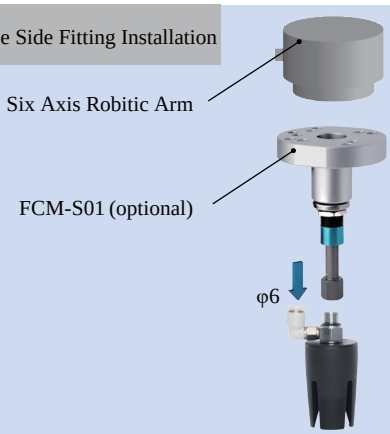

Rigid Connection Installation

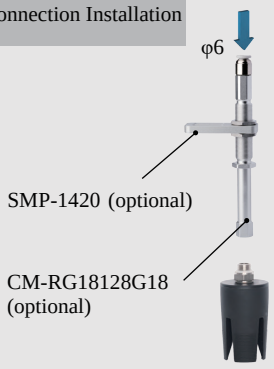

Buffer Installation



Matrix Installation

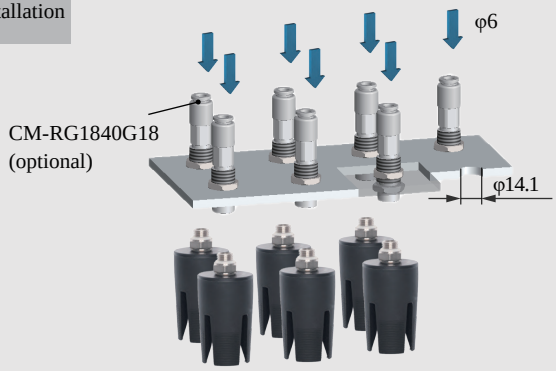

Precise Positioning Installation

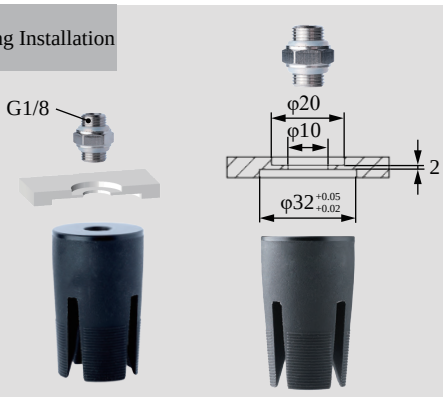

Installation of Optical Fiber Sensors



	DAC-4B32[H]/S Direct-through H Type		DAL-4B32[H]/S Side-through H Type		
	DAC-4B32[HAS]/S Direct-through Dust-free H Type		DAL-4B32[HAS]/S Side-through Dust-free H Type		
	Weight	37.9g	Weight	52.4g	

- Fingertips open under pressure state and clamp in a vacuum. Inner fingertips distance G and outer fingertips distance D can be adjusted by working pressure.It is suggested to be used with Rochu control unit.
- Soft beak material is divided into Normal Material [H] and Dust-free Normal Material [HAS]. When the workpiece is light, or very soft, easy to adhere to adsorp on the soft beak, Dust-free Normal Material [HAS] is preferred.
- Food-grade material, direct food contact approved.

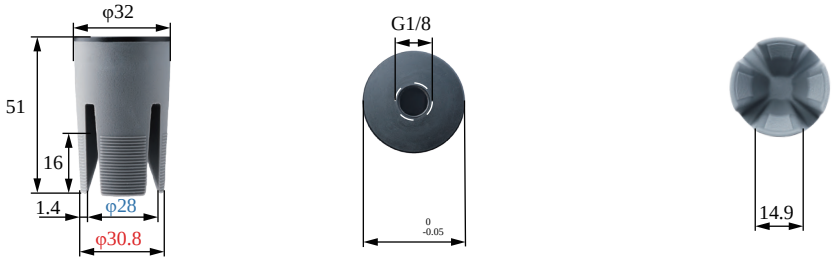

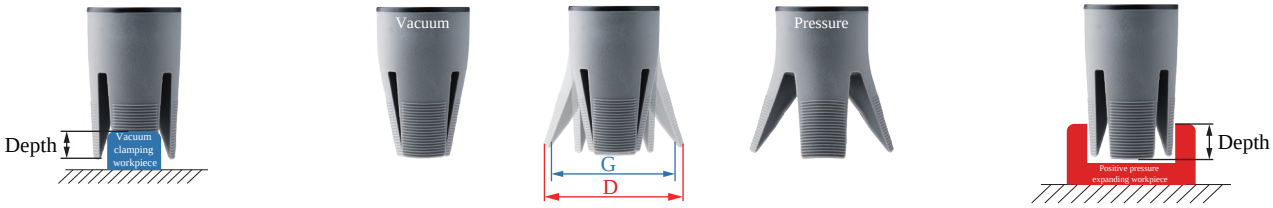

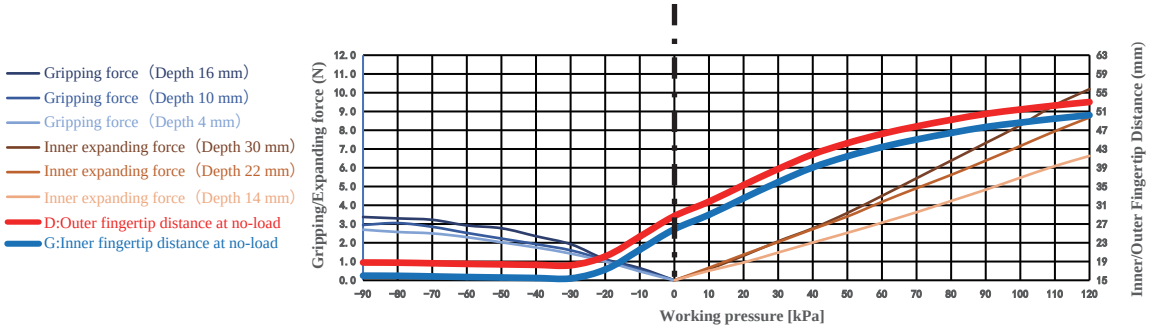

Gripping range	20-30mm	Gripping force	0-3.4N	Theoretical gripping load**	0-202g	Ideal gripping workpiece size*	26mm
Internal gripping range	26-45mm	Internal gripping force	0-10.2N	Theoretical internal gripping load**	0-611g	Ideal internal gripping workpiece size*	29mm
Joint size	G1/8	Life time***	1.5 million times	Contact Temperature	<220℃	Safe pressure***	<120kPa

DAC Straight Fitting Installation

Scan to watch videos



DAL Side Fitting Installation

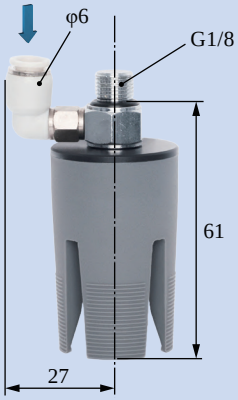

Scara Robotic Arm Installation

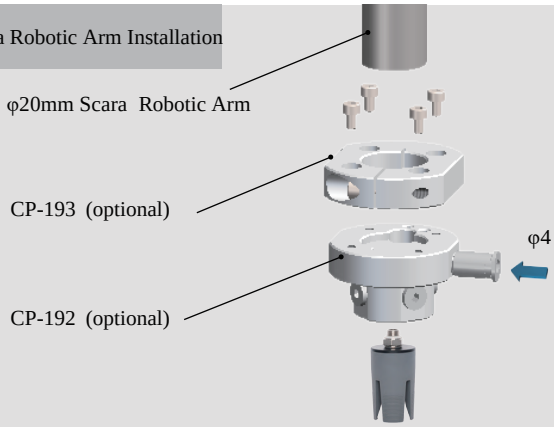

Robotic Arm Flange Side Fitting Installation

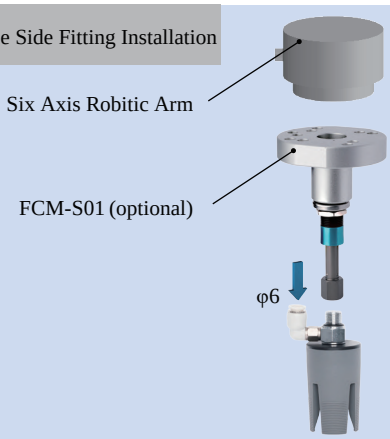

Rigid Connection Installation

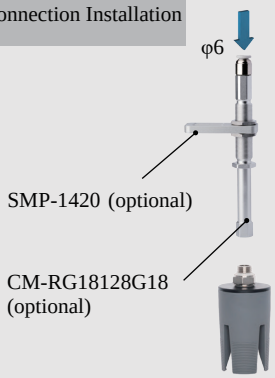

Buffer Installation



Matrix Installation

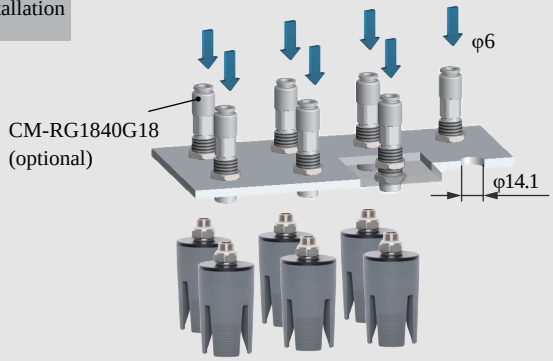

Precise Positioning Installation

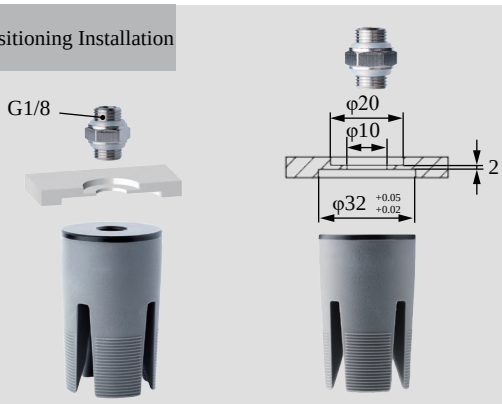

Installation of Optical Fiber Sensors

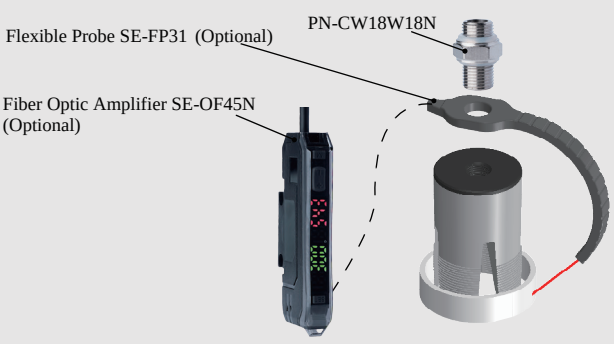

	DAC-4B32[HH]/S Direct-through oil-resistant type		DAL-4B32[HH]/S Side-through oil-resistant Type	
				
	Weight	37.9g	**Weight**	52.4g

Product features

- Fingertips open under pressure state and clamp in a vacuum. Inner fingertips distance G and outer fingertips distance D can be adjusted by working pressure.It is suggested to be used with Rochu control unit.
- [HH] Material features excellent wear resistance and oil resistance. It allows long-term contact with workpieces contaminated by heavy oils (lubricating oil, gear oil, hydraulic oil, etc.) and is suitable for metal processing applications.

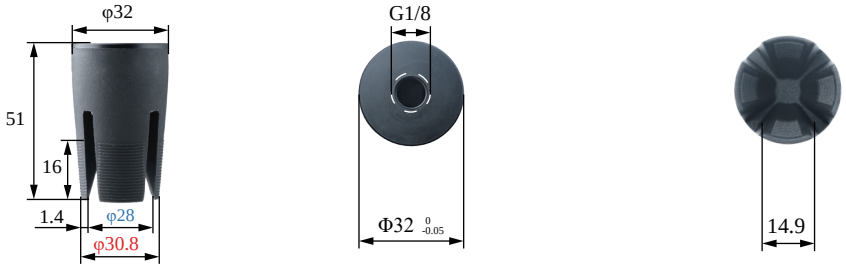

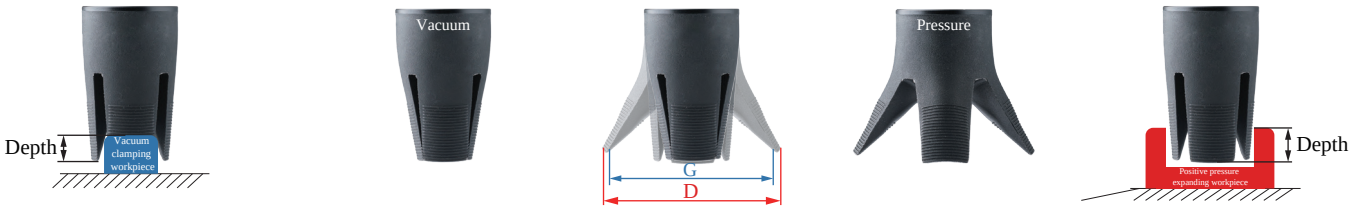

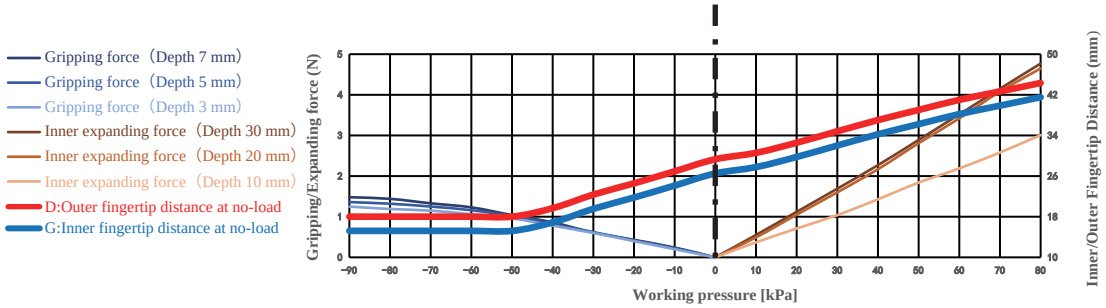

The clamping/inner-supporting force data of this product are measured based on the ideal workpiece size.
When the workpiece size deviates from the ideal value, the clamping/inner-supporting force decreases linearly.
If the workpiece size exceeds the clamping range or inner-supporting range, the clamping/inner-supporting force drops to 0.

Paremeter

Gripping range	20-30mm	Gripping force	0-4.8N	Theoretical gripping load**	0-288g	Ideal gripping workpiece size*	26mm
Internal gripping range	26-40mm	Internal gripping force	0-1.5N	Theoretical internal gripping load**	0-89g	Ideal internal gripping workpiece size*	29mm
Joint size	G1/8	Life time***	1.5 million times	Contact Temperature	<150℃	Safe pressure***	<80kPa

*: The width of the cuboid that generates the maximum gripping force (two-finger gripping), the outer diameter of the cylinder (multi-finger gripping), the width of the square hole (two-finger internal gripping), or the inner diameter of the circular hole (multi-finger internal gripping);
**: Only the theoretical load of the ideal workpiece under standard working conditions is marked for reference and comparison. The real load capacity is also affected by factors such as the surface structure and roughness of the workpiece. Please take the measured data as the standard;
***: The working air pressure and the surface roughness of the workpiece in the usage scenario may have different degrees of impact on the life-time. Please configure Rochu control Unit. Do not exceed the safe air pressure.

DAC Straight Fitting Installation



DAL Side Fitting Installation

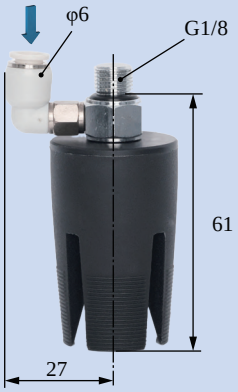

Scara Robotic Arm Installation

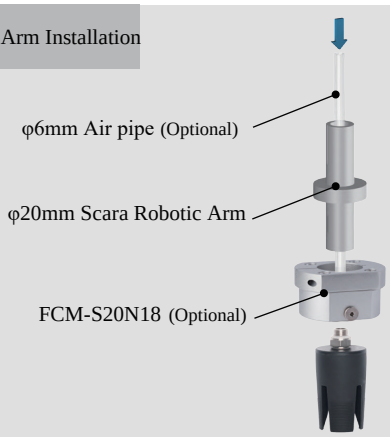

Robotic Arm Flange Side Fitting Installation

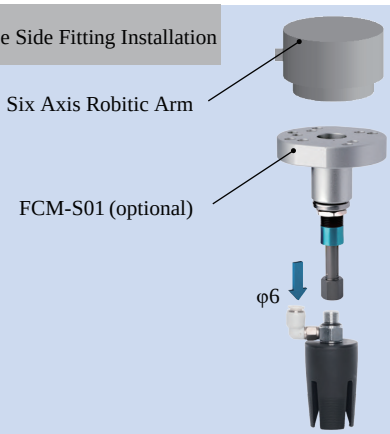

Rigid Connection Installation

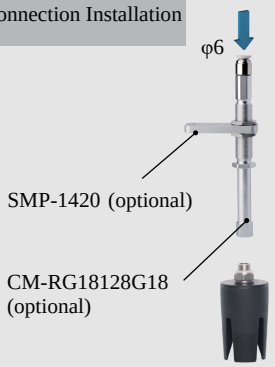

Buffer Installation



Matrix Installation

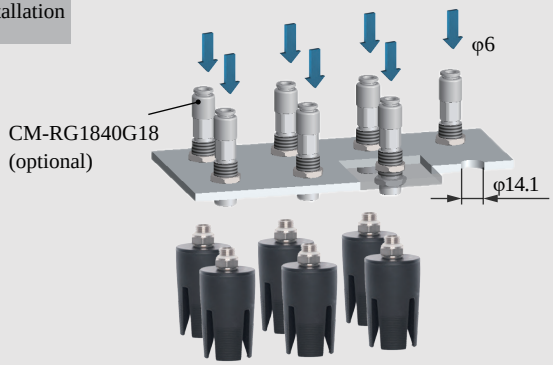

Precise Positioning Installation

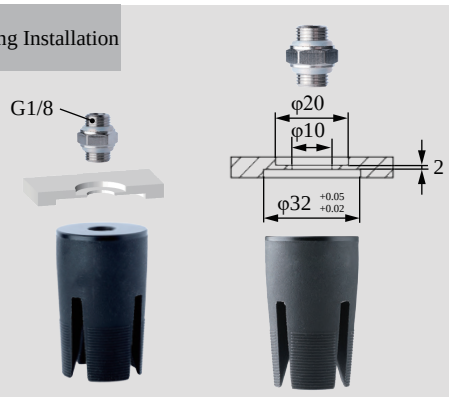

Installation of Optical Fiber Sensors



DAC-4G34[H]/SN Direct-through H Type	DAS-4G34[H]/SN Direct-through Precision Positioning H Type	DAL-4G34[H]/SN Side-through H Type	DAM-4G34[H]/SN Multi-way Precision Positioning H Type
DAC-4G34[HAS]/SN Direct-through Dust-free H Type	DAS-4G34[HAS]/SN Direct-through Precision Positioning H Type	DAL-4G34[HAS]/SN Side-through Dust-free H Type	DAM-4G34[HAS]/SN Multi-way Precision Positioning Dust-free H Type
			
Weight 25.5g	Weight 32.7g	Weight 40g	Weight 36.9g

- Fingertips open under pressure state and clamp in a vacuum. Inner fingertips distance G can be adjusted by working pressure.It is suggested to be used with Rochu control unit.
- When soft grippers contact workpieces,especially those with dust-prevention needs,or miniature,light-weight and easily-adsorbable ones,choose dust-free material [HAS] preferentially.
- Food-grade material, direct food contact approved.

Scan to watch videos

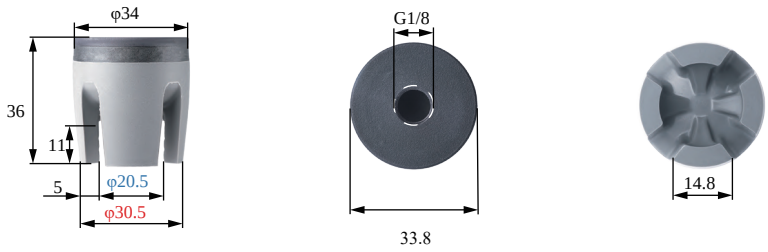

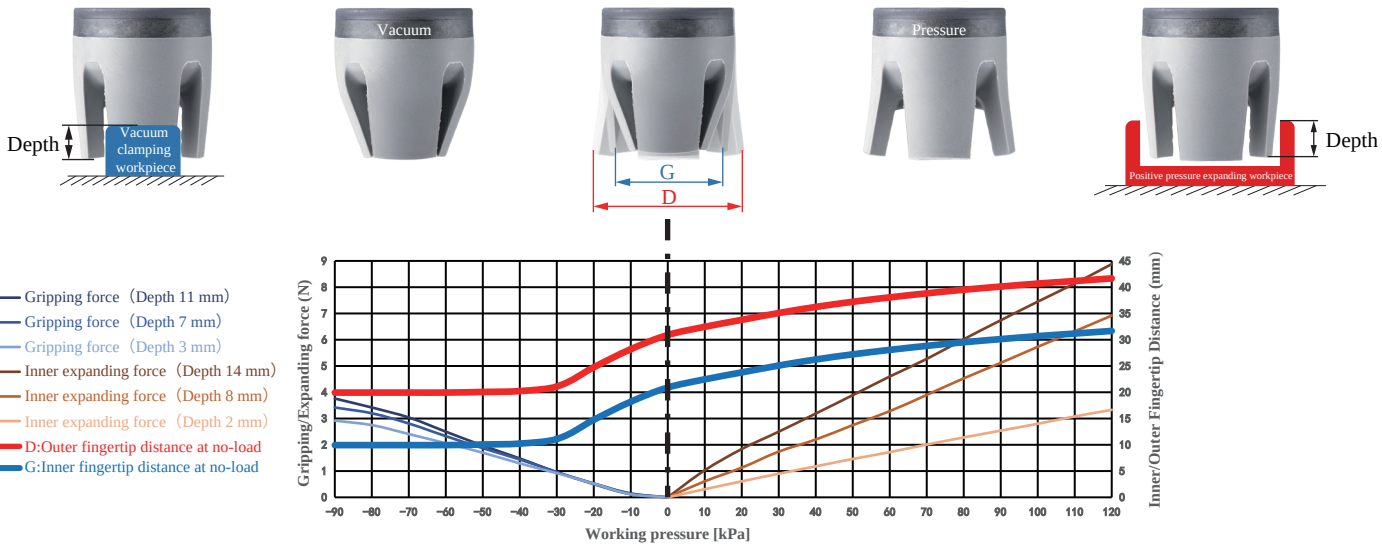

Gripping range	12-24mm	Gripping force	0-3.8N	Theoretical gripping load**	0-226g	Ideal gripping workpiece size*	18mm
Internal gripping range	30-35mm	Internal gripping force	0-8.9N	Theoretical internal gripping load**	0-533g	Ideal internal gripping workpiece size*	31mm
Joint size	G1/8	Life time***	1.5 million times	Contact Temperature	<220°C	Safe pressure***	<120kPa

DACModule
(Direct-through)



DASModule
(Precise Positioning Direct-through)



DALModule
(Side-through)



DAMModule
(Precise Positioning Multiple-through)

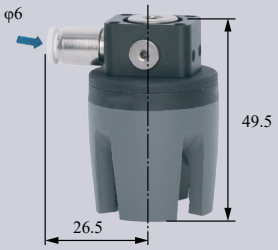

DAS Detection

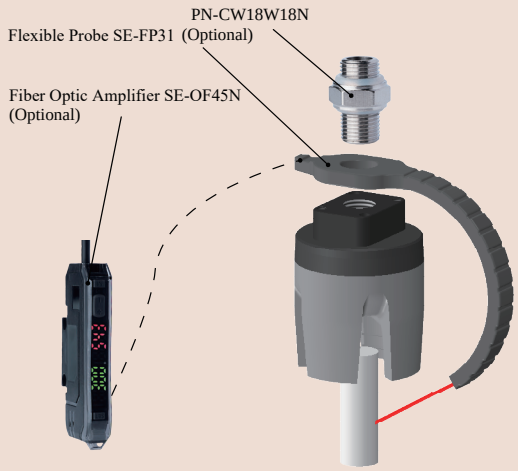

DAM Precise Positioning + Detection

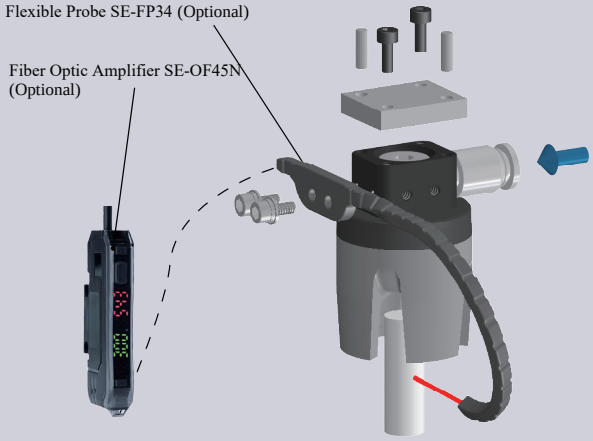

DAS Precise Positioning and Direct-through Installation

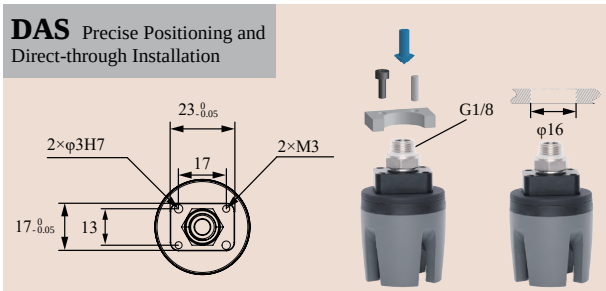

DAM
Precise Positioning and Multiple-through Installation

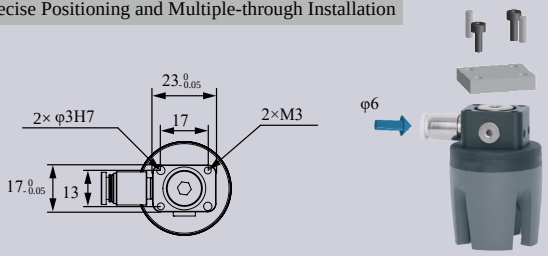

DAS
Matrix Installation

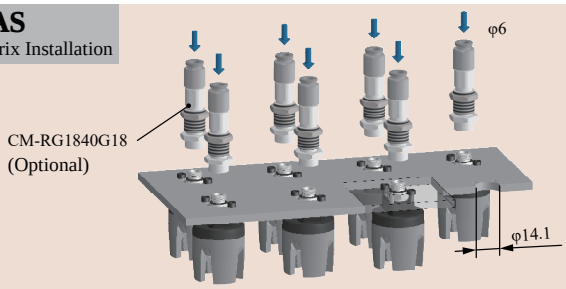

DAL
Robot Arm Flange Side-through Installation

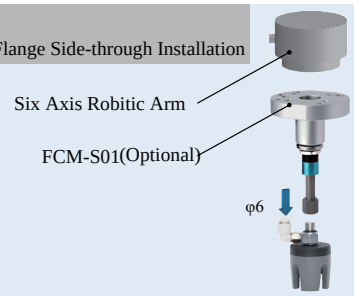

DAC Scara Scara Robot Arm Installation

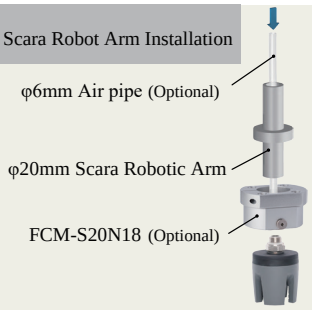

DAC
Rigid Connection Installation

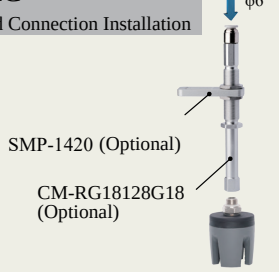

DAC
Buffer Installation

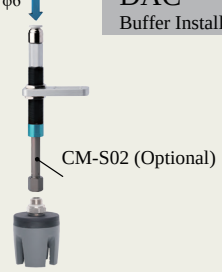

DAC-4G34[LH]/SN Direct-through Anti-static H Type	DAS-4G34[LH]/SN Direct-through Anti-static Precision Positioning H Type	DAL-4G34[LH]/SN Side-through Anti-static H Type	DAM-4G34[LH]/SN Multi-way Anti-static Precision Positioning H Type
DAC-4G34[LHAS]/SN Direct-through Anti-static Dust-free H Type	DAS-4G34[LHAS]/SN Direct-through Anti-static Dust-free Precision Positioning H Type	DAL-4G34[LHAS]/SN Side-through Anti-static Dust-free H Type	DAM-4G34[LHAS]/SN Side-through Anti-static Dust-free Precision Positioning H Type
			
Weight 25.5g	Weight 32.7g	Weight 40g	Weight 36.9g

- Fingertip open under pressure and clamped in a vacuum. Fingertip distance G can be adjusted by working pressure.It is suggested to be used with Rochu control unit.
- Soft beak material is divided into Normal Material [LH] and Dust-free Normal Material [LHAS]. When the workpiece is light, or very soft, easy to adhere to adsorp on the soft beak, Dust-free Normal Material [LHAS] is preferred.

Scan to watch videos

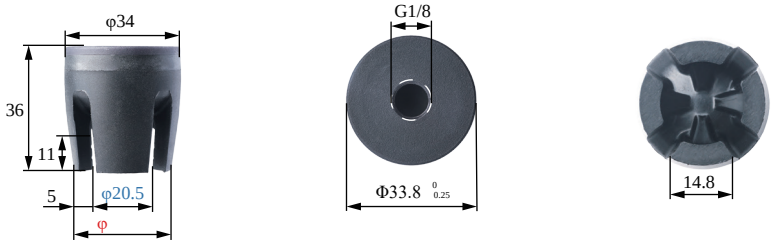

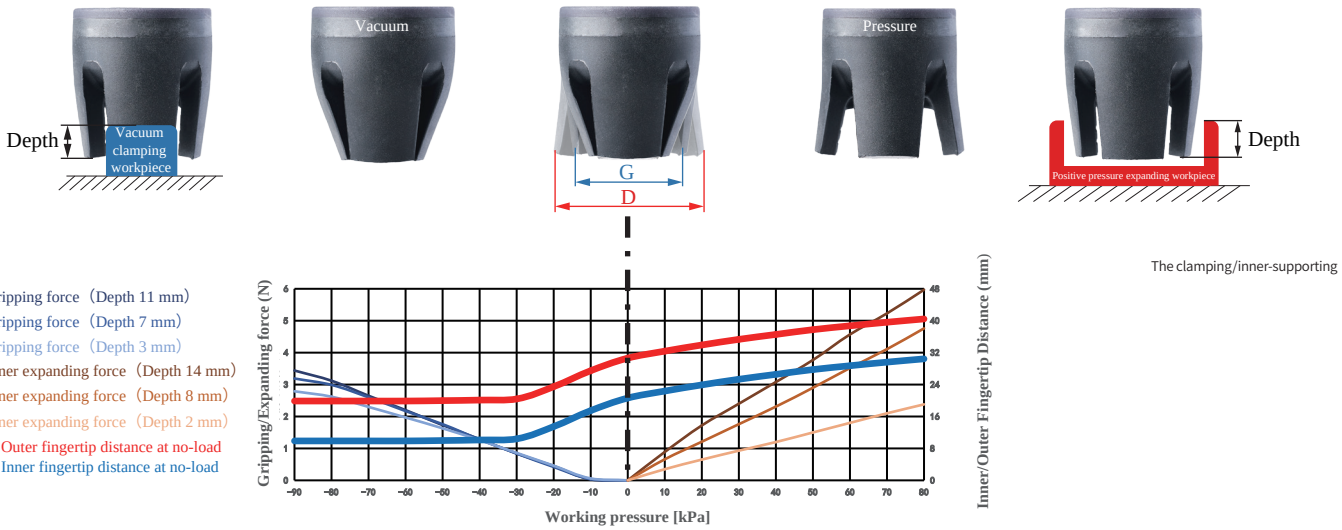

Gripping range	12-24mm	Gripping force	0-3.4N	Theoretical gripping load**	0-206g	Ideal gripping workpiece size*	18mm
Internal gripping range	30-35mm	Internal gripping force	0-6N	Theoretical internal gripping load**	0-358g	Ideal internal gripping workpiece size*	31mm
Joint size	G1/8	Life time***	1.5 million times	Contact Temperature	<220°C	Safe pressure***	<80kPa

DACModule
(Direct-through)



DASModule
(Precise Positioning Direct-through)



DALModule
(Side-through)



DAMModule
(Precise Positioning Multiple-through)

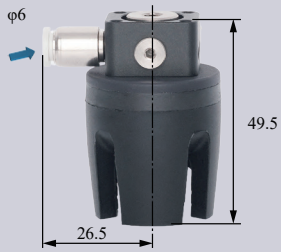

DAS Detection

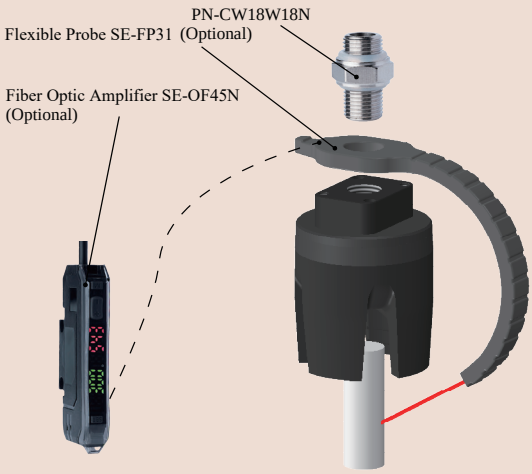

DAM Precise Positioning + Detection

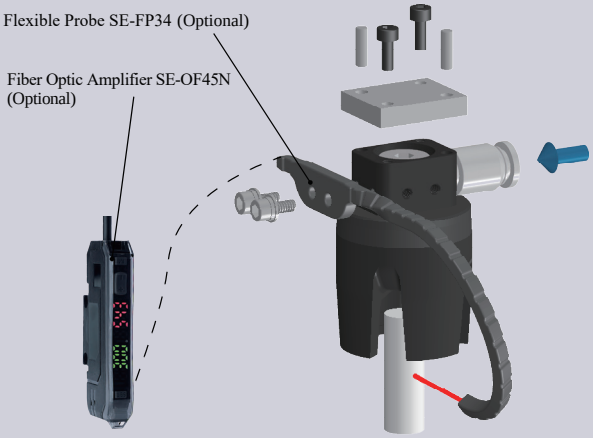

DAS Precise Positioning and Direct-through Installation

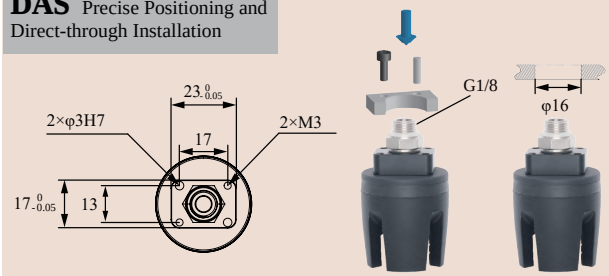

DAM
Precise Positioning and Multiple-through Installation

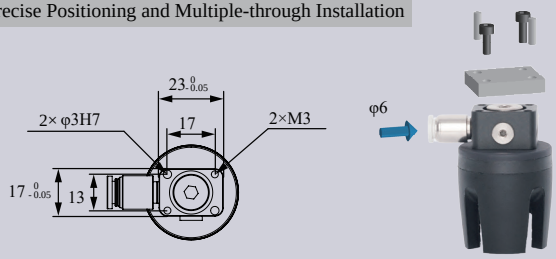

DAS
Matrix Installation

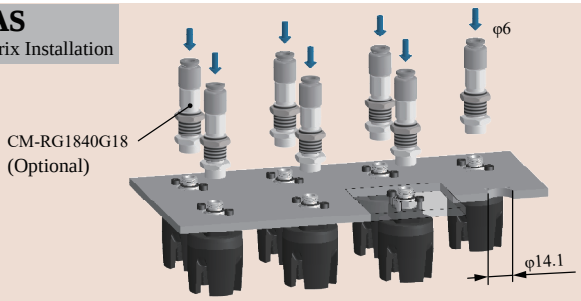

DAL
Robot Arm Flange Side-through Installation

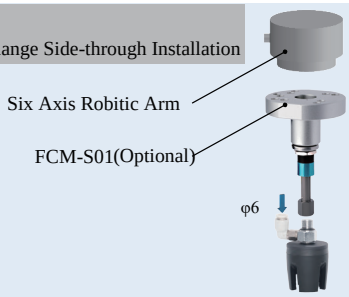

DAC Scara Scara Robot Arm Installation

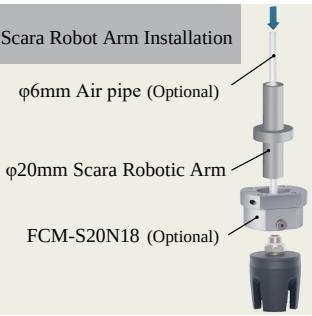

DAC
Rigid Connection Installation

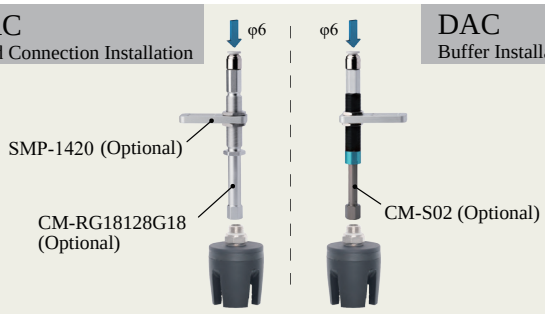

DAC
Buffer Installation

DAC-4G39[H]/SN Direct-through H Type	DAS-4G39[H]/SN Direct-through Precision Positioning H Type	DAL-4G39[H]/SN Side-through H Type	DAM-4G39[H]/SN Multi-way Precision Positioning H Type
DAC-4G39[HAS]/SN Direct-through Dust-free H Type	DAS-4G39[HAS]/SN Direct-through Precision Positioning H Type	DAL-4G39[HAS]/SN Side-through Dust-free H Type	DAM-4G39[HAS]/SN Multi-way Precision Positioning Dust-free H Type
			
Weight 29.2g	Weight 36.4g	Weight 43.7g	Weight 40.6g

- Fingertips open under pressure state and clamp in a vacuum. Inner fingertips distance G can be adjusted by working pressure.It is suggested to be used with Rochu control unit.
- When soft grippers contact workpieces,especially those with dust-prevention needs,or miniature,light-weight and easily-adsorbable ones,choose dust-free material [HAS] preferentially.
- Food-grade material, direct food contact approved.

Scan to watch videos







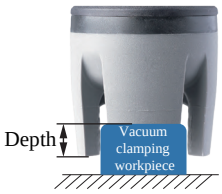









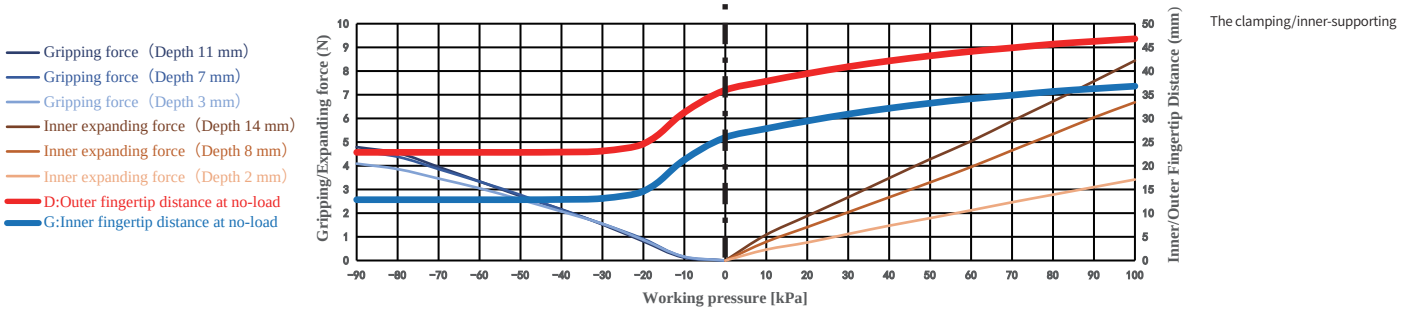

Gripping range	15-27mm	Gripping force	0-4.8N	Theoretical gripping load**	0-287g	Ideal gripping workpiece size*	22mm
Internal gripping range	35-40mm	Internal gripping force	0-8.4N	Theoretical internal gripping load**	0-5.6g	Ideal internal gripping workpiece size*	36mm
Joint size	G1/8	Life time***	1.5 million times	Contact Temperature	<220℃	Safe pressure***	<100kPa

DACModule
(Direct-through)



DASModule
(Precise Positioning Direct-through)

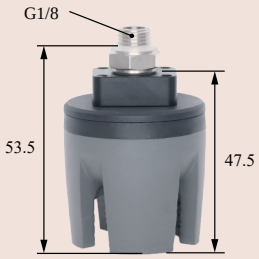

DALModule
(Side-through)

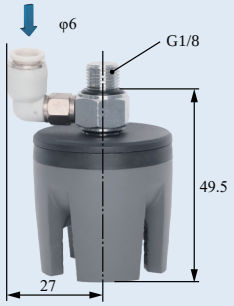

DAMModule
(Precise Positioning Multiple-through)

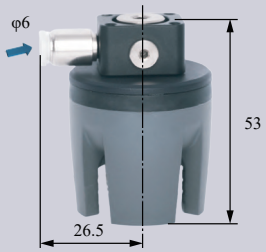

DAS Detection

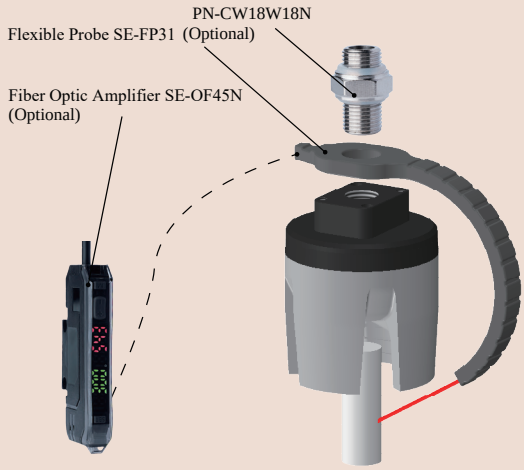

DAM Precise Positioning + Detection

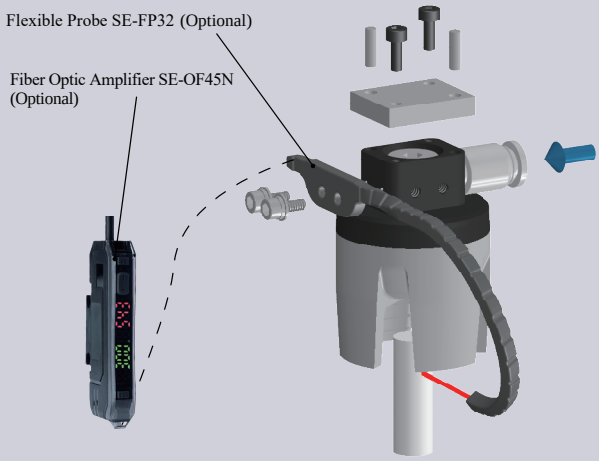

DAS Precise Positioning and Direct-through Installation

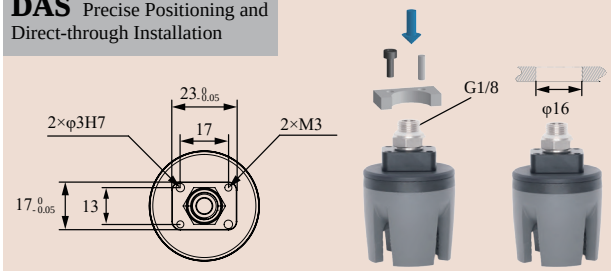

DAM
Precise Positioning and Multiple-through Installation

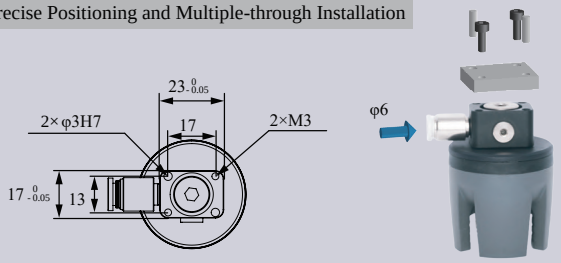

DAS
Matrix Installation

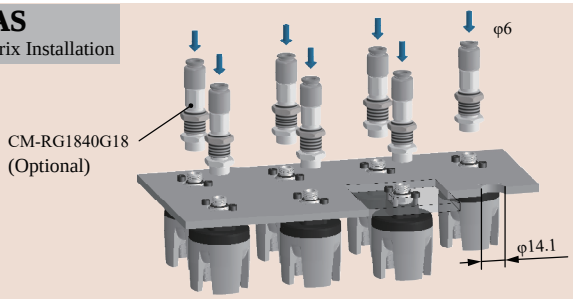

DAL
Robot Arm Flange Side-through Installation

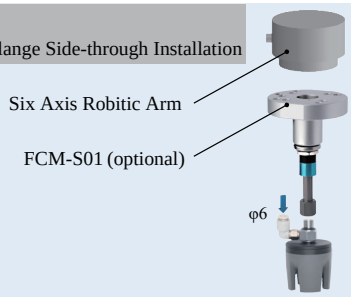

DAC Scara Scara Robot Arm Installation

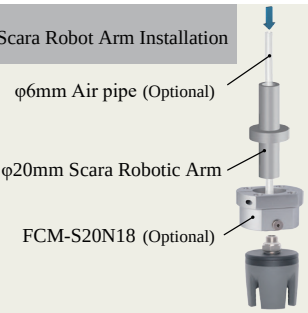

DAC
Rigid Connection Installation

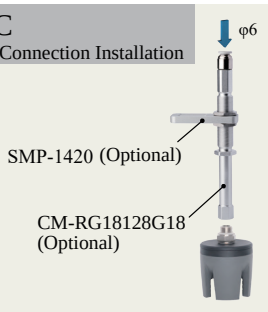

DAC
Buffer Installation

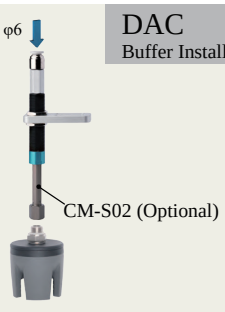

	DAC-4B40[P]/S Direct-through P Type		DAL-4B40[P]/S Side-through P Type		
	DAC-4B40[PAS]/S Direct-through Dust-free P Type		DAL-4B40[PAS]/S Side-through Dust-free P Type		
	Weight	59.2g	Weight	73.7g	

- Fingertip open under pressure and clamped in a vacuum. Fingertip distance G can be adjusted by working pressure.It is suggested to be used with Rochu control unit.
- Soft beak material is divided into Normal Material [P] and Dust-free Normal Material [PAS]. When the workpiece is light, or very soft, easy to adhere to adsorp on the soft beak, Dust-free Normal Material [PAS] is preferred.
- Food-grade material, direct food contact approved.

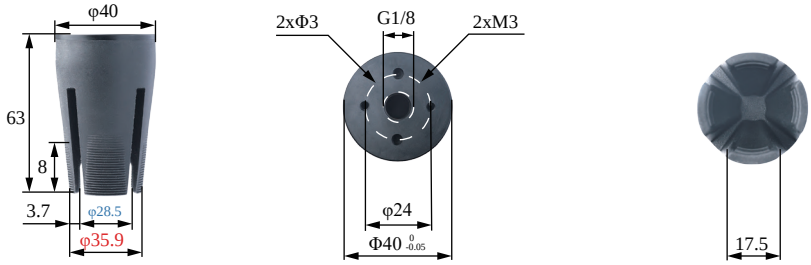

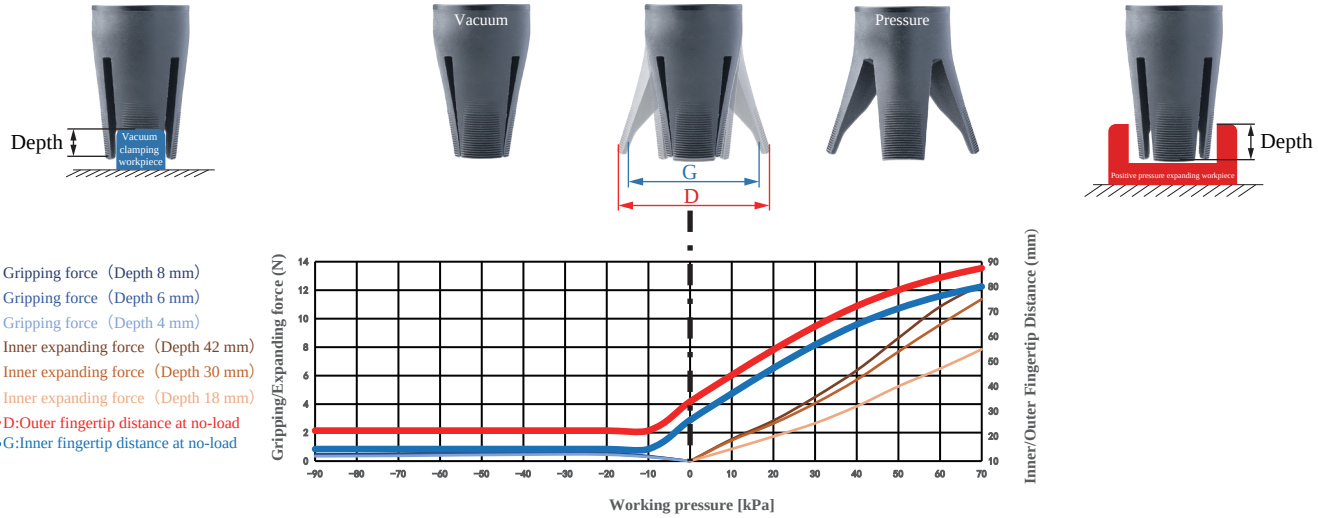

Gripping range	19-33mm	Gripping force	0-0.5N	Theoretical gripping load**	0-28g	Ideal gripping workpiece size*	28mm
Internal gripping range	34-60mm	Internal gripping force	0-12.4N	Theoretical internal gripping load**	0-745g	Ideal internal gripping workpiece size*	36mm
Joint size	G1/8	Life time***	1.5 million times	Contact Temperature	<220°C	Safe pressure***	<70kPa

DAC Straight Fitting Installation

Scan to watch videos



DAL Side Fitting Installation



Scara Robotic Arm Installation

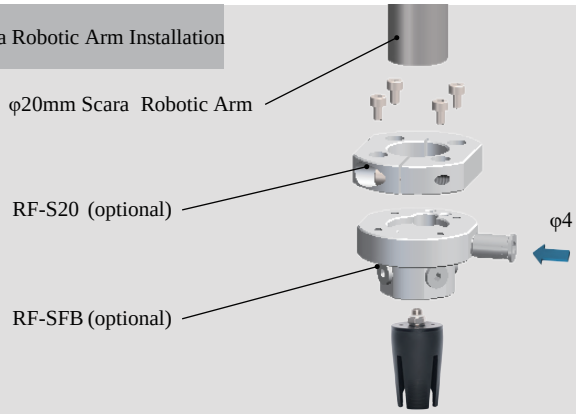

Robotic Arm Flange Side Fitting Installation

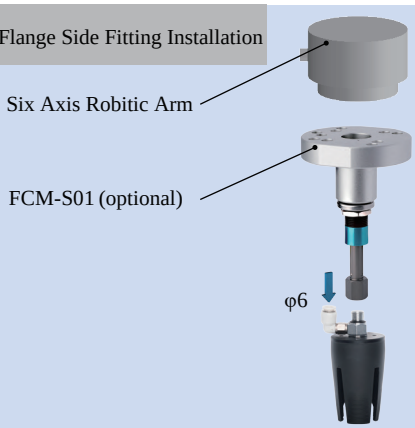

Rigid Connection Installation

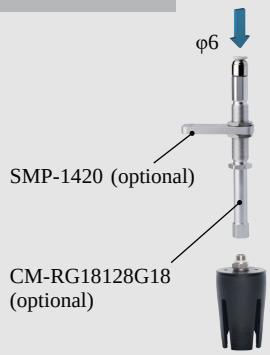

Buffer Installation

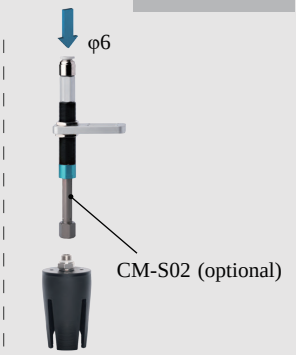

Matrix Installation

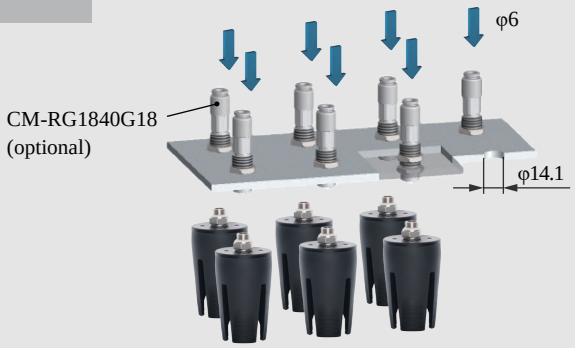

Precise Positioning Installation

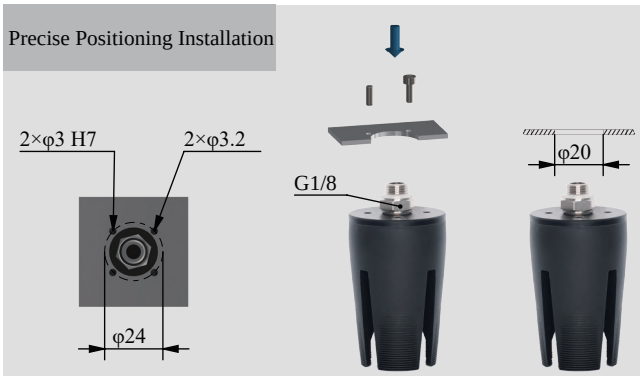

Installation of Optical Fiber Sensors



	DAC-4B40[H]/S Direct-through H Type		DAL-4B40[H]/S Side-through H Type	
	DAC-4B40[HAS]/S Direct-through Dust-free H Type		DAL-4B40[HAS]/S Side-through Dust-free H Type	
	Weight	57.2g	Weight	71.7g

- Fingertips open under pressure state and clamp in a vacuum. Inner fingertips distance G can be adjusted by working pressure.It is suggested to be used with Rochu control unit.
- When soft grippers contact workpieces,especially those with dust-prevention needs,or miniature,lightweight and easily-adsorbable ones,choose dust-free material [HAS] preferentially.
- Food-grade material, direct food contact approved.

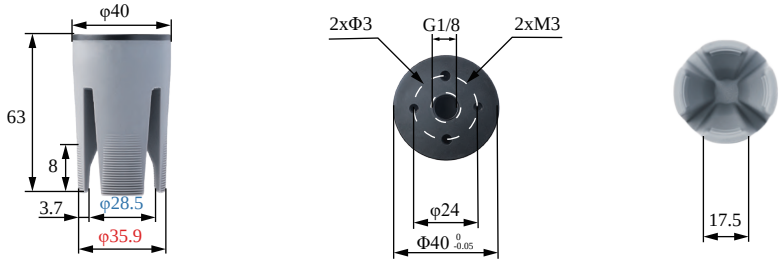

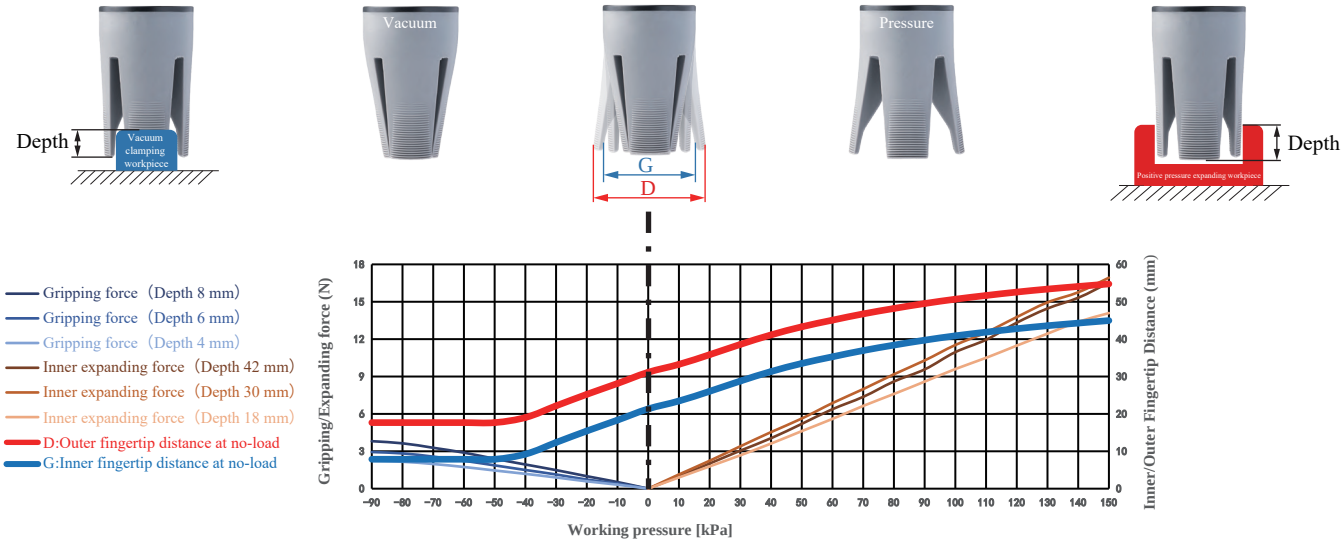

Gripping range	19-33mm	Gripping force	0-1.9N	Theoretical gripping load**	0-115g	Ideal gripping workpiece size*	28mm
Internal gripping range	36-66mm	Internal gripping force	0-19.2N	Theoretical internal gripping load**	0-1152g	Ideal internal gripping workpiece size*	36mm
Joint size	G1/8	Life time***	1.5 million times	Contact Temperature	<220°C	Safe pressure***	<160kPa

DAC Straight Fitting Installation

Scan to watch videos



DAL Side Fitting Installation

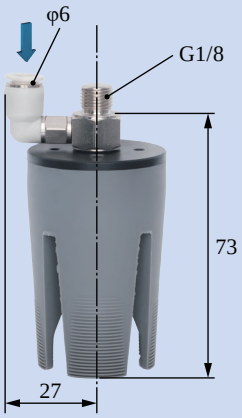

Scara Robotic Arm Installation

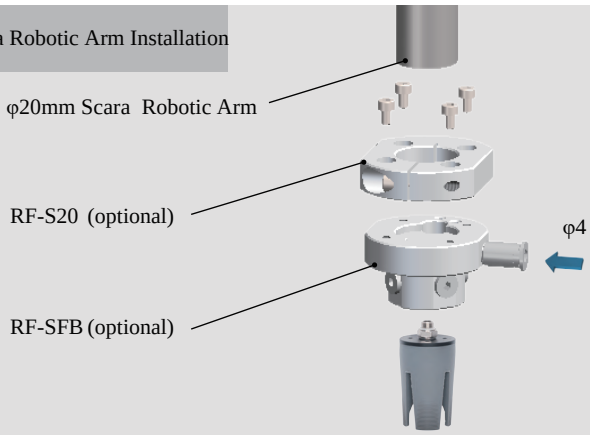

Robotic Arm Flange Side Fitting Installation

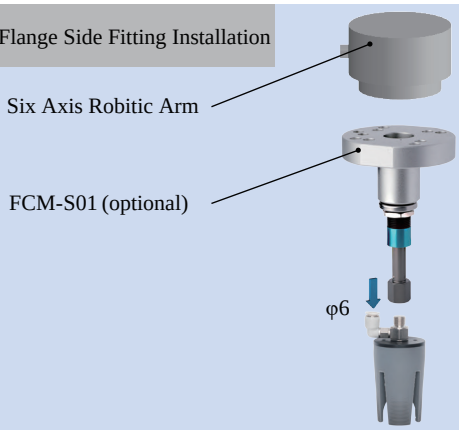

Rigid Connection Installation

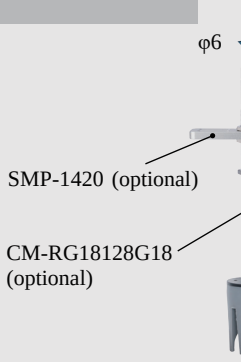

Buffer Installation

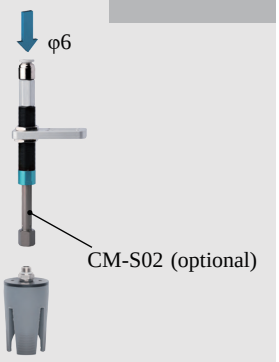

Matrix Installation

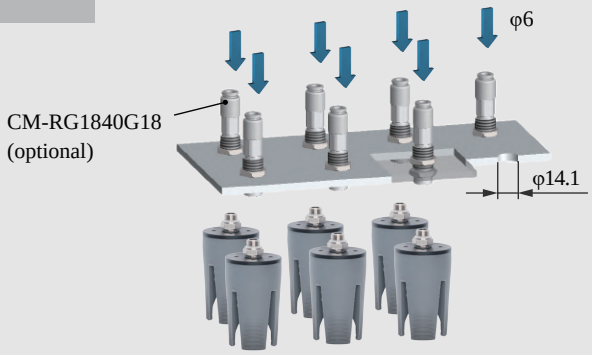

Precise Positioning Installation

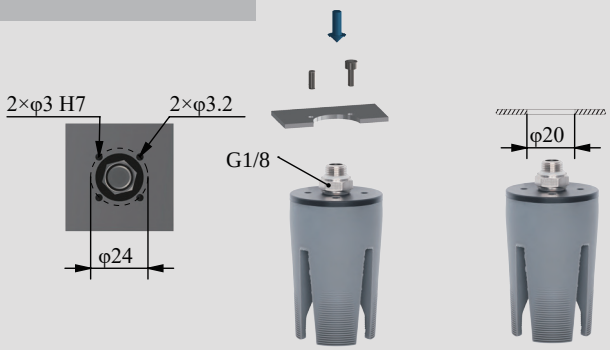

Installation of Optical Fiber Sensors

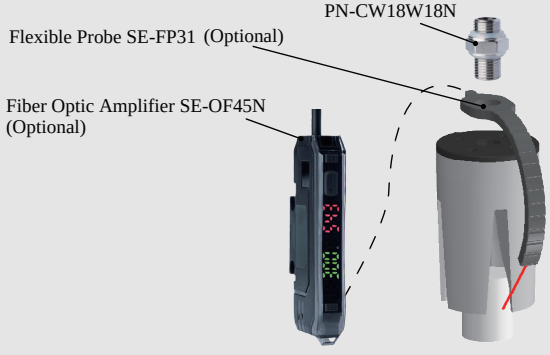



DAC-4G40[H]/S Direct-through H Type		DAL-4G40[H]/S Side-through H Type	
DAC-4G40[HAS]/S Direct-through Dust-free H Type		DAL-4G40[HAS]/S Side-through Dust-free H Type	
Weight	61.7g	Weight	76.2g



- Fingertips open under pressure state and clamp in a vacuum. Inner fingertips distance G can be adjusted by working pressure.It is suggested to be used with Rochu control unit.
- When soft grippers contact workpieces,especially those with dust-prevention needs,or miniature,lightweight and easily-adsorbable ones,choose dust-free material [HAS] preferentially.
- Food-grade material, direct food contact approved.

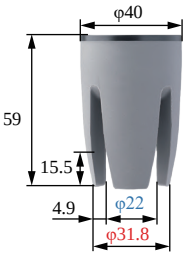

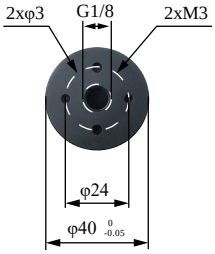



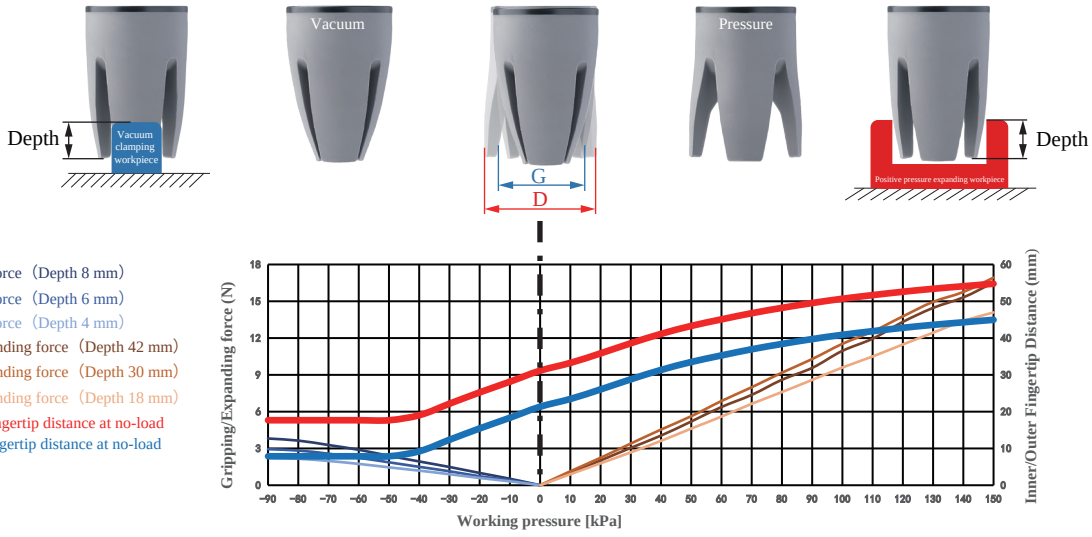

Gripping range	9-30mm	Gripping force	0-3.8N	Theoretical gripping load**	0-229g	Ideal gripping workpiece size*	24mm
Internal gripping range	35-48mm	Internal gripping force	0-16.9N	Theoretical internal gripping load**	0-1016g	Ideal internal gripping workpiece size*	36mm
Joint size	G1/8	Life time***	1.5 million times	Contact Temperature	<220°C	Safe pressure***	<150kPa

DAC Straight Fitting Installation

Scan to watch videos



DAL Side Fitting Installation

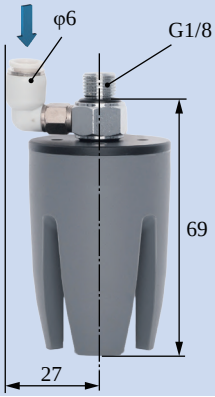

Scara Robotic Arm Installation

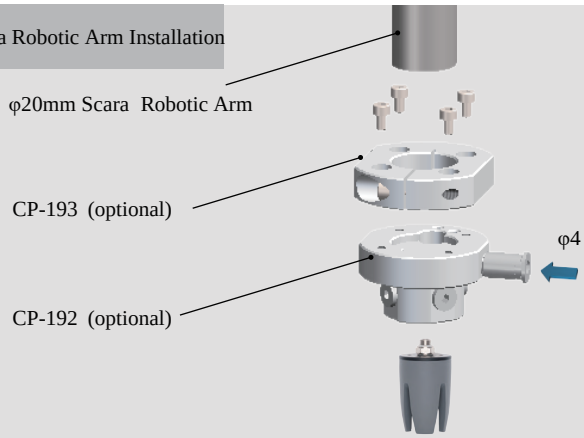

Robotic Arm Flange Side Fitting Installation

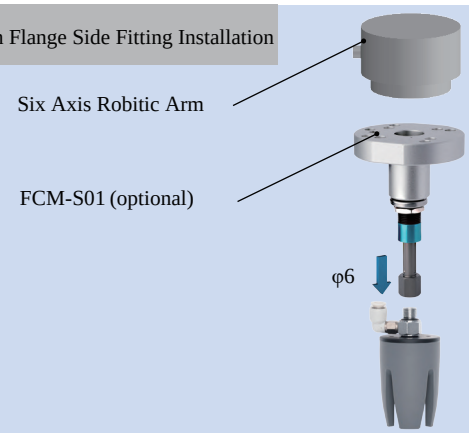

Rigid Connection Installation

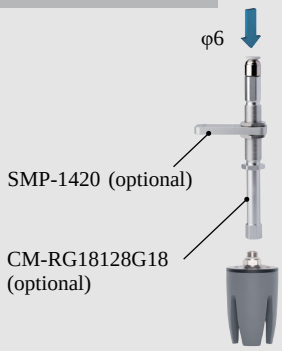

Buffer Installation

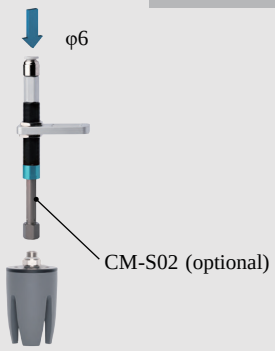

Matrix Installation



Precise Positioning Installation

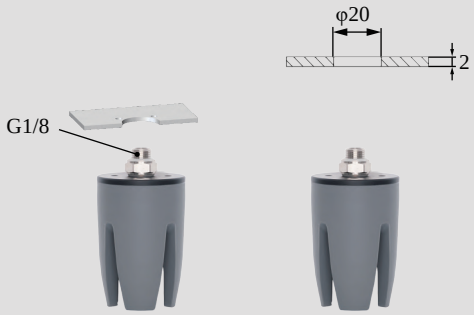

Installation of Optical Fiber Sensors

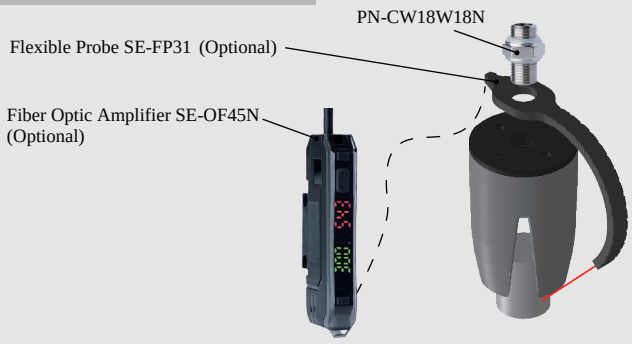

	DAC-4G44[H]/S Direct-through H Type		DAL-4G44[H]/S Side-through H Type		
	DAC-4G44[HAS]/S Direct-through Dust-free H Type		DAL-4G44[HAS]/S Side-through Dust-free H Type		
	Weight	59.8g	Weight	73.7g	

- Fingertips open under pressure state and clamp in a vacuum. Inner fingertips distance G can be adjusted by working pressure.It is suggested to be used with Rochu control unit.
- When soft grippers contact workpieces,especially those with dust-prevention needs,or miniature,lightweight and easily-adsorbable ones,choose dust-free material [HAS] preferentially.
- Food-grade material, direct food contact approved.

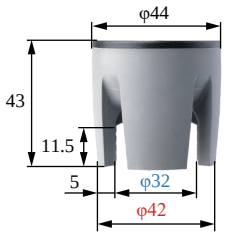

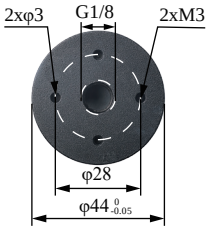



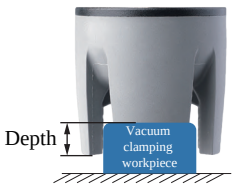



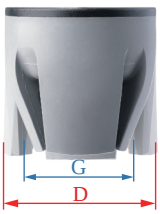





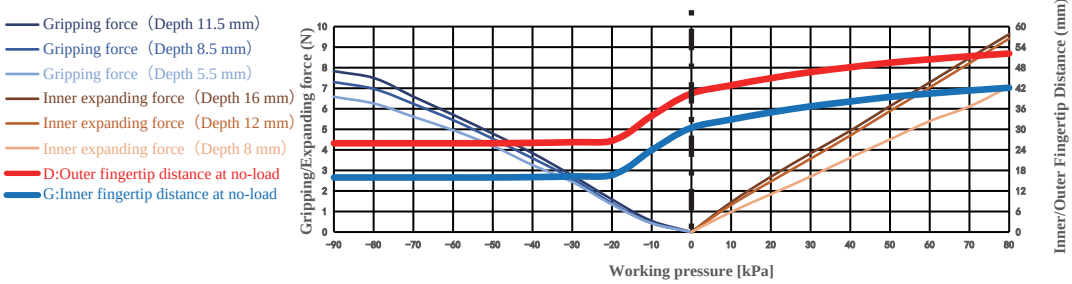

Gripping range	18-31.5mm	Gripping force	0-7.8N	Theoretical gripping load**	0-470g	Ideal gripping workpiece size*	30mm
Internal gripping range	40-47mm	Internal gripping force	0-9.6N	Theoretical internal gripping load**	0-578g	Ideal internal gripping workpiece size*	43mm
Joint size	G1/8	Life time***	1.5 million times	Contact Temperature	<220℃	Safe pressure***	<80kPa

DAC Straight Fitting Installation

Scan to watch videos



DAL Side Fitting Installation

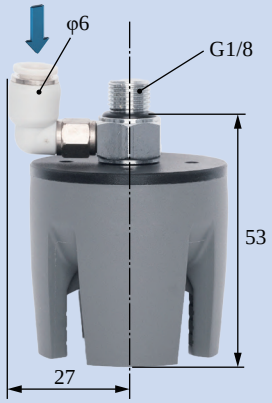

Scara Robotic Arm Installation

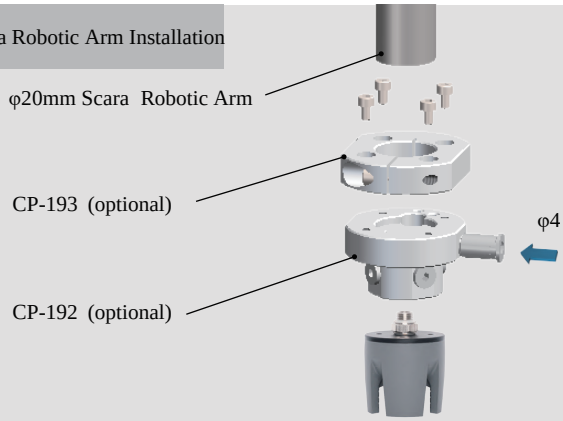

Robotic Arm Flange Side Fitting Installation

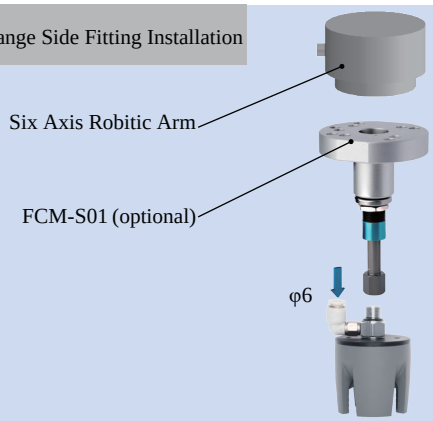

Rigid Connection Installation

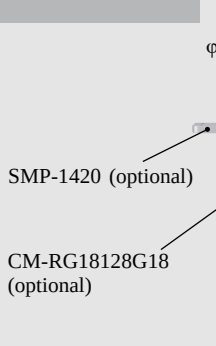

Buffer Installation

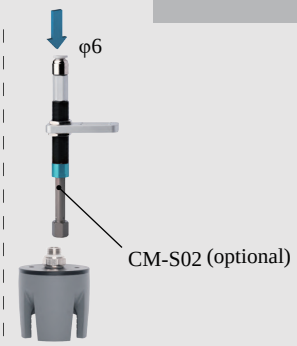

Matrix Installation

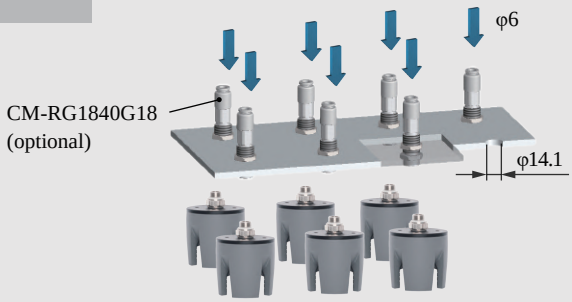

Precise Positioning Installation



Installation of Optical Fiber Sensors



	DAC-4B50[P]/S Direct-through H Type		DAL-4B50[P]/S Side-through H Type		
	DAC-4B50[PAS]/S Direct-through Dust-free H Type		DAL-4B50[PAS]/S Side-through Dust-free H Type		
	Weight	92.1g	Weight	106.6g	

- Fingertips open under pressure state and clamp in a vacuum. Inner fingertips distance G and outer fingertips distance D can be adjusted by working pressure.It is suggested to be used with Rochu control unit.
- Soft beak material is divided into Normal Material [P] and Dust-free Normal Material [PAS]. When the workpiece is light, or very soft, easy to adhere to adsorp on the soft beak, Dust-free Normal Material [PAS] is preferred.
- Food-grade material, direct food contact approved.

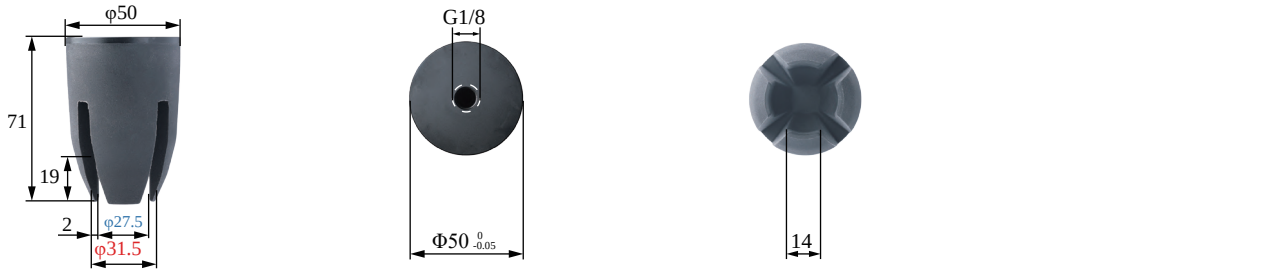

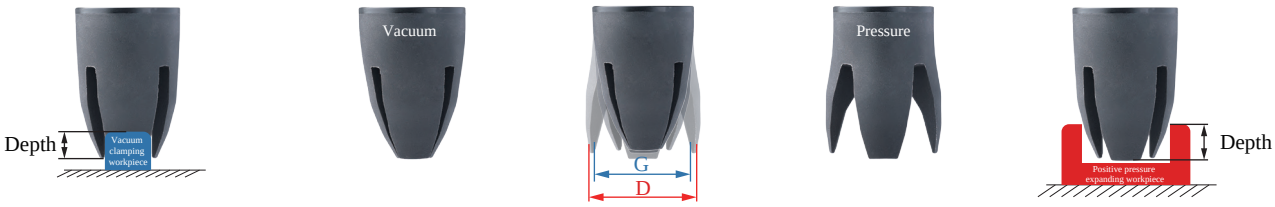

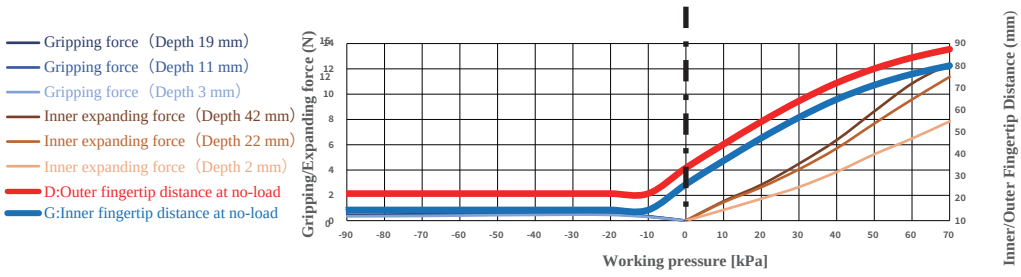

Gripping range	15-40mm	Gripping force	0-2.1N	Theoretical gripping load**	0-125g	Ideal gripping workpiece size*	22mm
Internal gripping range	35-70mm	Internal gripping force	0-13.4N	Theoretical internal gripping load**	0-801g	Ideal internal gripping workpiece size*	52mm
Joint size	G1/8	Life time***	1.5 million times	Contact Temperature	<220℃	Safe pressure***	<80kPa

DAC Straight Fitting Installation

Scan to watch videos



DAL Side Fitting Installation

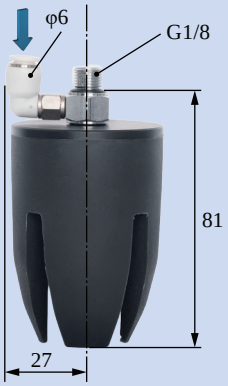

Scara Robotic Arm Installation

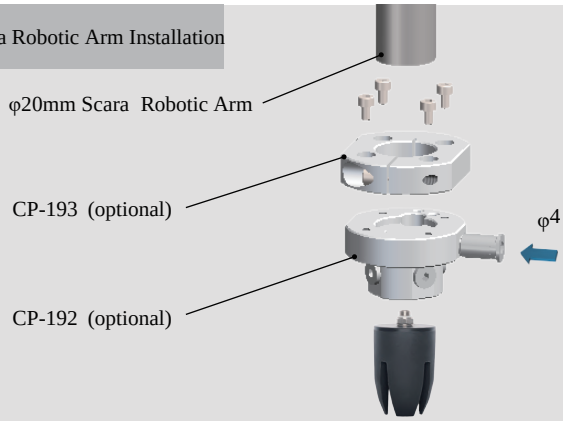

Robotic Arm Flange Side Fitting Installation

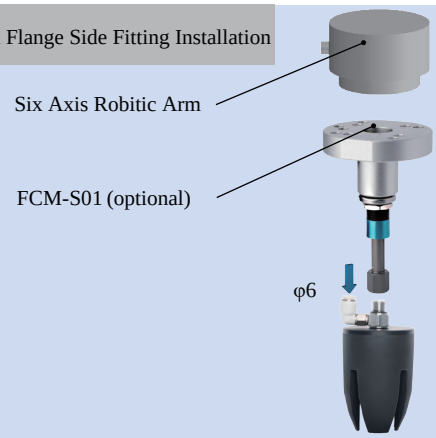

Rigid Connection Installation

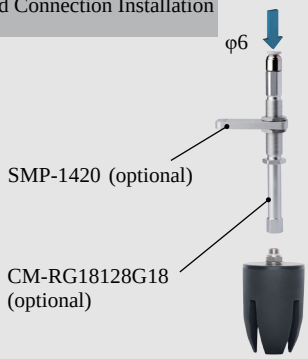

Buffer Installation

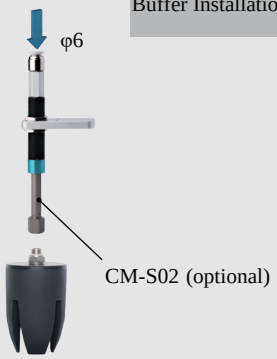

Matrix Installation

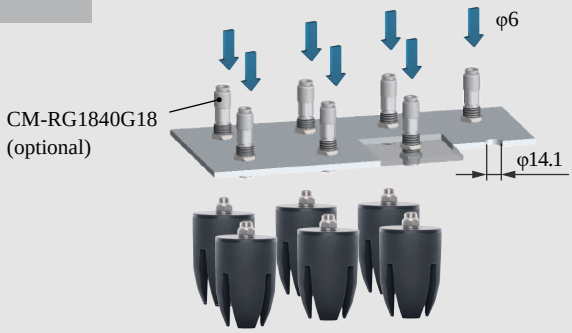

Precise Positioning Installation

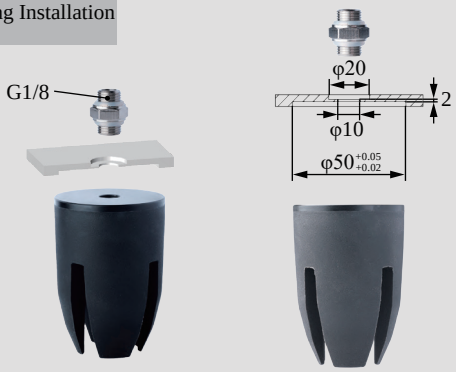

Installation of Optical Fiber Sensors



DAC-4G51[H]/SN Direct-through H Type	DAS-4G51[H]/SN Direct-through Precision Positioning H Type	DAL-4G51[H]/SN Side-through H Type	DAM-4G51[H]/SN Multi-way Precision Positioning H Type
DAC-4G51[HAS]/SN Direct-through Dust-free H Type	DAS-4G51[HAS]/SN Direct-through Precision Positioning H Type	DAL-4G51[HAS]/SN Side-through Dust-free H Type	DAM-4G51[HAS]/SN Multi-way Precision Positioning Dust-free H Type
			
Weight 50g	Weight 57.2g	Weight 64.5g	Weight 61.4g

- Fingertips open under pressure state and clamp in a vacuum. Inner fingertips distance G can be adjusted by working pressure.It is suggested to be used with Rochu control unit.
- When soft grippers contact workpieces,especially those with dust-prevention needs,or miniature,lightweight and easily-adsorbable ones,choose dust-free material [HAS] preferentially.
- Food-grade material, direct food contact approved.

Scan to watch videos





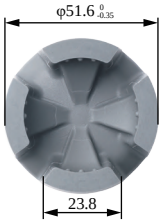

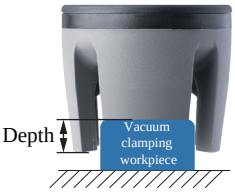



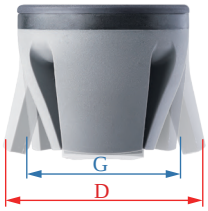





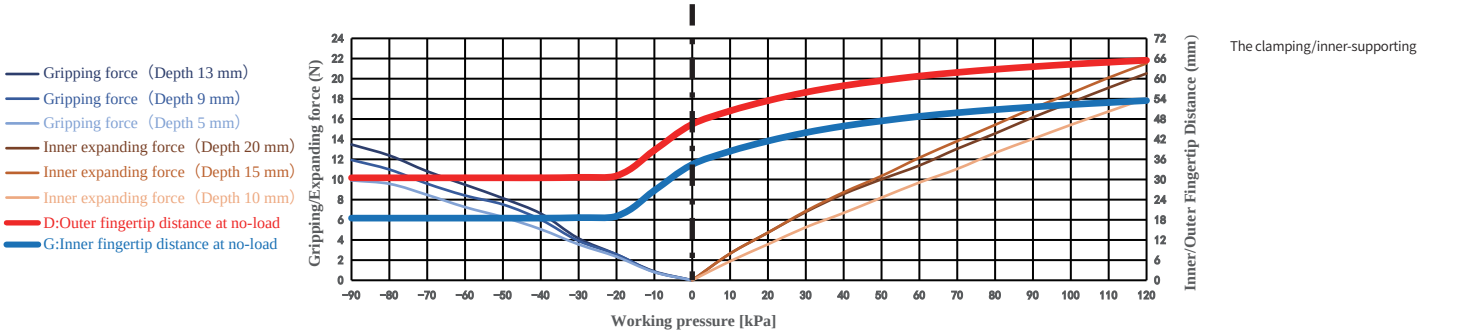

Gripping range	20-35mm	Gripping force	0-13.5N	Theoretical gripping load**	0-808g	Ideal gripping workpiece size*	30mm
Internal gripping range	45-52mm	Internal gripping force	0-21.5N	Theoretical internal gripping load**	0-1291g	Ideal internal gripping workpiece size*	46mm
Joint size	G1/8	Life time***	1.5 million times	Contact Temperature	<220℃	Safe pressure***	<120kPa

DACModule
(Direct-through)



DASModule
(Precise Positioning Direct-through)

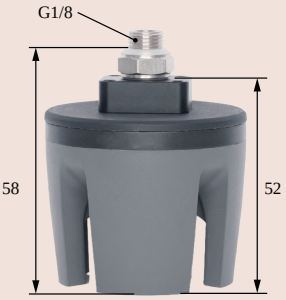

DALModule
(Side-through)



DAMModule
(Precise Positioning Multiple-through)

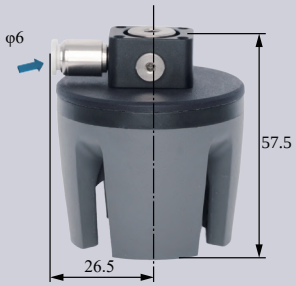

DAS Detection

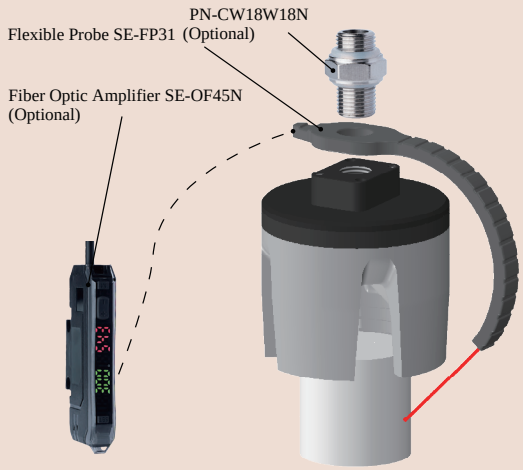

DAM Precise Positioning + Detection

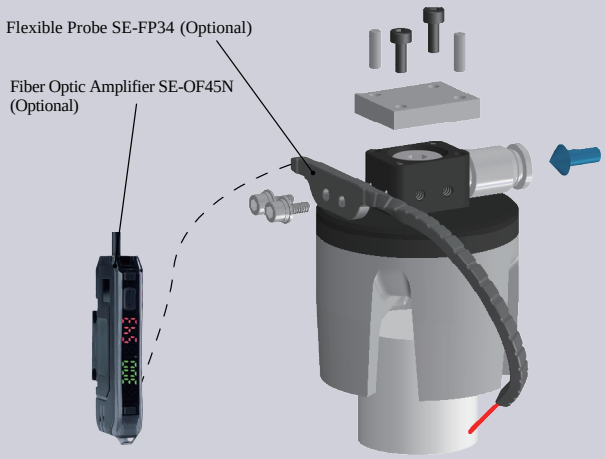

DAS Precise Positioning and Direct-through Installation

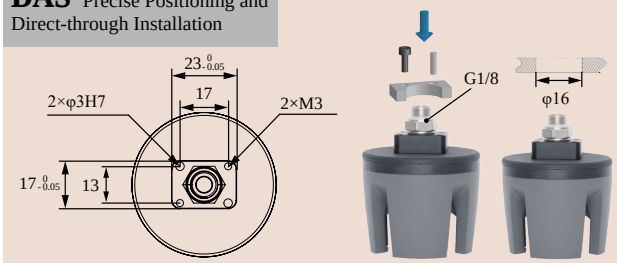

DAM Precise Positioning and Multiple-through Installation

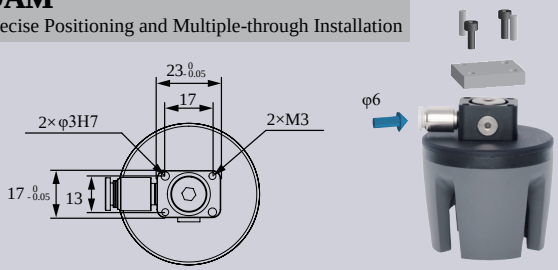

DAS Matrix Installation

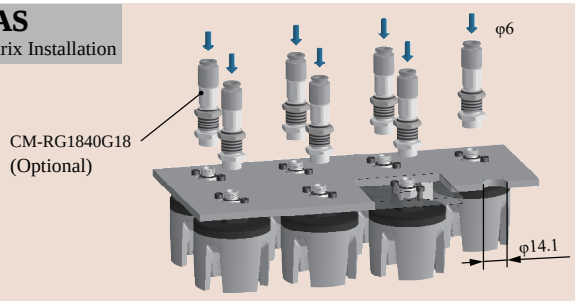

DAL Robot Arm Flange Side-through Installation

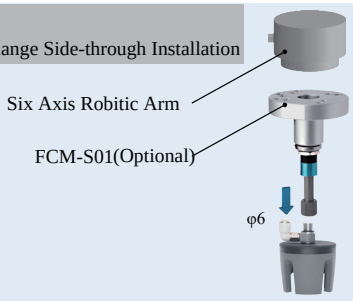

DAC Scara Scara Robot Arm Installation

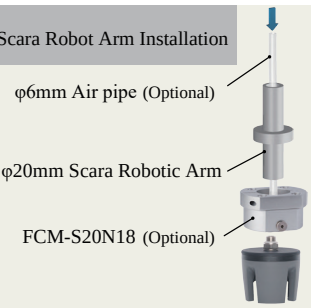

DAC Rigid Connection Installation

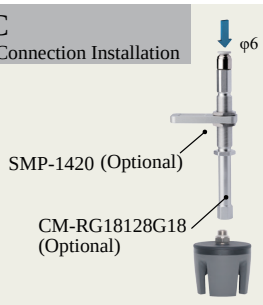

DAC Buffer Installation

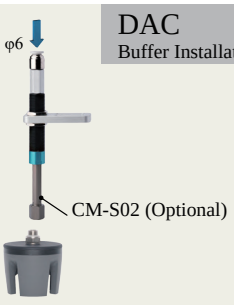

DAC-4G58[H]/SN Direct-through H Type	DAS-4G58[H]/SN Direct-through Precision Positioning H Type	DAL-4G58[H]/SN Side-through H Type	DAM-4G58[H]/SN Multi-way Precision Positioning H Type
DAC-4G58[HAS]/SN Direct-through Dust-free H Type	DAS-4G58[HAS]/SN Direct-through Precision Positioning H Type	DAL-4G58[HAS]/SN Side-through Dust-free H Type	DAM-4G58[HAS]/SN Multi-way Precision Positioning Dust-free H Type
			
Weight 60.4g	Weight 67.6g	Weight 74.4g	Weight 71.8g

- Fingertips open under pressure state and clamp in a vacuum. Inner fingertips distance G can be adjusted by working pressure.It is suggested to be used with Rochu control unit.
- When soft grippers contact workpieces,especially those with dust-prevention needs,or miniature,lightweight and easily-adsorbable ones,choose dust-free material [HAS] preferentially.
- Food-grade material, direct food contact approved.

Scan to watch videos

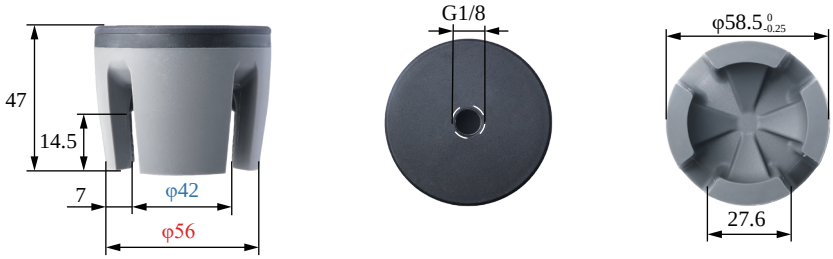

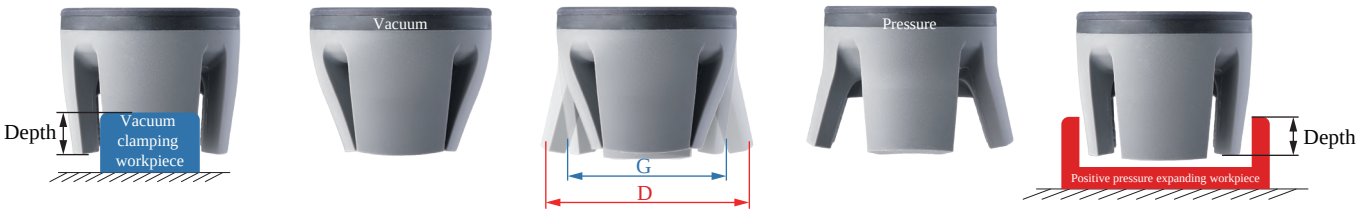

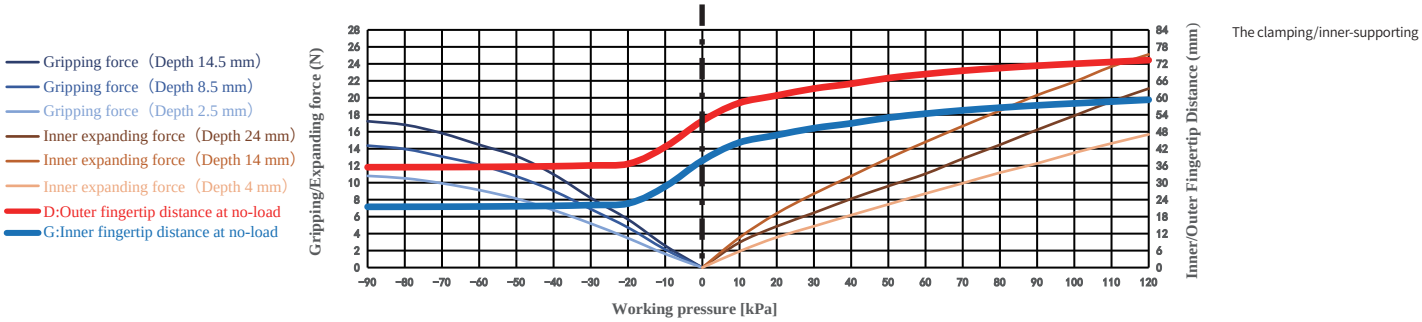

Gripping range	24.5-50mm	Gripping force	0-17.2N	Theoretical gripping load**	0-1034g	Ideal gripping workpiece size*	40mm
Internal gripping range	55-62mm	Internal gripping force	0-25.1N	Theoretical internal gripping load**	0-1507g	Ideal internal gripping workpiece size*	58mm
Joint size	G1/8	Life time***	1.5 million times	Contact Temperature	<220°C	Safe pressure***	<120kPa

DACModule
(Direct-through)



DASModule
(Precise Positioning Direct-through)



DALModule
(Side-through)



DAMModule
(Precise Positioning Multiple-through)



DAS Detection

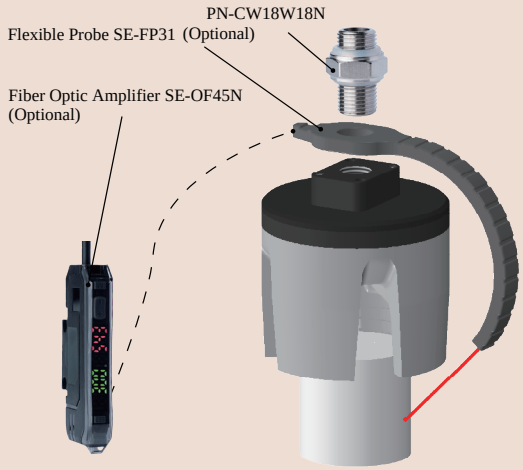

DAM Precise Positioning + Detection

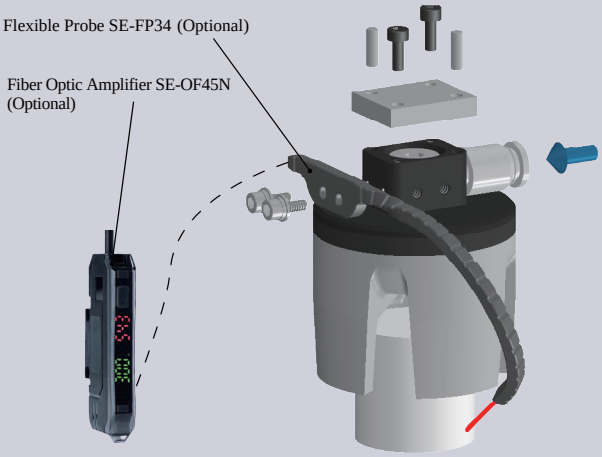

DAS Precise Positioning and Direct-through Installation

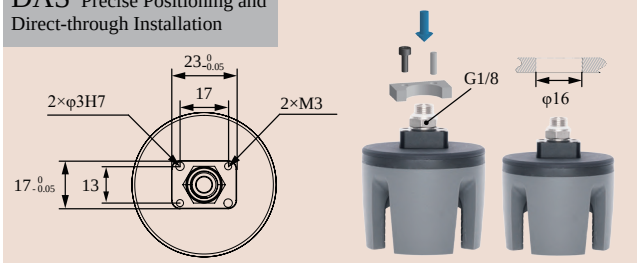

DAM Precise Positioning and Multiple-through Installation

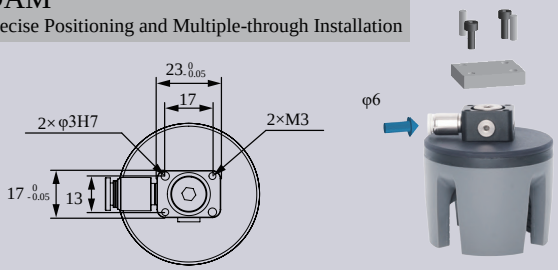

DAS Matrix Installation

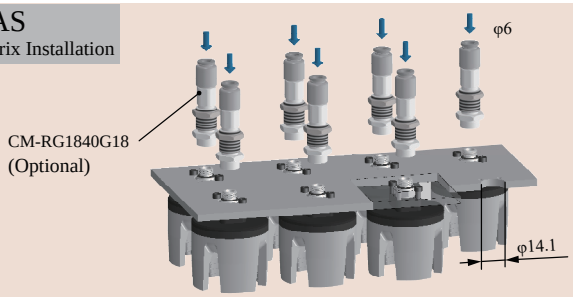

DAL Robot Arm Flange Side-through Installation

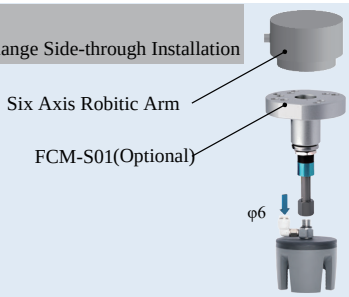

DAC Scara Scara Robot Arm Installation

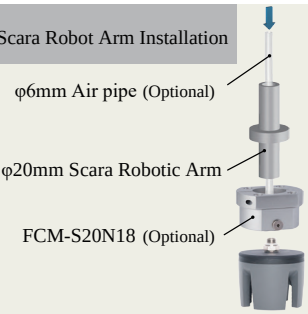

DAC Rigid Connection Installation

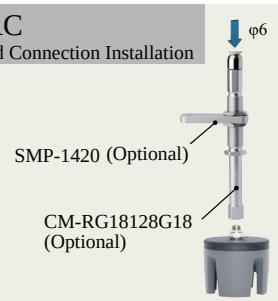

DAC Buffer Installation

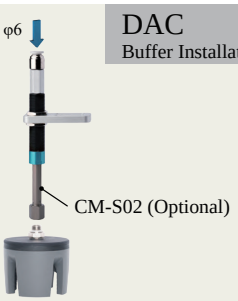



DAC-4G64[H]/S Direct-through H Type		DAL-4G64[H]/S Side-through H Type	
DAC-4G64[HAS]/S Direct-through Dust-free H Type		DAL-4G64[HAS]/S Side-through Dust-free H Type	
Weight	114.7g	Weight	129.2g



- Fingertips open under pressure state and clamp in a vacuum. Inner fingertips distance G can be adjusted by working pressure.It is suggested to be used with Rochu control unit.
- When soft grippers contact workpieces,especially those with dust-prevention needs,or miniature,lightweight and easily-adsorbable ones,choose dust-free material [HAS] preferentially.
- Food-grade material, direct food contact approved.

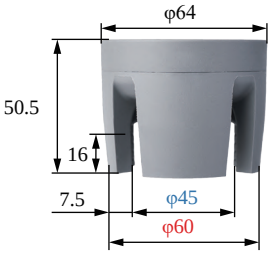



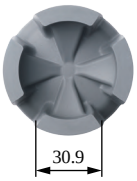

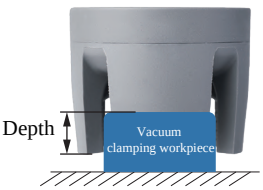



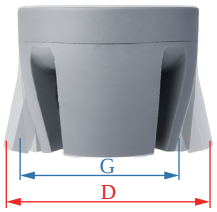



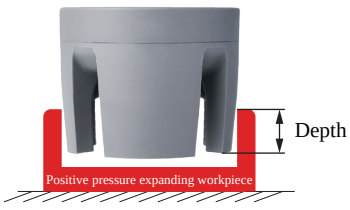

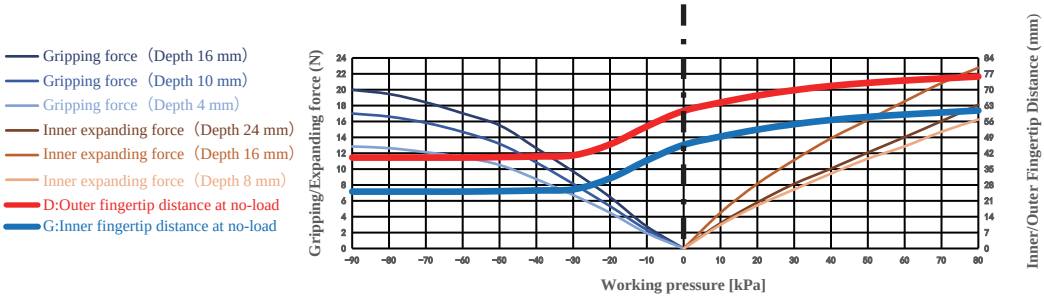

Gripping range	30-50mm	Gripping force	0-20N	Theoretical gripping load**	0-1199g	Ideal gripping workpiece size*	45mm
Internal gripping range	—	Internal gripping force	0-22.8N	Theoretical internal gripping load**	0-1366g	Ideal internal gripping workpiece size*	—
Joint size	G1/8	Life time***	1.5 million times	Contact Temperature	<220℃	Safe pressure***	<80kPa

DAC Straight Fitting Installation

Scan to watch videos



DAL Side Fitting Installation



Scara Robotic Arm Installation

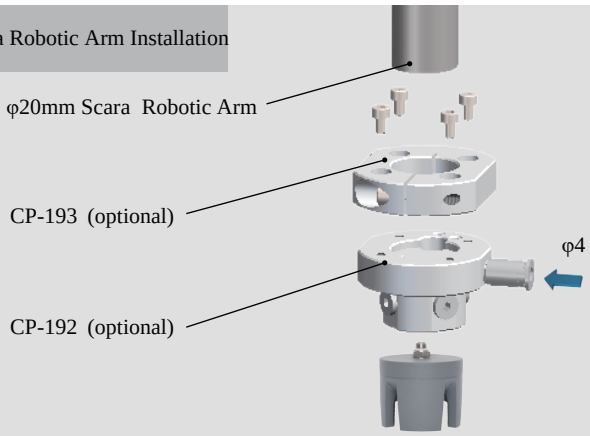

Robotic Arm Flange Side Fitting Installation

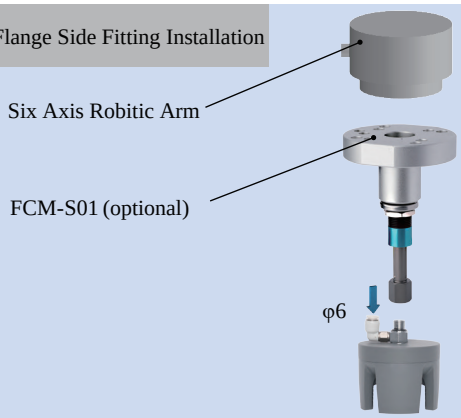

Rigid Connection Installation

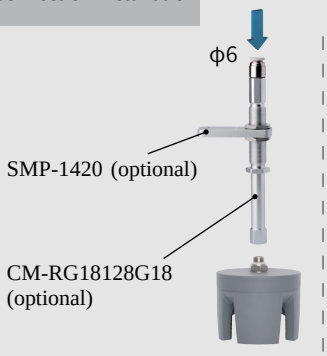

Buffer Installation

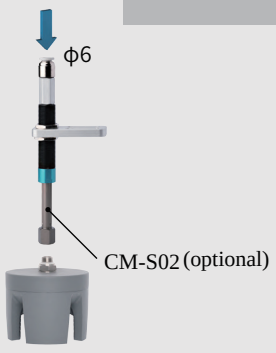

Matrix Installation

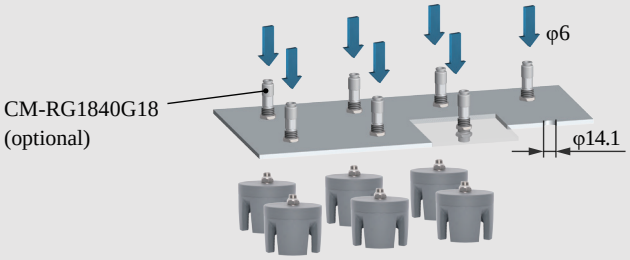

Precise Positioning Installation

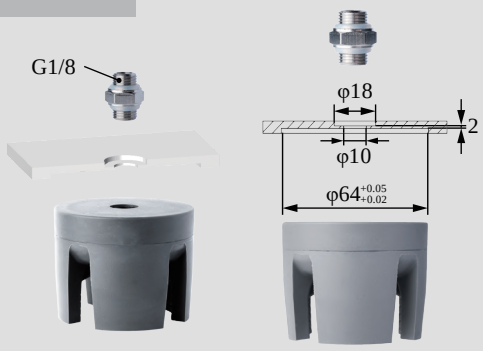

Installation of Optical Fiber Sensors

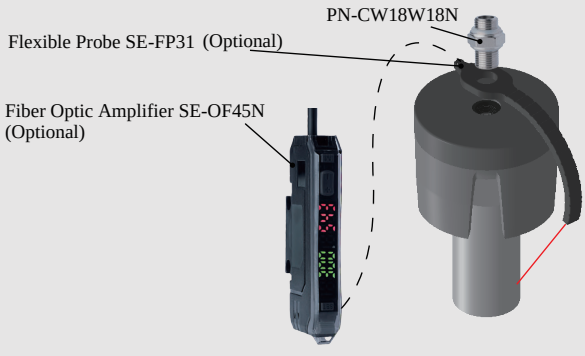

	DAC-4BG64[P]/S Direct-through P Type		DAL-4BG64[P]/S Side-through P Type		
	DAC-4BG64[PAS]/S Direct-through Dust-free P Type		DAL-4BG64[PAS]/S Side-through Dust-free P Type		
	Weight	114.7g	Weight	129.2g	

- Fingertips open under pressure state and clamp in a vacuum. Inner fingertips distance G can be adjusted by working pressure.It is suggested to be used with Rochu control unit.
- When soft grippers contact workpieces,especially those with dust-prevention needs,or miniature,lightweight and easily-adsorbable ones,choose dust-free material [PAS] preferentially.
- Food-grade material, direct food contact approved.

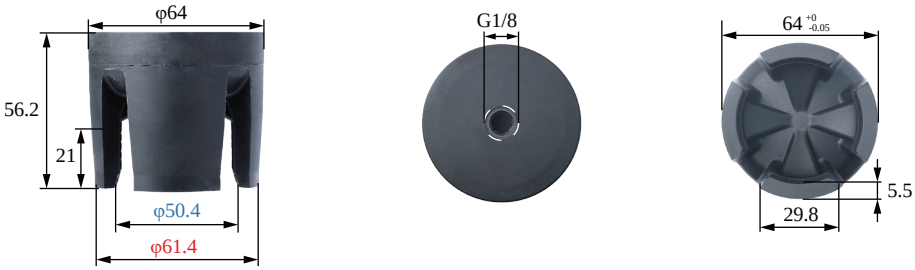

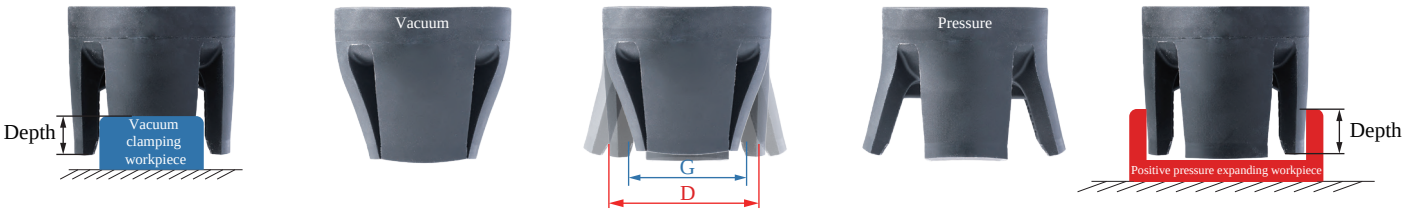

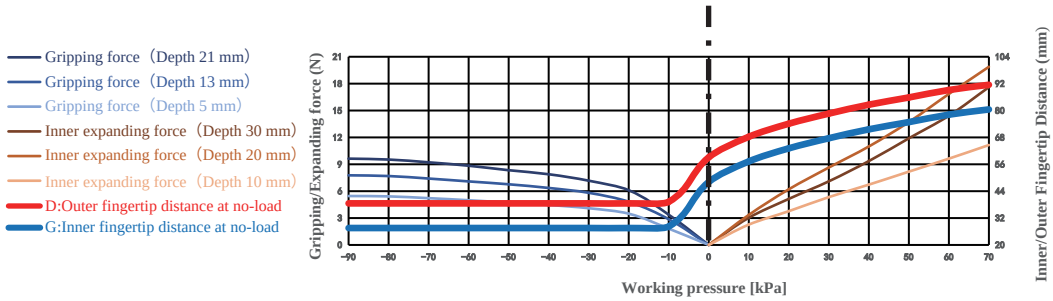

Gripping range	35-65mm	Gripping force	0-9.6N	Theoretical gripping load**	0-578g	Ideal gripping workpiece size*	50mm
Internal gripping range	60-80mm	Internal gripping force	0-19.9N	Theoretical internal gripping load**	0-1193g	Ideal internal gripping workpiece size*	62mm
Joint size	G1/8	Life time***	1.5 million times	Contact Temperature	<220℃	Safe pressure***	<70kPa

DAC Straight Fitting Installation

Scan to watch videos



DAL Side Fitting Installation



Scara Robotic Arm Installation

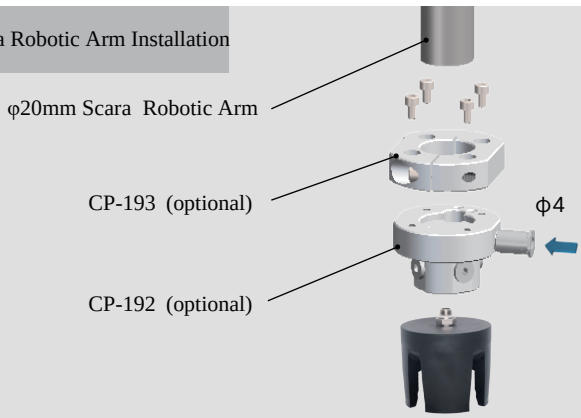

Robotic Arm Flange Side Fitting Installation

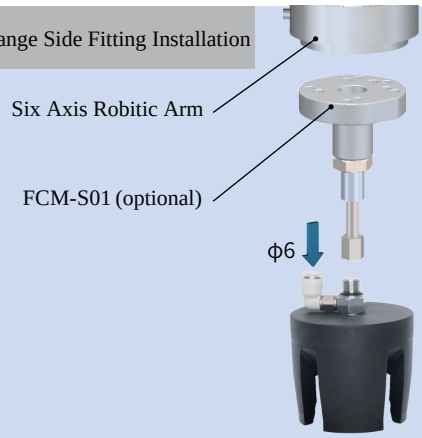

Rigid Connection Installation

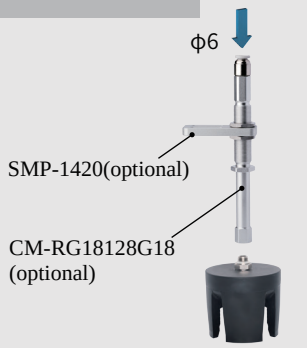

Buffer Installation

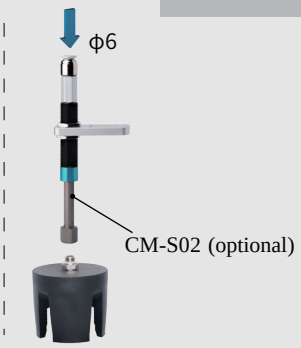

Matrix Installation

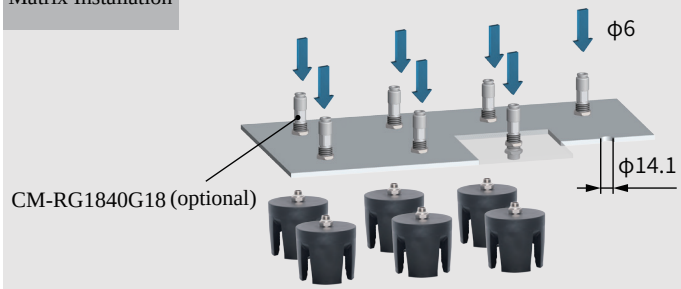

Precise Positioning Installation

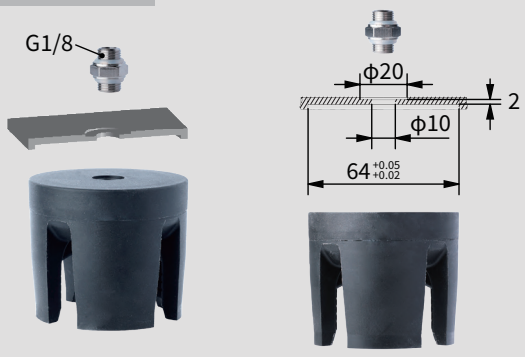

Installation of Optical Fiber Sensors

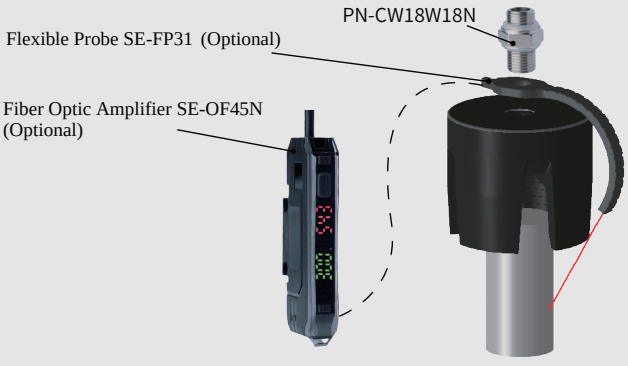

	DAC-4B70[P]/S Direct-through P Type		DAL-4B70[P]/S Side-through P Type		
	DAC-4B70[PAS]/S Direct-through Dust-free P Type		DAL-4B70[PAS]/S Side-through Dust-free P Type		
	Weight	210.1g	Weight	224.6g	

- Fingertips open under pressure state and clamp in a vacuum. Inner fingertips distance G can be adjusted by working pressure.It is suggested to be used with Rochu control unit.
- When soft grippers contact workpieces,especially those with dust-prevention needs,or miniature,lightweight and easily-adsorbable ones,choose dust-free material [PAS] preferentially.
- Food-grade material, direct food contact approved.

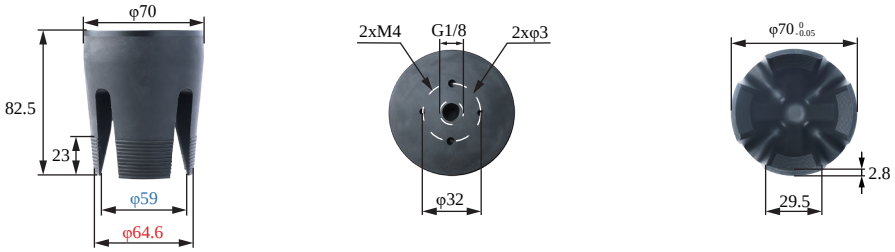

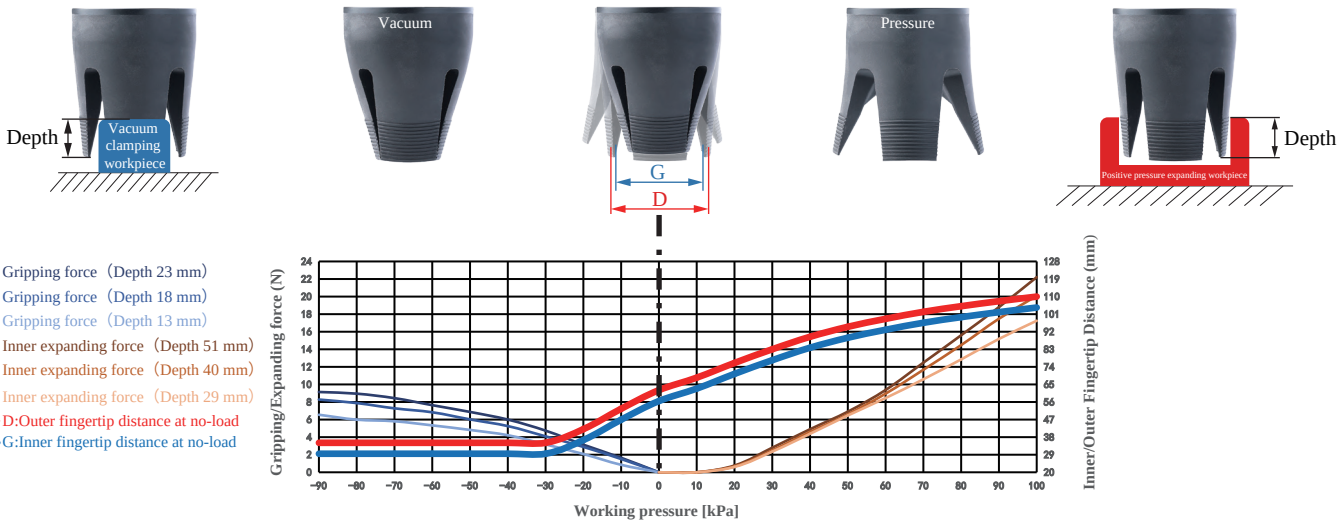

Gripping range	32-65mm	Gripping force	0-9.1N	Theoretical gripping load**	0-548g	Ideal gripping workpiece size*	50mm
Internal gripping range	60-90mm	Internal gripping force	0-22.2N	Theoretical internal gripping load**	0-1333g	Ideal internal gripping workpiece size*	75mm
Joint size	G1/8	Life time***	1.5 million times	Contact Temperature	<220°C	Safe pressure***	<100kPa

DAC Straight Fitting Installation

Scan to watch videos



DAL Side Fitting Installation



Scara Robotic Arm Installation

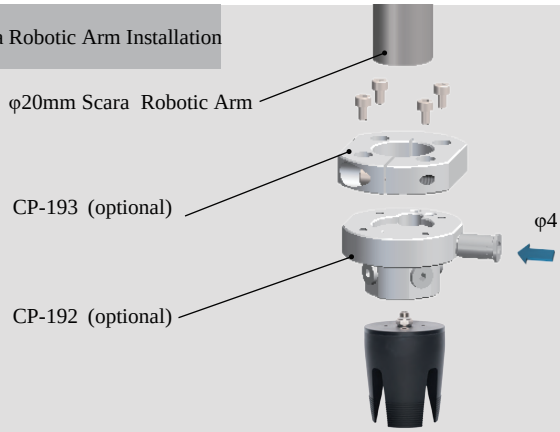

Robotic Arm Flange Side Fitting Installation

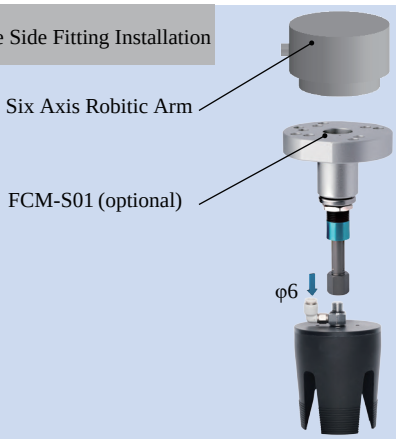

Rigid Connection Installation



Buffer Installation



Matrix Installation

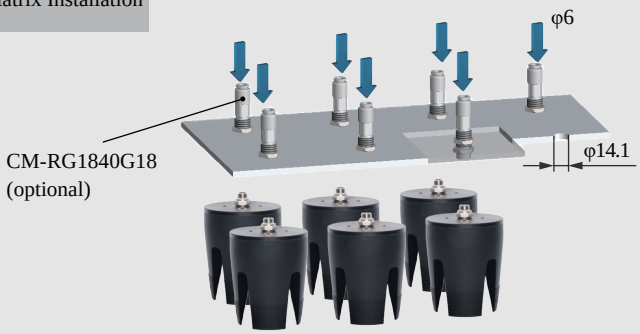

Precise Positioning Installation

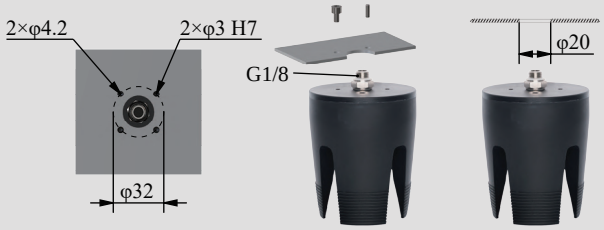

Installation of Optical Fiber Sensors

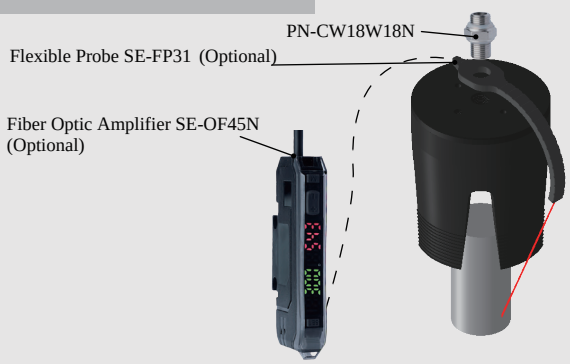

	DAC-20G51[H]/SN Direct-through H Type		DAL-20G51[H]/SN Side-through H Type	
				
	Weight	55g	**Weight**	68g

Product features

- The Soft Anemone, resembling a sea anemone, has multiple tentacles that spread out under normal pressure.
- Its soft tentacles are highly adaptable. They can deform with the workpiece for a wrapping grasp, suitable for soft, irregular, changeable workpieces without precise positioning needs.
- In vacuum, the Soft Anemone retracts to tightly hold the workpiece. It can be used with a rochu control unit, and the negative pressure can be set to adjust the grip force.















Paremeter

Gripping range	—	Gripping force	—	Theoretical gripping load**	—	Ideal gripping workpiece size*	—
Internal gripping range	—	Internal gripping force	—	Theoretical internal gripping load**	—	Ideal internal gripping workpiece size*	—
Joint size	G1/8	Life time***	1.5 million times	Contact Temperature	<220℃	Safe pressure***	<100kPa

*: The width of the cuboid that generates the maximum gripping force (two-finger gripping), the outer diameter of the cylinder (multi-finger gripping), the width of the square hole (two-finger internal gripping), or the inner diameter of the circular hole (multi-finger internal gripping);
**: Only the theoretical load of the ideal workpiece under standard working conditions is marked for reference and comparison. The real load capacity is also affected by factors such as the surface structure and roughness of the workpiece. Please take the measured data as the standard;
***: The working air pressure and the surface roughness of the workpiece in the usage scenario may have different degrees of impact on the life-time. Please configure Rochu control Unit. Do not exceed the safe air pressure.

DAC Straight Fitting Installation

Scan to watch videos

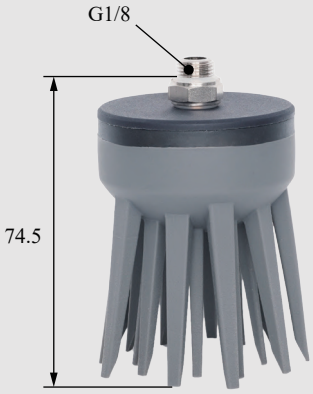

DAL Side Fitting Installation

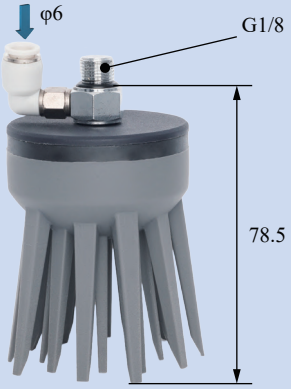

Scara Robotic Arm Installation



Robotic Arm Flange Side Fitting Installation

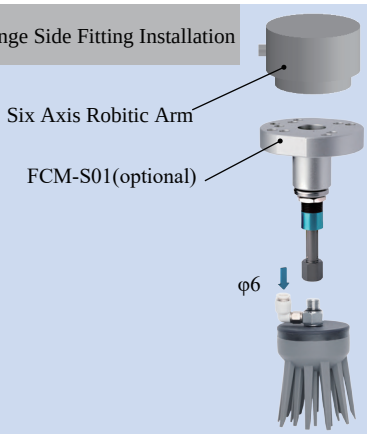

Rigid Connection Installation

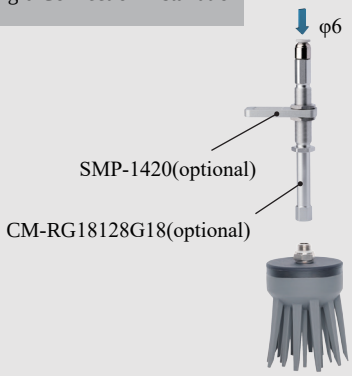

Buffer Installation



Matrix Installation

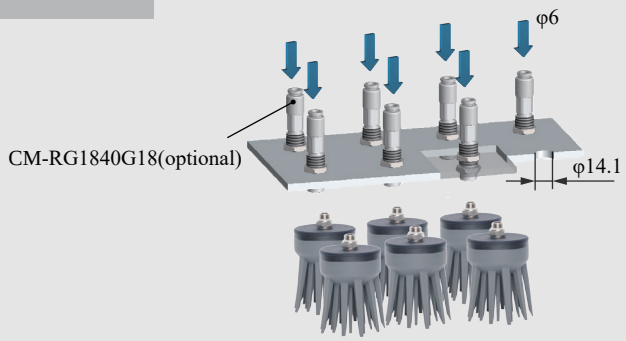

Precise Positioning Installation

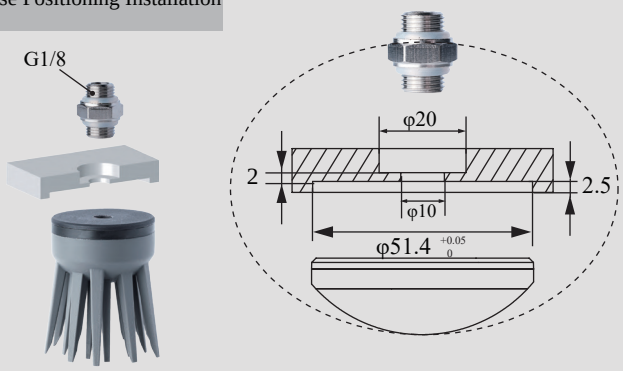

Installation of Optical Fiber Sensors

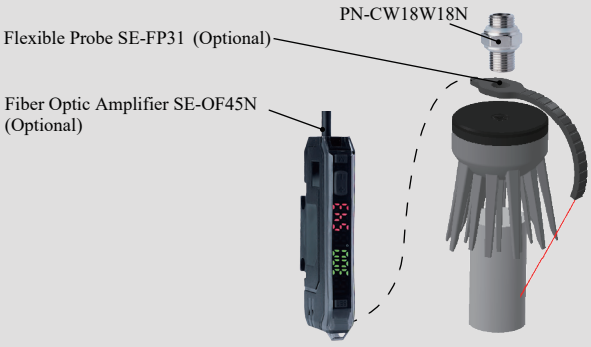



DAC-20G51[P]/SN Direct-through P Type		DAL-20G51[P]/SN Side-through P Type	
Weight	55g	**Weight**	68g



Product features

- The Soft Anemone, resembling a sea anemone, has multiple tentacles that spread out under normal pressure.
- Its soft tentacles are highly adaptable. They can deform with the workpiece for a wrapping grasp, suitable for soft, irregular, changeable workpieces without precise positioning needs.
- In vacuum, the Soft Anemone retracts to tightly hold the workpiece. It can be used with a rochu control unit, and the negative pressure can be set to adjust the grip force.















Paremeter

Gripping range	—	Gripping force	—	Theoretical gripping load**	—	Ideal gripping workpiece size*	—
Internal gripping range	—	Internal gripping force	—	Theoretical internal gripping load**	—	Ideal internal gripping workpiece size*	—
Joint size	G1/8	Life time***	1.5 million times	Contact Temperature	<220°C	Safe pressure***	<30kPa

*: The width of the cuboid that generates the maximum gripping force (two-finger gripping), the outer diameter of the cylinder (multi-finger gripping), the width of the square hole (two-finger internal gripping), or the inner diameter of the circular hole (multi-finger internal gripping);
**: Only the theoretical load of the ideal workpiece under standard working conditions is marked for reference and comparison. The real load capacity is also affected by factors such as the surface structure and roughness of the workpiece. Please take the measured data as the standard;
***: The working air pressure and the surface roughness of the workpiece in the usage scenario may have different degrees of impact on the life-time. Please configure Rochu control Unit. Do not exceed the safe air pressure.

DAC Straight Fitting Installation

Scan to watch videos



DAL Side Fitting Installation

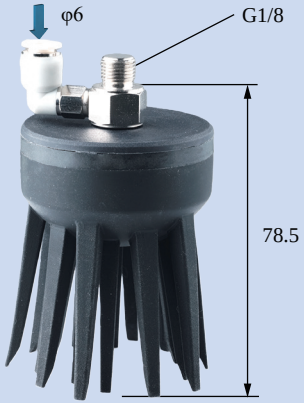

Scara Robotic Arm Installation



Robotic Arm Flange Side Fitting Installation

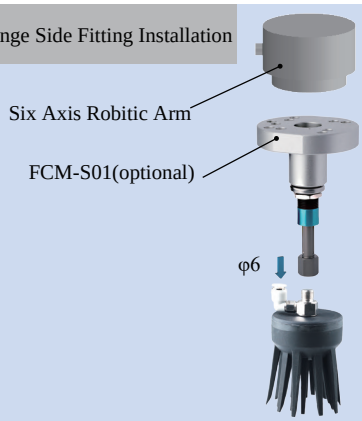

Rigid Connection Installation

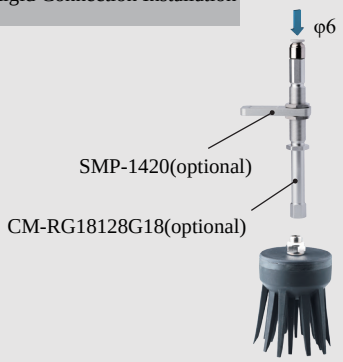

Buffer Installation



Matrix Installation

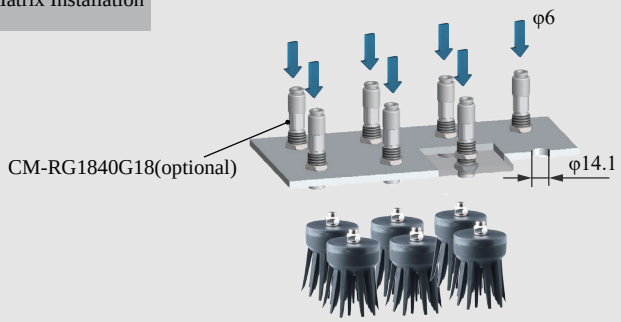

Precise Positioning Installation

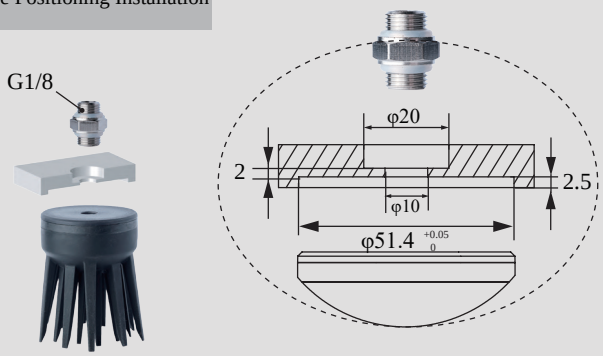

Installation of Optical Fiber Sensors

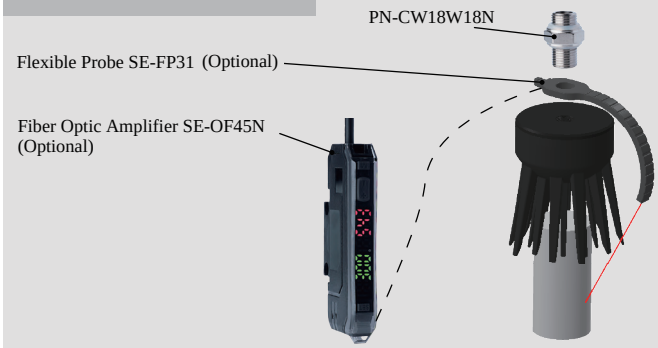

B-20G51[P]/SN

DAC-32G51[P]/SN Direct-through P Type		DAL-32G51[P]/SN Side-through P Type	
			
Weight	52g	**Weight**	65g

Product features

- The Soft Anemone, resembling a sea anemone, has multiple tentacles that spread out under normal pressure.
- Its soft tentacles are highly adaptable. They can deform with the workpiece for a wrapping grasp, suitable for soft, irregular, changeable workpieces without precise positioning needs.
- In vacuum, the Soft Anemone retracts to tightly hold the workpiece. It can be used with a rochu control unit, and the negative pressure can be set to adjust the grip force.

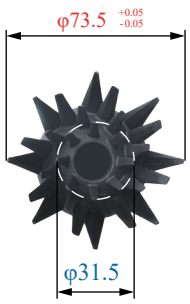





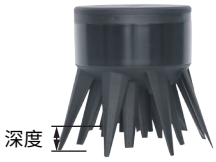







B-32G51[P]/SN

Paremeter

Gripping range	—	Gripping force	—	Theoretical gripping load**	—	Ideal gripping workpiece size*	—
Internal gripping range	—	Internal gripping force	—	Theoretical internal gripping load**	—	Ideal internal gripping workpiece size*	—
Joint size	G1/8	Life time***	1.5 million times	Contact Temperature	<220°C	Safe pressure***	Use under single negative pressure

*: The width of the cuboid that generates the maximum gripping force (two-finger gripping), the outer diameter of the cylinder (multi-finger gripping), the width of the square hole (two-finger internal gripping), or the inner diameter of the circular hole (multi-finger internal gripping);
**: Only the theoretical load of the ideal workpiece under standard working conditions is marked for reference and comparison. The real load capacity is also affected by factors such as the surface structure and roughness of the workpiece. Please take the measured data as the standard;
***: The working air pressure and the surface roughness of the workpiece in the usage scenario may have different degrees of impact on the life-time. Please configure Rochu control Unit. Do not exceed the safe air pressure.

DAC Straight Fitting Installation

Scan to watch videos

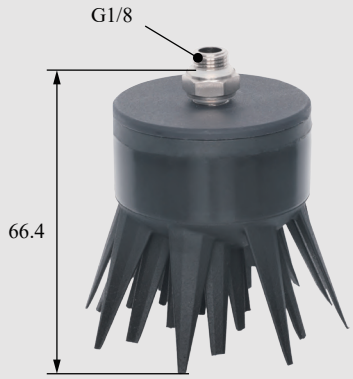

DAL Side Fitting Installation

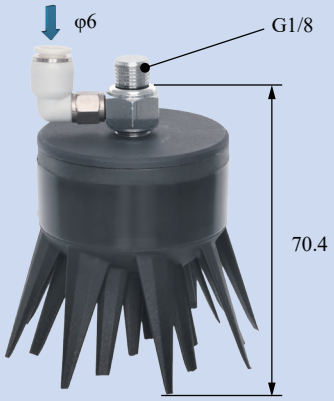

Scara Robotic Arm Installation

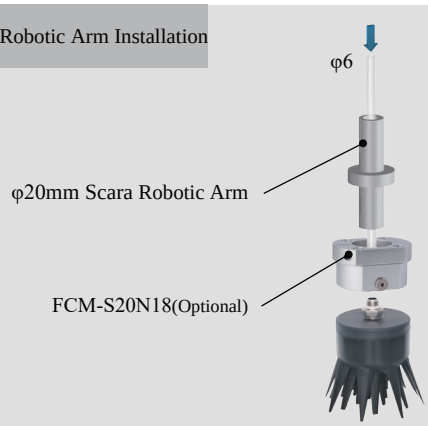

Robotic Arm Flange Side Fitting Installation

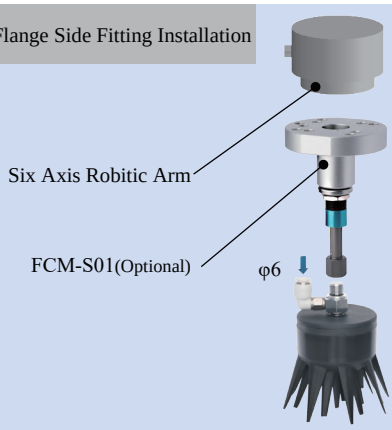

Rigid Connection Installation

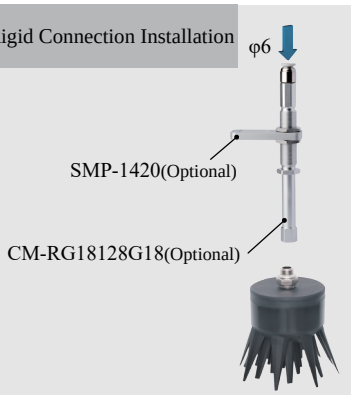

Buffer Installation



Matrix Installation

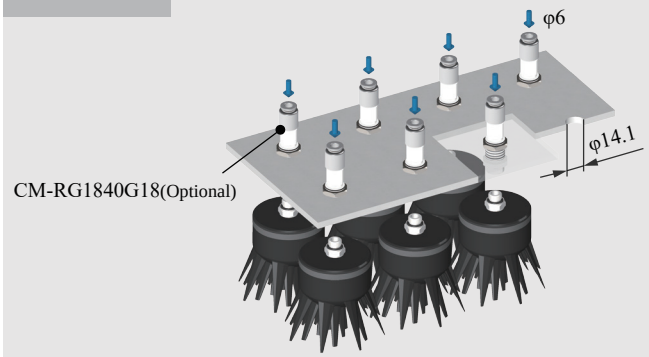

Precise Positioning Installation

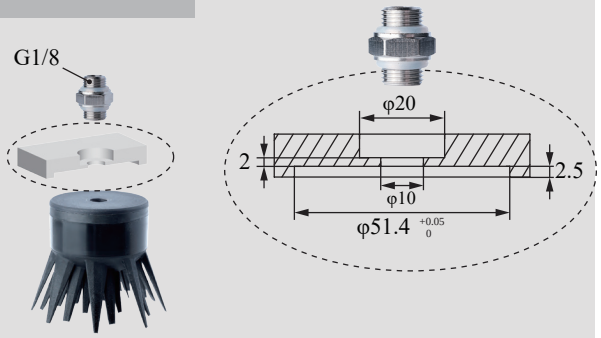

Installation of Optical Fiber Sensors

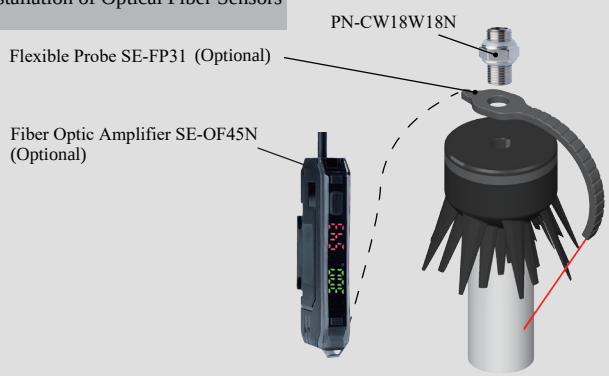

B-32G51[P]/SN

	DAC-H5024[P]/S Direct-through P Type		DAL-H5024[P]/S Side-through P Type	
	**Weight**	73.2g	**Weight**	85.7g



Product features

- Special for soft fabrics, used for layered picking and precise positioning of fabrics.
- The soft friction surface with special texture can "rub" up the fabric. Combined with the rigid positioning end, the blanking error can reach ±2mm.
- The fingertip is opened in positive pressure state and clamped in vacuum state. The clamping force is adjusted by working air pressure. It is recommended to be used with Rochu control unit.



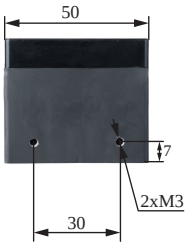













Paremeter

Gripping range	—	Gripping force	0-2N	Theoretical gripping load**	200g	Ideal gripping workpiece size*	—
Internal gripping range	—	Internal gripping force	—	Theoretical internal gripping load**	—	Ideal internal gripping workpiece size*	—
Joint size	G1/8	Life time***	1.5 million times	Contact Temperature	<180°C	Safe pressure***	<70kPa

*: The width of the cuboid that generates the maximum gripping force (two-finger gripping), the outer diameter of the cylinder (multi-finger gripping), the width of the square hole (two-finger internal gripping), or the inner diameter of the circular hole (multi-finger internal gripping);
**: Only the theoretical load of the ideal workpiece under standard working conditions is marked for reference and comparison. The real load capacity is also affected by factors such as the surface structure and roughness of the workpiece. Please take the measured data as the standard;
***: The working air pressure and the surface roughness of the workpiece in the usage scenario may have different degrees of impact on the life-time. Please configure Rochu control Unit. Do not exceed the safe air pressure.

DAC Straight Fitting Installation

Scan to watch videos



DAL Side Fitting Installation

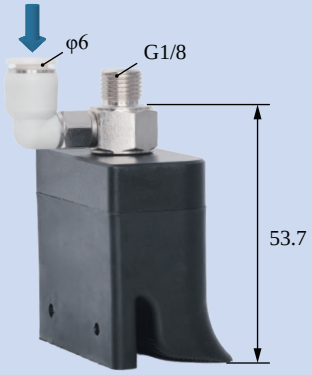

Installation method

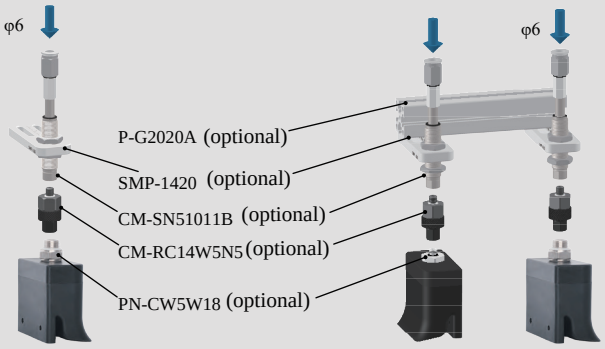

Installation of Optical Fiber Sensors

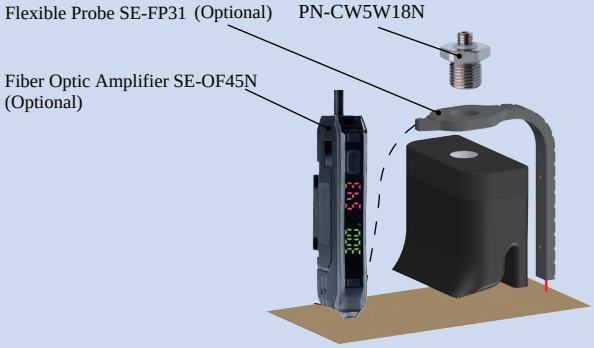

Unilateral stratification

Product Name	Model	Quantity
Beak Module	B-H5024[P]/S	2
Rotary Joint	CM-RC14W5N5	2
Connection Module	CM-S04	2
Slide Mounting Plate	SMP-14	2
Flange Connection Module	FCM-R03	1
Profile	P-G2020A<300>	1



Frontal stratification

Product Name	Model	Quantity
Beak Module	B-H5024[P]/S	6
Rotary Joint	CM-RC14W5N5	6
Connection Module	CM-S04	6
Slide Mounting Plate	SMP-14	6
Flange Connection Module	FCM-R03	1
Profile	P-G2020A<500>	2
Profile	P-G2020A<300>	1
Connector Part	CP-001	2

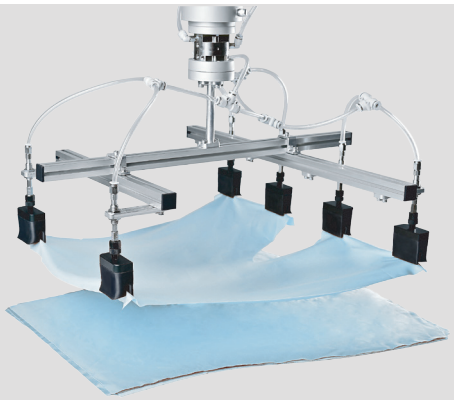

	DAC-H5024[LP]/S Direct-through Anti-static P Type		DAL-H5024[LP]/S Side-through Anti-static P Type	
				
	Weight	73.2g	**Weight**	85.7g

Product features

- Special for soft fabrics, used for layered picking and precise positioning of fabrics.
- The soft friction surface with special texture can "rub" up the fabric. Combined with the rigid positioning end, the blanking error can reach ±2mm.
- The fingertip is opened in positive pressure state and clamped in vacuum state. The clamping force is adjusted by working air pressure. It is recommended to be used with Rochu control unit.

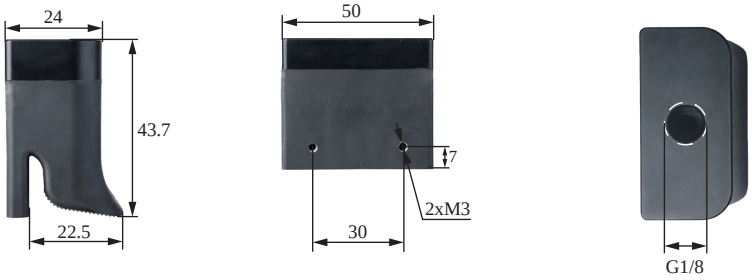

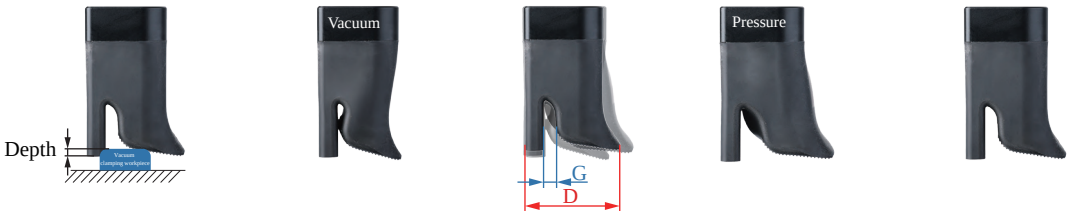

Paremeter

Gripping range	—	Gripping force	0-2N	Theoretical gripping load**	200g	Ideal gripping workpiece size*	—
Internal gripping range	—	Internal gripping force	—	Theoretical internal gripping load**	—	Ideal internal gripping workpiece size*	—
Joint size	G1/8	Life time***	1.5 million times	Contact Temperature	<180°C	Safe pressure***	<60kPa

*: The width of the cuboid that generates the maximum gripping force (two-finger gripping), the outer diameter of the cylinder (multi-finger gripping), the width of the square hole (two-finger internal gripping), or the inner diameter of the circular hole (multi-finger internal gripping);
**: Only the theoretical load of the ideal workpiece under standard working conditions is marked for reference and comparison. The real load capacity is also affected by factors such as the surface structure and roughness of the workpiece. Please take the measured data as the standard;
***: The working air pressure and the surface roughness of the workpiece in the usage scenario may have different degrees of impact on the life-time. Please configure Rochu control Unit. Do not exceed the safe air pressure.

DAC Straight Fitting Installation

Scan to watch videos



DAL Side Fitting Installation

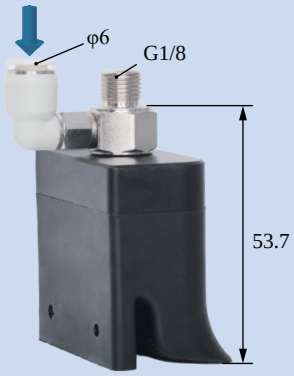

Installation method

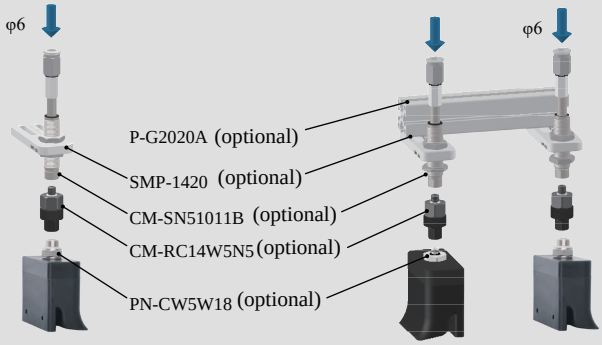

Installation of Optical Fiber Sensors

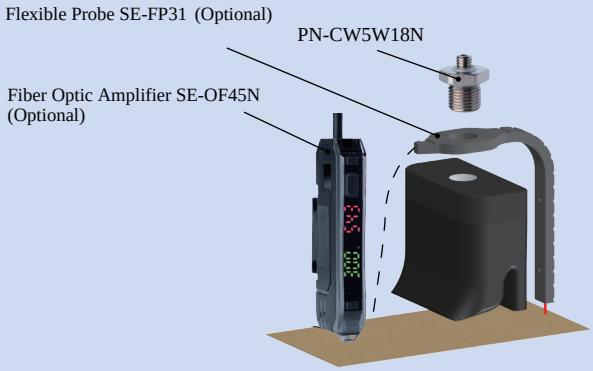

Unilateral stratification

Product Name	Model	Quantity
Beak Module	B-H5024[LP]/S	2
Rotary Joint	CM-RC14W5N5	2
Connection Module	CM-S04	2
Slide Mounting Plate	SMP-14	2
Flange Connection Module	FCM-R03	1
Profile	P-G2020A<300>	1



Frontal stratification

Product Name	Model	Quantity
Beak Module	B-H5024[LP]/S	6
Rotary Joint	CM-RC14W5N5	6
Connection Module	CM-S04	6
Slide Mounting Plate	SMP-14	6
Flange Connection Module	FCM-R03	1
Profile	P-G2020A<500>	2
Profile	P-G2020A<300>	1
Connector Part	CP-001	2

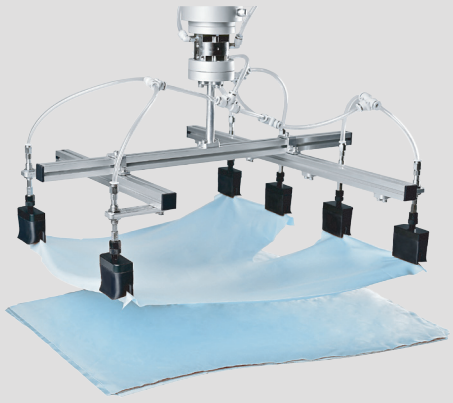

N

fingertip



N-Y Series Soft Wing Fingertip



N-N Series Soft Tweezer Fingertips

N-Y Series Soft Wing Fingertip

- High Compatibility: Fits GN series soft jaw fingertips; flexible film precisely conforms to workpiece contours.
- Damage-Free Gripping: Designed for precision fragile workpieces, preventing scratches and deformation during handling.
- Irregular Shape Compatibility: Excellent wrapping for stable gripping of round lens edges, irregular plastics and complex shapes.

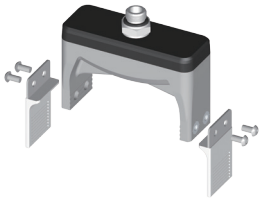



A Fingerprint - Soft Type

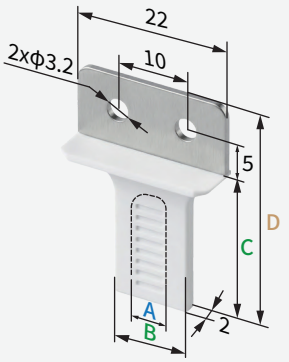

				
	N-Y2105A[R]	N-Y2607A[R]	N-Y2612A[R]	N-Y2617A[R]
A	5mm	7mm	12mm	17mm
B	11mm	13mm	18mm	22mm
C	21.5mm	26.5mm	26.5mm	26.5mm
D	31.5mm	36.5mm	36.5mm	36.5mm
weight	3.4g	3.8g	4.3g	4.6g

A Fingerprint - Flexible Type

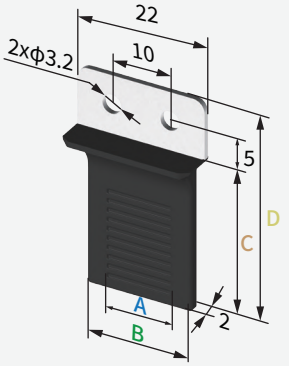

		
	N-Y2612A[P]	N-Y2617A[P]
A	12mm	17mm
B	18mm	22mm
C	26.5mm	26.5mm
D	36.5mm	36.5mm
weight	4.3g	4.6g

B Fingerprint - Soft Type

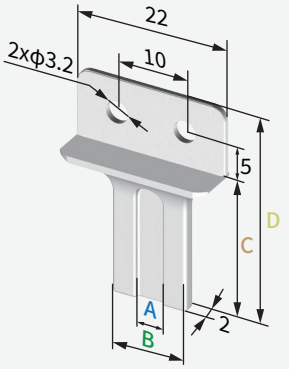

				
	N-Y2105B[R]	N-Y2607B[R]	N-Y2612B[R]	N-Y2617B[R]
A	5mm	7mm	12mm	17mm
B	11mm	13mm	18mm	22mm
C	21.5mm	26.5mm	26.5mm	26.5mm
D	31.5mm	36.5mm	36.5mm	36.5mm
weight	3.4g	3.8g	4.1g	4.4g

QB Fingerprint - Flexible Type

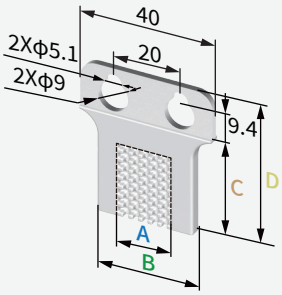

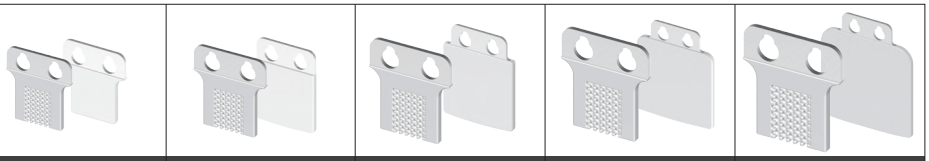

	N-Y3120QB[R]	N-Y4130QB[R]	N-Y5140QB[R]	N-Y6150QB[R]	N-Y7160QB[R]
A	20mm	30mm	40mm	50mm	60mm
B	29mm	40mm	51mm	62mm	73mm
C	31mm	41mm	51mm	61mm	71mm
D	45mm	55mm	65mm	75mm	85mm
weight	14.8g	18.5g	25.3g	32.5g	40.3g

QB Fingerprint - Enhanced Type

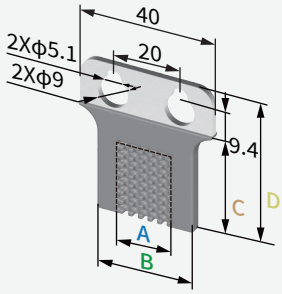

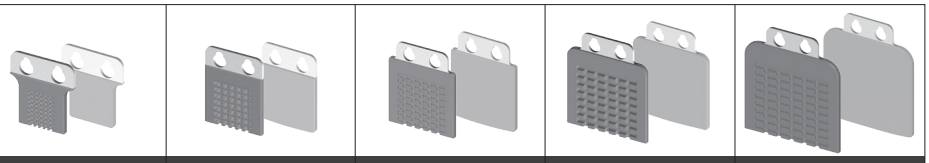

	N-Y3120QB[H]	N-Y4130QB[H]	N-Y5140QB[H]	N-Y6150QB[H]	N-Y7160QB[H]
A	20mm	30mm	40mm	50mm	60mm
B	29mm	40mm	51mm	62mm	73mm
C	31mm	41mm	51mm	61mm	71mm
D	45mm	55mm	65mm	75mm	85mm
weight	15.2g	19.1g	26.2g	33.8g	42.1g

QB Fingerprint - Flexible Type

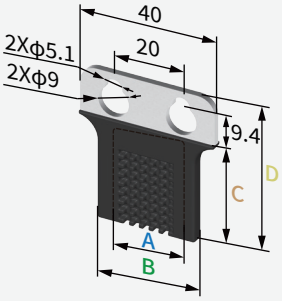

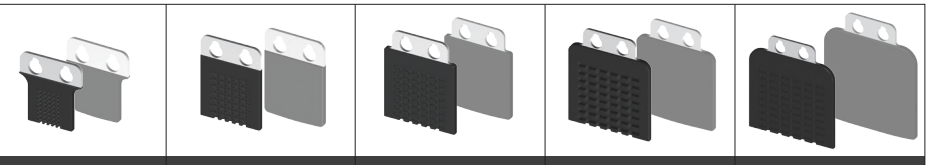

	N-Y3120QB[P]	N-Y4130QB[P]	N-Y5140QB[P]	N-Y6150QB[P]	N-Y7160QB[P]
A	20mm	30mm	40mm	50mm	60mm
B	29mm	40mm	51mm	62mm	73mm
C	31mm	41mm	51mm	61mm	71mm
D	45mm	55mm	65mm	75mm	85mm
weight	14.9g	18.5g	25.3g	32.5g	40.3g

B Fingerprint - Flexible Anti-Static Type

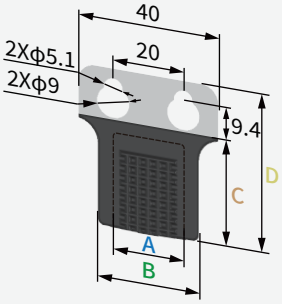

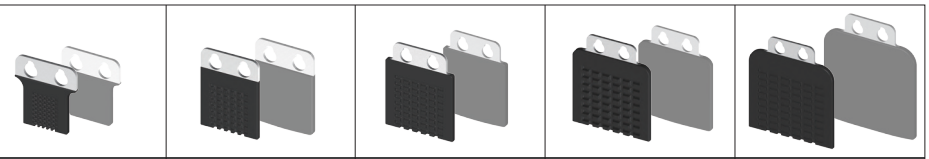

	N-Y3120QB[LP]	N-Y4130QB[LP]	N-Y5140QB[LP]	N-Y6150QB[LP]	N-Y7160QB[LP]
A	20mm	30mm	40mm	50mm	60mm
B	29mm	40mm	51mm	62mm	73mm
C	31mm	41mm	51mm	61mm	71mm
D	45mm	55mm	65mm	75mm	85mm
weight	14.9g	19.3g	25.4g	32.5g	40.4g

QB Fingerprint - Oil-Resistant Type

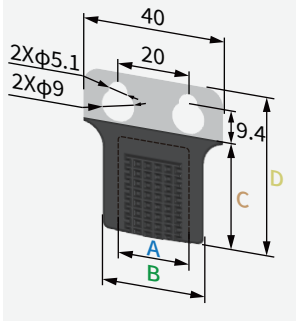

				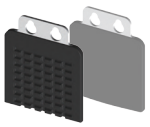	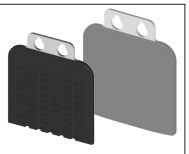
	N-Y3120QB[NP]	N-Y4130QB[NP]	N-Y5140QB[NP]	N-Y6150QB[NP]	N-Y7160QB[NP]
A	20mm	30mm	40mm	50mm	60mm
B	29mm	40mm	51mm	62mm	73mm
C	31mm	41mm	51mm	61mm	71mm
D	45mm	55mm	65mm	75mm	85mm
weight	15.3g	18.5g	26.6g	34.4g	42.9g

AC Fingerprint - Anti-Static Type

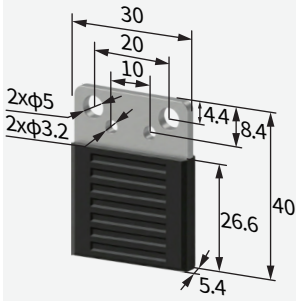

	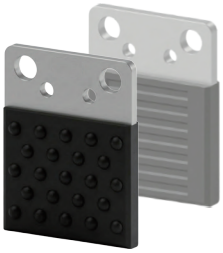
	N-Y2616AC[LP]
weight	10.1g

AC Fingerprint - Anti-Static Type

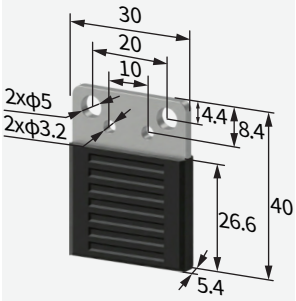

	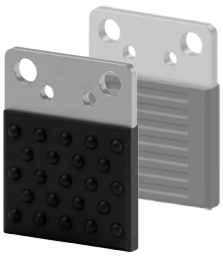
	N-Y2616AC[NP]
weight	10.1g

DAC-2N0810[H]/SC+NN1604P[H] Direct-through H Type(With fingertips)	DAC-2N0810[H]/SC Direct-through Precision Positioning H Type	DAS-2N0810[H]/SC+NN1604P[H] Side-through H Type	DAS-2N0810[H]/SC Multi-way Precision Positioning H Type
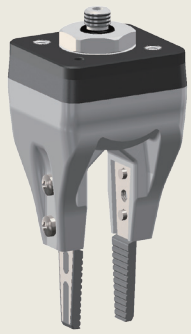	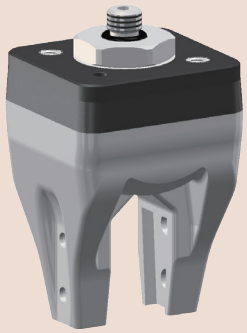	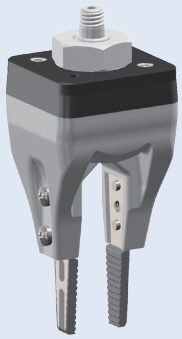	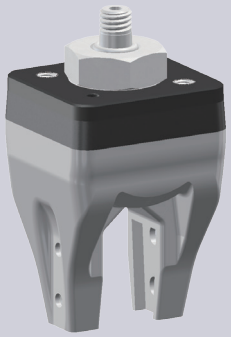
Weight 28.2g	Weight 25g	Weight 23.8g	Weight 20.6g

- Fingertip open under pressure and clamped in a vacuum. Fingertip distance G can be adjusted by working pressure.It is suggested to be used with Rochu control unit.
- Suitable for workpieces with complex shapes. Profiled fingertips can be custom-designed according to the workpiece contour and installed via the threaded holes on the soft gripper fingers. Rigid materials such as plastic or metal can be selected for the profiled fingertips based on the workpiece requirements.

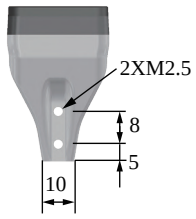

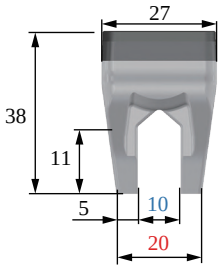

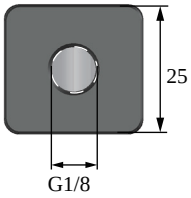

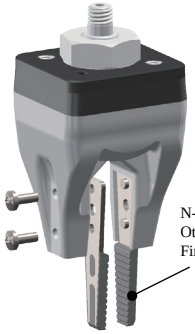

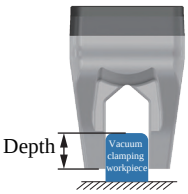









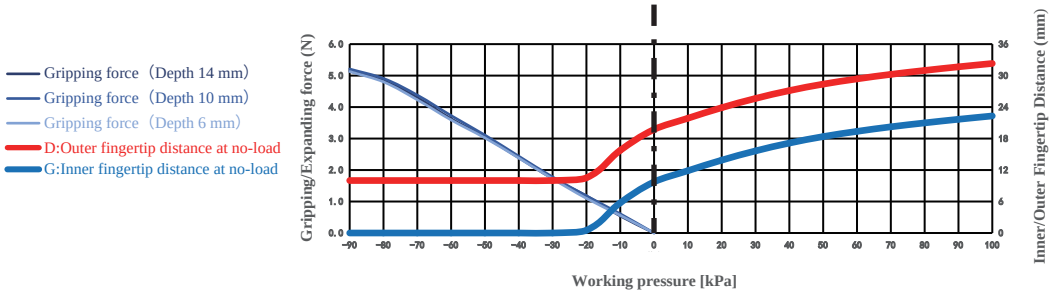

The clamping/inner-supporting force data of this product are measured based on the ideal workpiece size.

Gripping range	0-20mm	Gripping force	0-7.5N	Theoretical gripping load**	0-299g	Ideal gripping workpiece size*	8mm
Internal gripping range	—	Internal gripping force	—	Theoretical internal gripping load**	—	Ideal internal gripping workpiece size*	—
Joint size	G1/8	Life time***	1.5 million times	Contact Temperature	<220℃	Safe pressure***	<100kPa

The width of the cuboid that generates the maximum gripping force (two-finger gripping), the outer diameter of the cylinder (multi-finger gripping), the width of the square hole (two-finger internal gripping), or the inner diameter of the circular hole (multi-finger internal gripping);

DAC + Soft Tweezer Module (Direct-through)

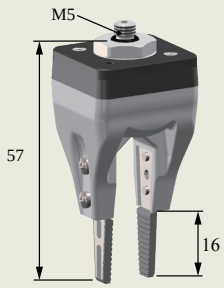

DAC Module (Direct-through)

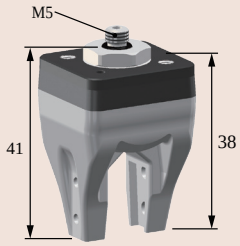

DAS + Soft Tweezer Module (Precision Positioning Straight-through)

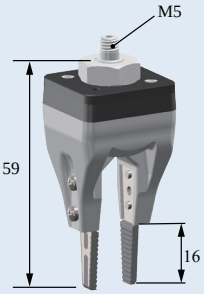

DAS Module (Precision Positioning Straight-through)

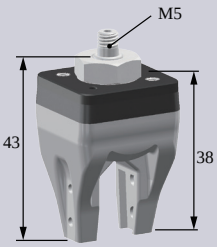

DAC Inspection + Soft Tweezer Installation

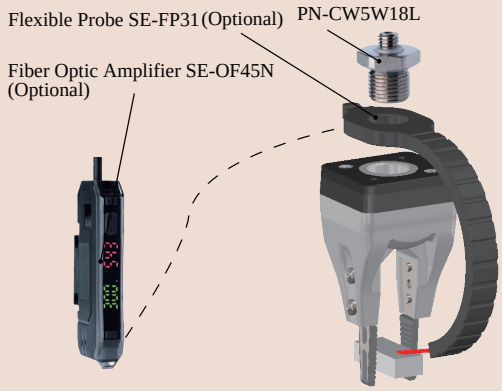

DAS Precise Positioning Hard Rod Installation

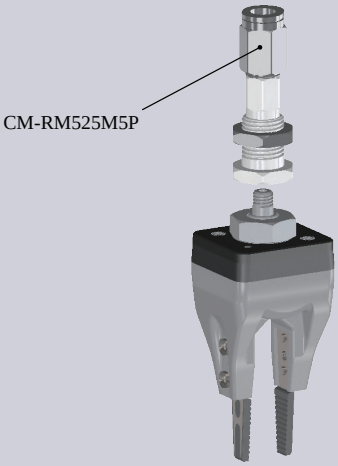

DAC Precise Positioning Partition Straight-through Installation

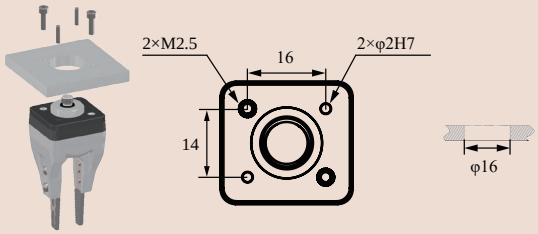

DAC Side-pass adapter installation

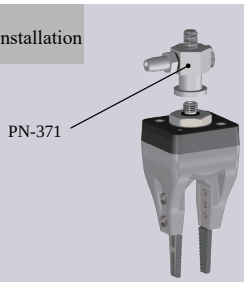

Rigid Connection Installation

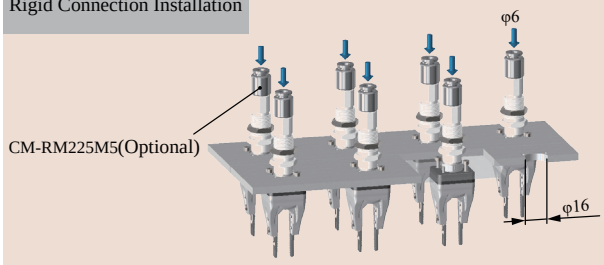

Robotic Arm Flange Side Fitting Installation

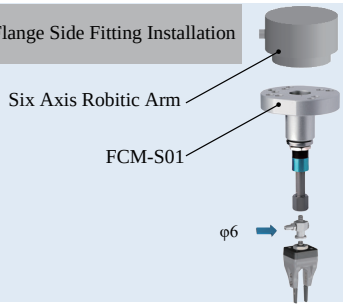

Scara Robotic Arm Installation

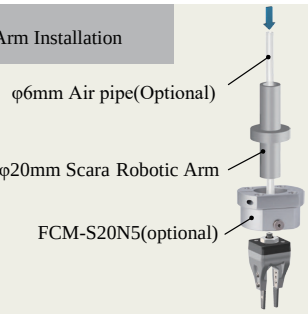

Rigid Connection Installation

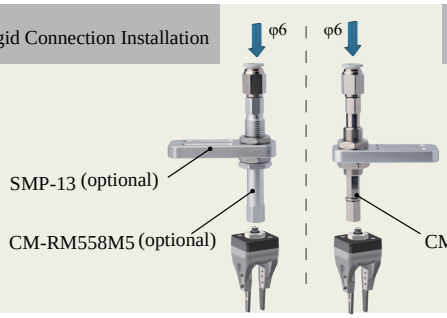

Buffer Installation

N-N Series Soft Tweezer Fingertips

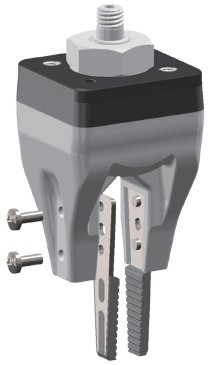

- Special for Micro Workpieces: Mountable on N-series soft grippers to handle tiny fragile products.
- Versatility: Multiple fingertip shapes and materials adapt to various application scenarios.
- High Adaptability: Suitable for narrow tray spaces.

N-N1604P[H]

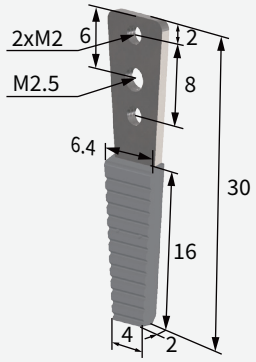

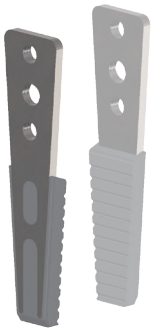

Material	Enhanced soft rubber
weight	3.4g

N-N1602R[H]

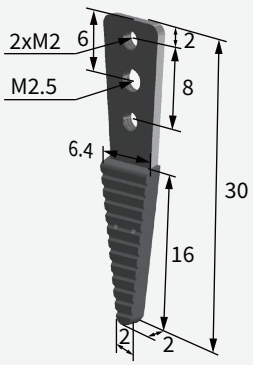



Material	Enhanced soft rubber
weight	1.2g

N-N1604P[LH]

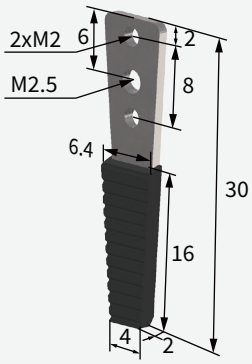

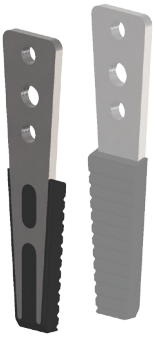

Material	Anti-static enhanced soft rubber
weight	3.8g

N-N1602R[LH]

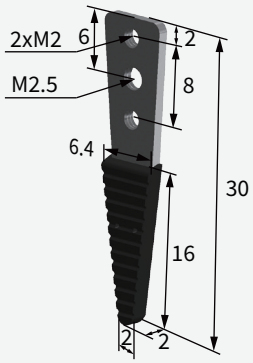



Material	Anti-static enhanced soft rubber
weight	1.2g

N-NP251

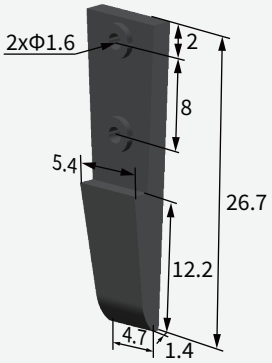

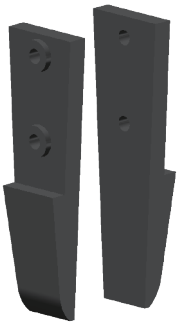

Material	Hard plastic PPS
weight	4.3g

N-NP252

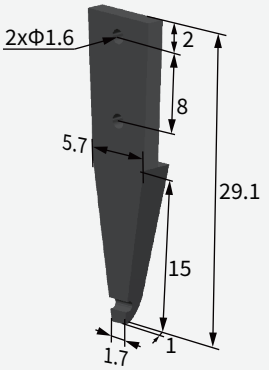

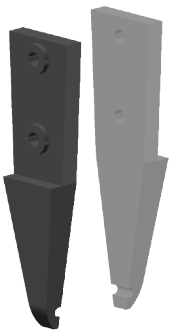

Material	Hard plastic PPS
weight	4.6g

GPC

Gripper Protective Cover
(Protective suit)





Gripper Protective Cover



GPC series Protective Installation

·Protection & Anti-fouling: Isolates contaminants such as debris, oil stains, and dust to protect the soft

·Measuring Jaw Customization: Custom-made according to the size of the soft jaws, lightweight in texture and flexible in use.

·Easy Installation: Designed with drawstrings for quick wearing and convenient replacement.

·Perfect Partner: Designed to be used with the fingertip ends of the SoftTouch N Series.

Model Parameters



Size Range	GPC Soft Claw Model	Compatible with Soft Claw Models
S	GPC-B1S[CA1]	B-1GN3024 series
		B-1GN3527 series
M	GPC-B1M[CA1]	B-1GN4030 series
		B-1UN4030 series
L	GPC-B1L[CA1]	B-1GN5040 series
XL	GPC-B1XL[CA1]	B-1GN7056 series



Size Range	GPC Soft Claw Model	Compatible with Soft Claw Models
S	GPC-B2S[CA1]	B-2GN2232 series
		B-2GN2237 series
M	GPC-B2M[CA1]	B-2GN2242 series
		B-2GN2247 series
L	GPC-B2L[CA1]	B-2GN2252 series
		B-2GN2257 series
XL	GPC-B2XL[CA1]	B-2GN4067 series
XXL	GPC-B2XXL[CA1]	B-2GN4087 series



1 Slip onto the soft claw	2 Install the fingertip	3 Tighten the closure	4 Installation Complete
Align the open end of the protective cover with the soft claw and slide it on from the tip.	Install the SoftTouch N Series fingertip onto the end of the soft claw.	Pull the drawstring to both sides to tighten the bottom closure of the protective cover.	The protective cover has been installed, and the soft claw is fully protected.

VS/VSM

Vacuum Sucker Module



VS Series Vacuum Sucker

- Contoured nozzles are specially designed for small, irregular and curved parts and can be customized.

  Made of high-quality silicone, they fit tightly without damaging workpieces.
- The non-marking material resists sticking. For anti-static use, [LPAS] and [LHAS] materials are available.

VSM-S11312[HAS]W5



load:2.8g	weight:2.3g

VSM-S10015[HAS]W5



load:5.4g	weight:2.3g

VSM-S14315[HAS]W5



load:5.5g	weight:2.3g

VSM-S14412[HAS]W5

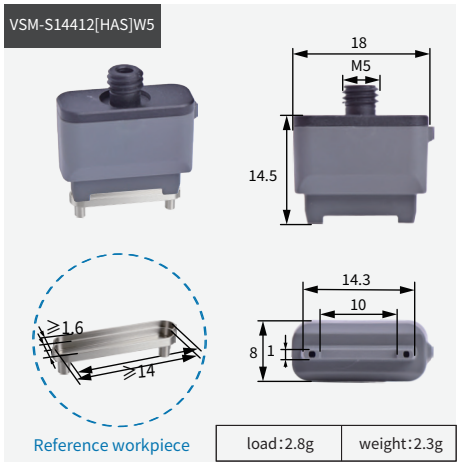

load:2.8g	weight:2.3g

VSM-S14416[HAS]W5



load:5.6g	weight:2.3g

VSM-SA14416[HAS]W5



load:2.1g	weight:2.3g

VSM-S14813[HAS]W5

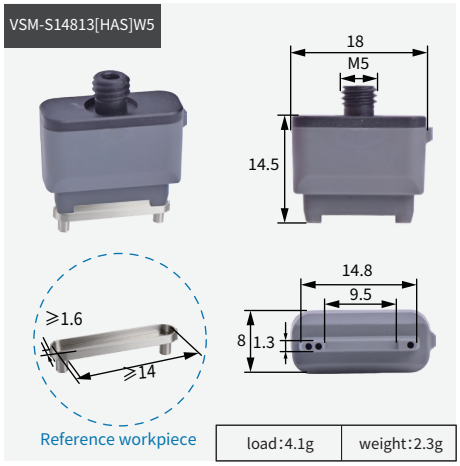

load:4.1g	weight:2.3g

VSM-S16423[HAS]W5



load:6.6g	weight:2.3g

VSM-S7221[HAS]W5

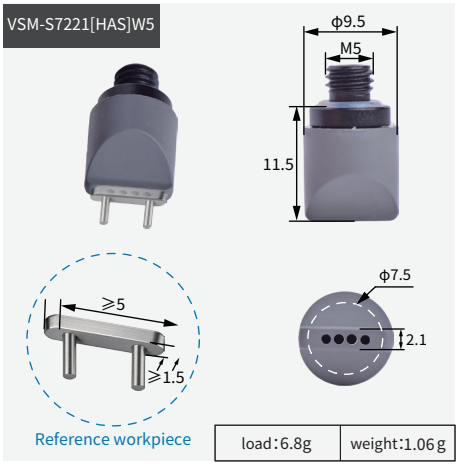

load:6.8g	weight:1.06 g

Vacuum Sucker Module

VSM-D2[HAS]W3

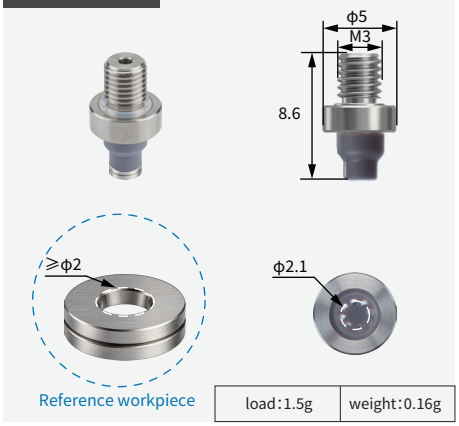

Reference workpiece

load:1.5g	weight:0.16g

VSM-D2[LHAS]W3

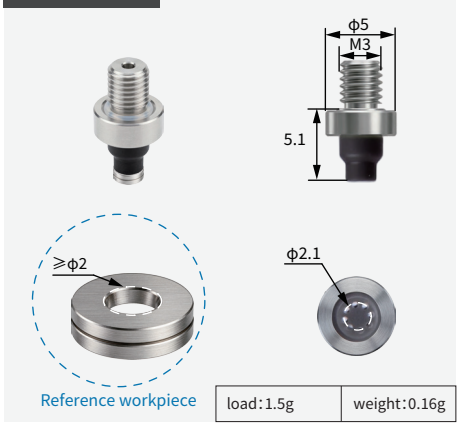

Reference workpiece

load:1.5g	weight:0.16g

VSM-D5H5[LPAS]W3



Reference workpiece

load:4.2g	weight:0.23g

VSM-D5H5[HAS]W3



Reference workpiece

load:4.2g	weight:0.23g

VSM-S5050[HAS]W5



Reference workpiece

load:1.2g	weight:0.82g

VSM-D5H4[HAS]W3

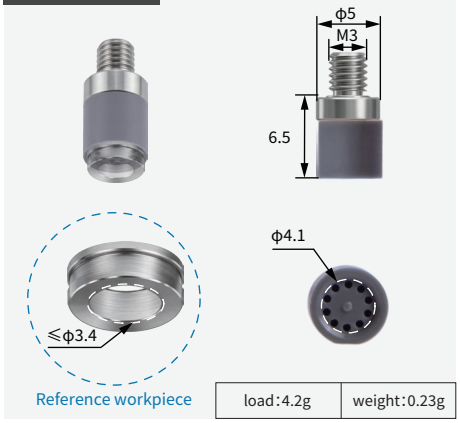

Reference workpiece

load:4.2g	weight:0.23g

VSM-D5H4[LPAS]W3



Reference workpiece

load:4.2g	weight:0.23g

VSM-D4H15[HAS]W5

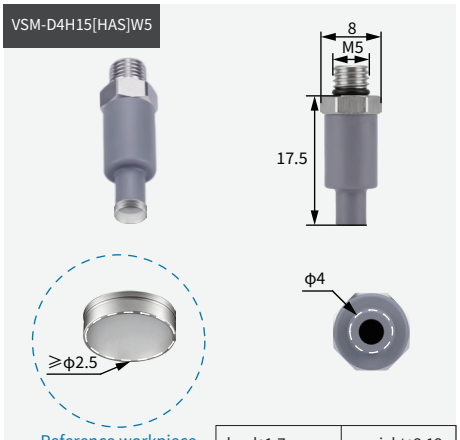

Reference workpiece

load:1.7g	weight:2.12g

VSM-S4030[PAS]W5



Reference workpiece

load:3.7g	weight:0.69g

VSM-S4530[HAS]W5



Reference workpiece

load:6.8g	weight:0.87g

VSM-S2217C[HAS]N5

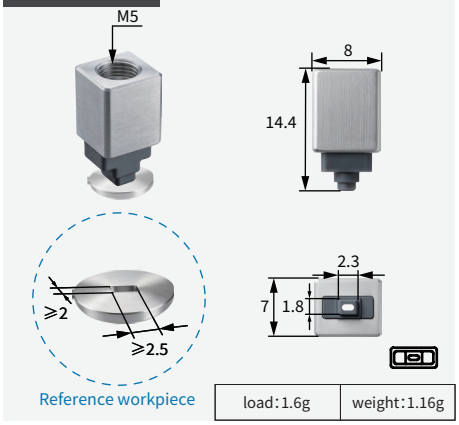

Reference workpiece

load:1.6g	weight:1.16g

VSM-S4022C[HAS]N5

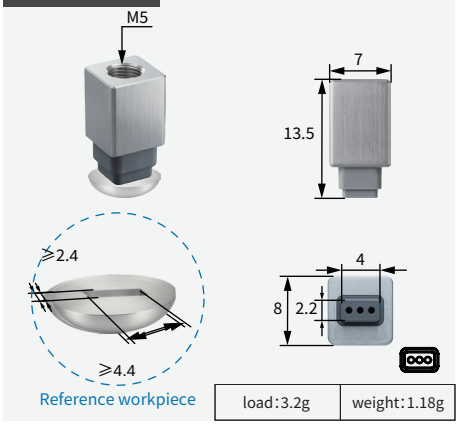

Reference workpiece

load:3.2g	weight:1.18g

VSM-S4217C[HAS]N5

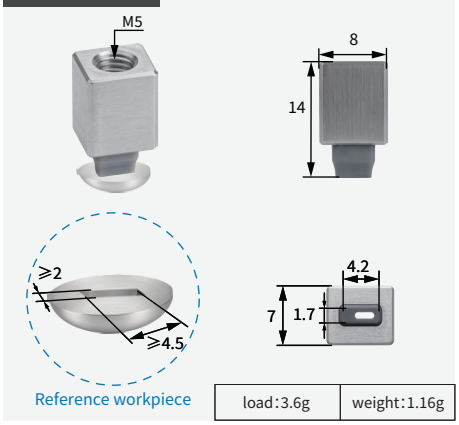

Reference workpiece

load:3.6g	weight:1.16g

VSM-S4218C[HAS]N5

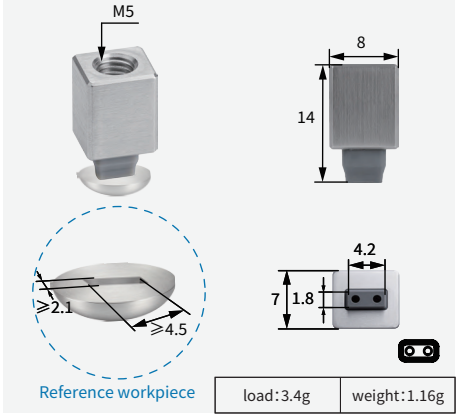

Reference workpiece

load:3.4g	weight:1.16g

VSM-S4020[HAS]W5

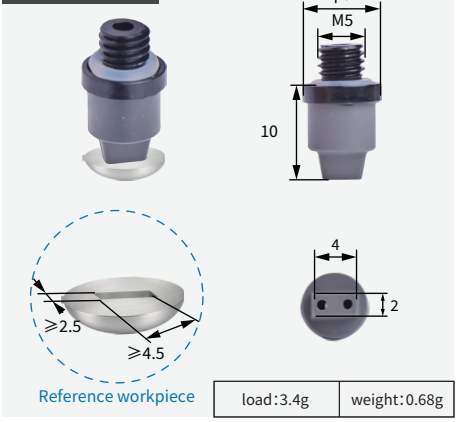

Reference workpiece

load:3.4g	weight:0.68g

VSM-S7628[PAS]W5



Reference workpiece

load:3.7g	weight:0.85g

VSM-S5024[HAS]W5



Reference workpiece

load:4.9g	weight:0.8g

FMA/ F

Finger Module / Finger



Finger Module A



Finger Module B



Finger Module C

The Flexible Finger Module [FMA]

- The Flexible Finger Module [FMA] consists of two parts: the Flexible Finger [F] and the Fixed Module [SFM].
- Select the appropriate Flexible Finger [F] according to the weight and size of the workpiece to be gripped. Under the same operating air pressure, wider fingers provide higher gripping force, while shorter fingers offer better repeat positioning accuracy.
- Select the suitable Fixed Module [SFM] based on the air inlet method, installation position and assembly method; the V3 series is recommended.
- Depending on the size and material of the flexible finger, the safe operating air pressure of the Flexible Finger Module [FMA] is 120–300 kPa. Please refer to the product label or package instructions.

Fixed Module	Pictures	Structural Features	Assembly method
V3 Siner-finger Module		• **Features and application scenarios:** It can be installed with the SMP sliding mounting plate.Finger spacing and angle are adjustable. • **Fixing method:Can be fixed from three directions (optional).** • **Air inlet:** The air connector can be installed from one direction only.	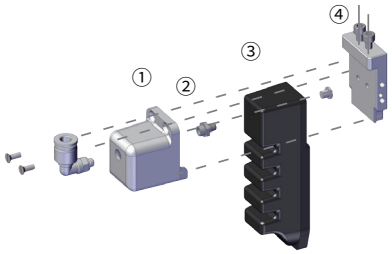 Spare Part: ① Shell ② Plug ③ Finger ④ Mounting block
V2 Single-finger Module		• **Features and application scenarios:** Finger spacing and angle are adjustable. Can be installed with SMP sliding mounting plate. • **Fixing method:** Can be fixed from four directions (optional). • **Air inlet:** Air connectors can be installed from three directions (optional).	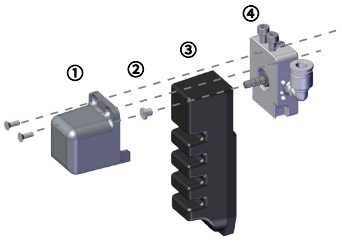 Spare Part: ① Shell ② Plug ③ Finger ④ Mounting block
V5 Siner-finger Module		• **Features and application scenarios:** The minimum finger spacing of the mounting module is only 10 mm, making it suitable for gripping tiny, thin and light workpieces. It can also be used in series (with screw accessory kit PK). However, compared with V4, each soft finger requires independent air supply. • **Fixing method:** It is fixed with chute nuts and used with sliding mounting plates. During installation, three degrees of freedom can be adjusted separately: forward/backward, left/right, and rotation. • **Air inlet:** The air connector can only be installed from one direction.	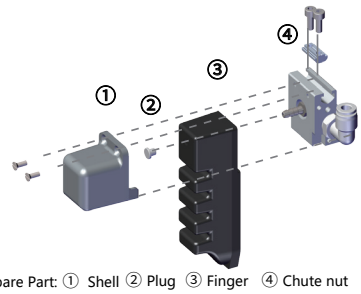 Spare Part: ① Shell ② Plug ③ Finger ④ Chute nut
V4 Siner-finger Module		• **Features and application scenarios:** Can be used in series (with screw accessory kit PK) to simplify air tubing arrangement. Suitable for scenarios where multiple soft fingers operate simultaneously with compact space, and the workpiece width is generally greater than 50 mm. • **Fixing method:** Fixed with chute nuts and used with sliding mounting plates. During installation, 3 degrees of freedom can be adjusted separately: forward/backward, left/right, and rotation. • **Air inlet:** Air connectors can be installed on either the left or right side of the module (optional).	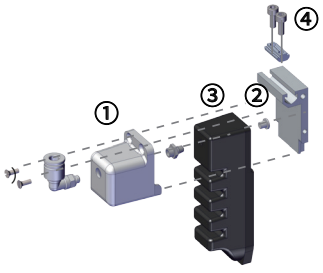 Spare Part: ① Shell ② Plug ③ Finger ④ Chute nut
V1 Compact two-finger Module		• **Features and application scenarios:** Two-finger module design with compact structure and small space occupation. Finger spacing and installation angle are non-adjustable. Suitable for gripping tiny, thin and light workpieces. • **Fixing method:** Fixable from three directions (optional). • **Air inlet:** Air connectors can be installed from three directions (optional).	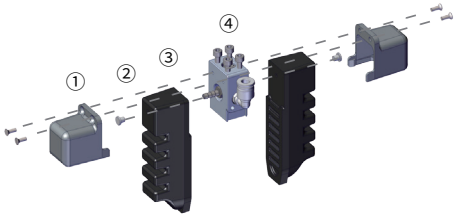 Spare Part: ① Shell ② Plug ③ Finger ④ Mounting block

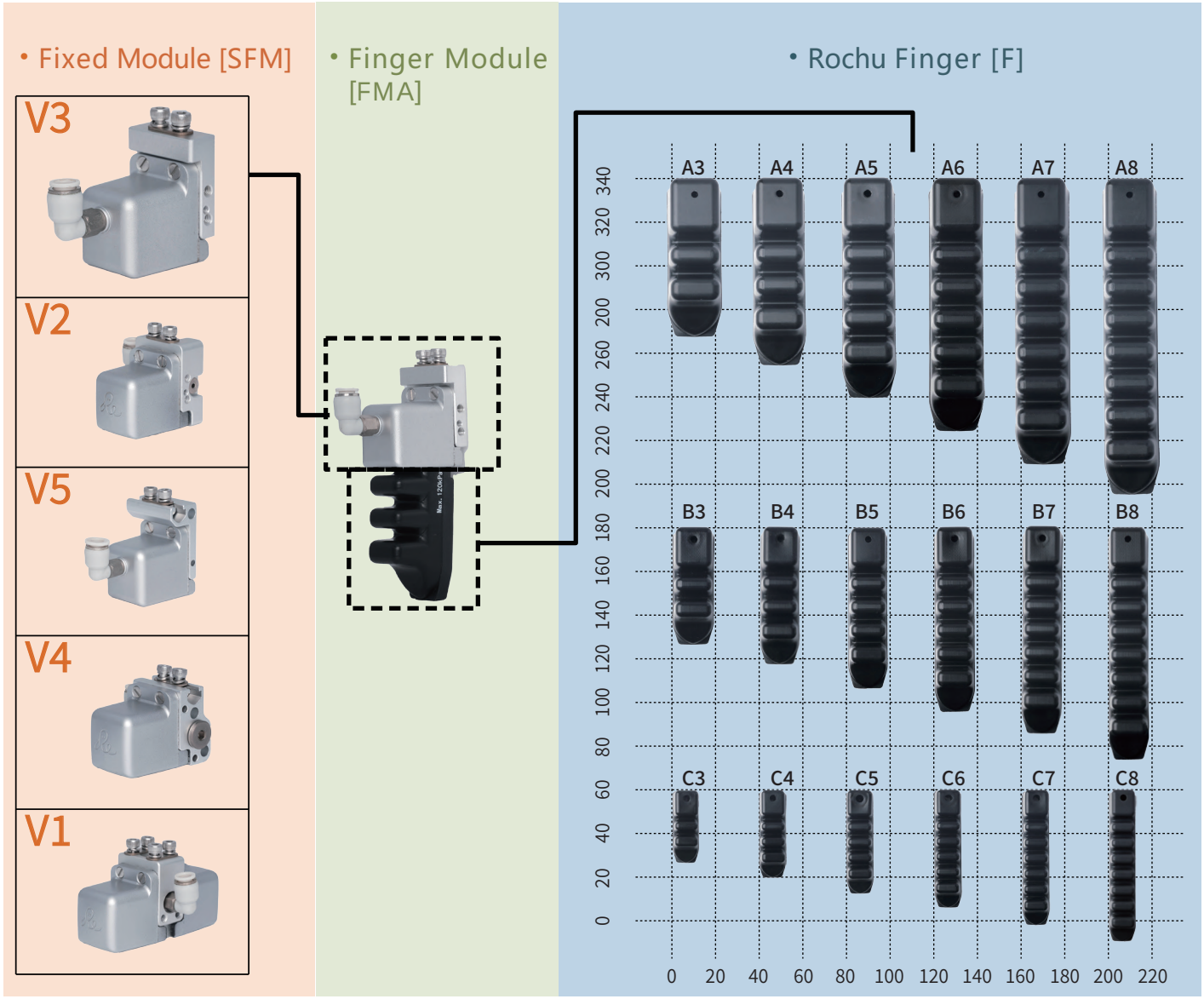

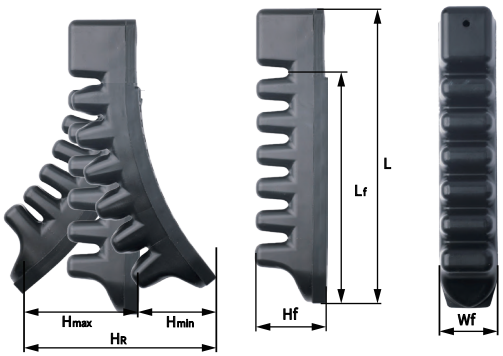

Finger Size	Fingertip Range HR [mm]	Negative pressure stroke Hmax [mm] [P]/[PAS]	Negative pressure stroke Hmax [mm] [H]/[HAS]	Positive pressure stroke** Hmin [mm]	Width Hf [mm]	Length Lf [mm]	Length L[mm]	Width Wf [mm]	Weight [g]	Safe Pressure [kPa] [P]/[PAS]	Safe Pressure [kPa] [H]/[HAS]
F-A3	16.5	8	7	8.5	28	41	69	24	33	120	300
F-A4	27	10	12	17		55	83		40		
F-A5	43.5	19	16	24.5		69	97		47		
F-A6	72	33	22	39		83	111		55		
F-A7	90	39	27	51		97	125		62		
F-A8	109	45	32	64		111	139		69		
F-B3	19	10	6	9	21	31	52	18	11	120	260
F-B4	29	13	10	16		42	62		16		
F-B5	40	16	14	24		52	73		20		
F-B6	53	23	17	30		63	83		24		
F-B7	75	30	21	45		73	94		28		
F-B8	98	37	25	61		84	104		32		
F-C3	10.5	5	1	5.5	14	21	34	12	4	120	220
F-C4	20	9	3	11		28	41		5		
F-C5	27	12	8	15		35	48		6		
F-C6	42	20	10	22		42	55		7		
F-C7	63	29	13	34		49	62		7		
F-C8	80	38	16	42		56	69		8		

*: Negative Pressure Range Hmax : Measured when real working pressure is -80kPa.

**: Positive Pressure Range Hmin: For Normal Material Finger [P]/[PAS], working pressure is 100kPa. For Strong Material Finger[H]/[HAS], working pressure is 250kPa.

FMA-A3 Finger Series

Model	Vacuum Stroke Hmax	Safe Pressure	Theoretical Load
FMA-A3V3/LS1[H]	7mm	300kPa*	470g**
FMA-A3V3/LS1[HLG]			
FMA-A3V3/LF1[H]			
FMA-A3V3/LS8[H]			
FMA-A3V3/AC1[H]			
FMA-A3V3/LS1[P]	8mm	120kPa*	350g**
FMA-A3V3/LS1[PLG]			
FMA-A3V3/LF1[P]			
FMA-A3V3/LS8[P]			
FMA-A3V3/LS8[PLG]			
FMA-A3V3/FS3[P]			
FMA-A3V3/U30[P]			
FMA-A3V3/AC1[P]			

Overall Dimensions

Mounting Method (Air Inlet/Fixing/Pose Adjustment)

V3

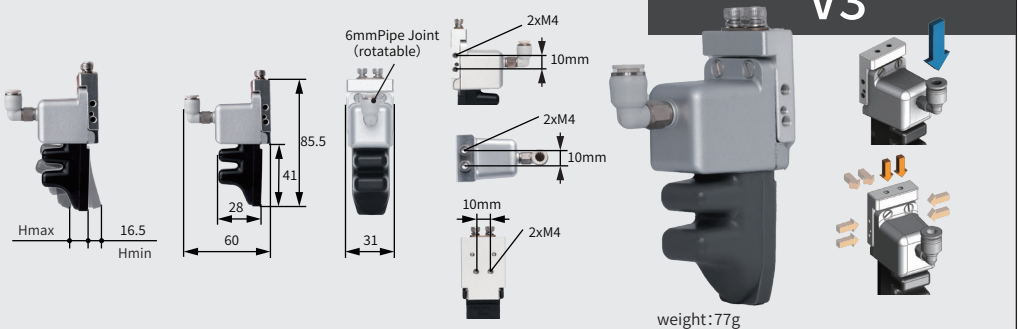

weight:77g

Model	Vacuum Stroke Hmax	Safe Pressure	Theoretical Load
FMA-A3V2/LS1[H]	7mm	300kPa*	470g**
FMA-A3V2/LS1[HLG]			
FMA-A3V2/LF1[H]			
FMA-A3V2/LS8[H]			
FMA-A3V2/AC1[H]			
FMA-A32/LS1[P]	8mm	120kPa*	350g**
FMA-A3V2/LS1[PLG]			
FMA-A3V2/LF1[P]			
FMA-A3V2/LS8[P]			
FMA-A3V2/LS8[PLG]			
FMA-A3V2/FS3[P]			
FMA-A3V2/U30[P]			
FMA-A3V2/AC1[P]			

V2

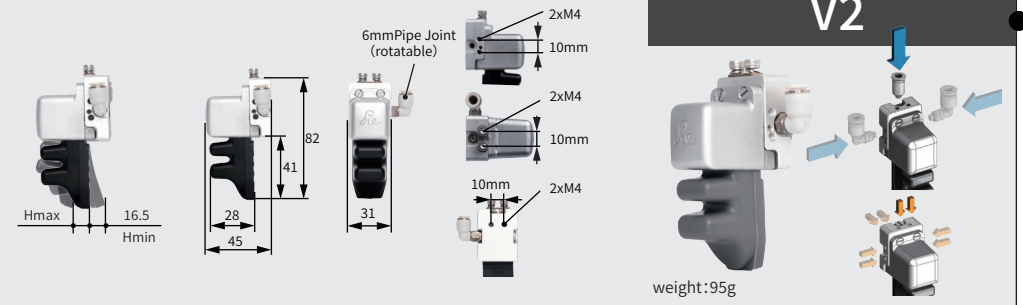

weight:95g

Model	Vacuum Stroke Hmax	Safe Pressure	Theoretical Load
FMA-A3V5/LS1[H]	7mm	300kPa*	470g**
FMA-A3V5/LS1[HLG]			
FMA-A3V5/N1[H]			
FMA-A3V5/LF1[H]			
FMA-A3V5/LS8[H]			
FMA-A3V5/FS3[H]			
FMA-A3V5/U32[H]			
FMA-A3V5/LS1[P]	8mm	120kPa*	350g**
FMA-A3V5/LF1[P]			
FMA-A3V5/LS8[P]			
FMA-A3V5/FS3[P]			
FMA-A3V5/U42[P]			

V5

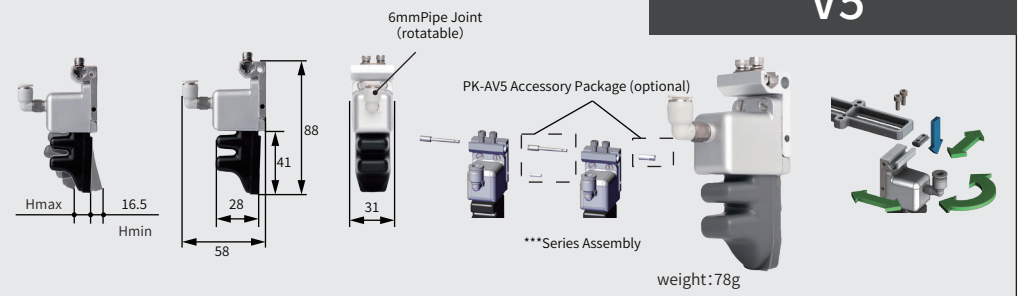

weight:78g

Model	Vacuum Stroke Hmax	Safe Pressure	Theoretical Load
FMA-A3V4/LS1[H]	7mm	300kPa*	470g**
FMA-A3V4/LS1[HLG]			
FMA-A3V4/N1[H]			
FMA-A3V4/LF1[H]			
FMA-A3V4/LS8[H]			
FMA-A3V4/FS3[H]			
FMA-A3V4/U32[H]			
FMA-A3V4/LS1[P]	8mm	120kPa*	350g**
FMA-A3V4/LF1[P]			
FMA-A3V4/LS8[P]			
FMA-A3V4/FS3[P]			
FMA-A3V4/U42[P]			

V4

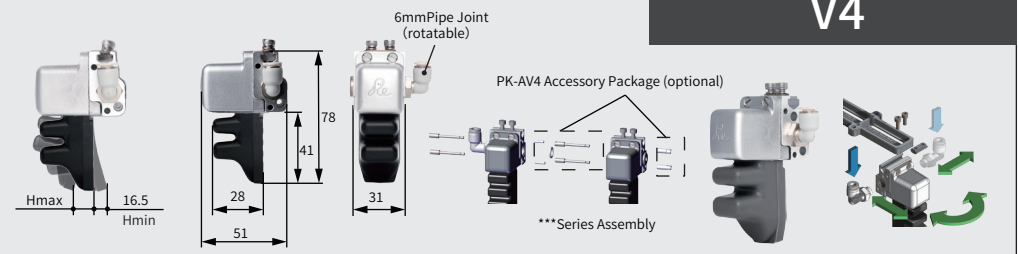

weight:100g

Model	Vacuum Stroke Hmax	Safe Pressure	Theoretical Load
FMA-A3V1/LS1[H]	14mm	300kPa*	940g**
FMA-A3V1/LS1[HLG]			
FMA-A3V1/N1[H]			
FMA-A3V1/LF1[H]			
FMA-A3V1/LS8[H]			
FMA-A3V1/FS3[H]			
FMA-A3V1/U32[H]			
FMA-A3V1/LS1[P]	16mm	120kPa*	700g**
FMA-A3V1/LF1[P]			
FMA-A3V1/LS8[P]			
FMA-A3V1/FS3[P]			
FMA-A3V1/U42[P]			

V1

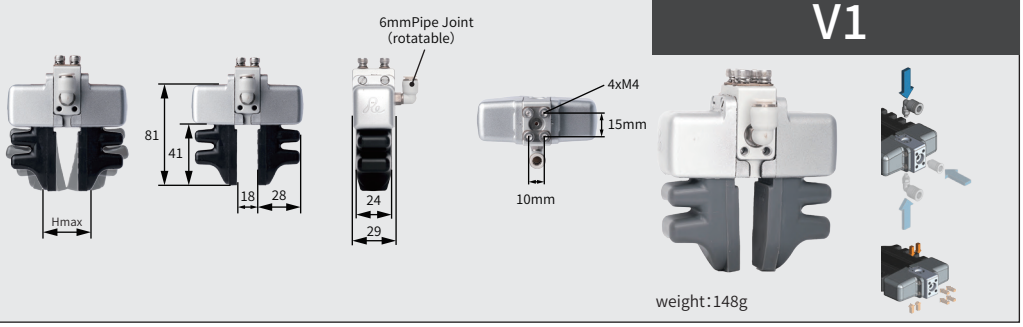

weight:148g

*Do not connect the flexible gripper directly to a high-pressure air supply. Overpressure operation will cause irreversible damage, sharply shorten service life or result in direct failure of the product. **The theoretical load is for selection reference only. The actual working load depends not only on the module model, but also on workpiece shape, wrapping performance during gripping, motion acceleration, surface friction coefficient and other factors. For actual gripping performance, please consult professional technical support for selection. ***Multiple flexible fingers can be combined in series to increase gripping force. The flexible finger module integrates air distribution function to enable seamless assembly between fingers. Only one air tube is required to drive multiple fingers simultaneously (shared air inlet), saving installation space. Assembling combined fingers requires accessory kit [PK] including bolts, nuts, sealing gaskets and pins. This kit is not included with flexible finger modules and must be purchased separately.

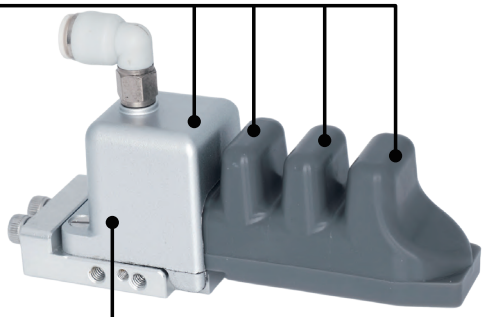

	Finger Width	Finger Joint	Mounting Method	/	Grip Texture	Material
FMA-	A	4	V3		LS1	[H]

[P]	Flexible Type	Food-grade Soft Silicone
[PAS]	Reinforced Type	Food-grade Soft Rubber, Anti-adhesive & Dust-free
[PLG]	Anti-static Flexible Type	Anti-static Soft Rubber for Electronics Industry
[PLGAS]	Anti-static Flexible Non-marking Type	Anti-static Soft Rubber for Electronics Industry, Anti-adhesive & Dust-free
[H]	Reinforced Type	Reinforced Food-grade Soft Rubber
[HAS]	Reinforced Non-marking Type	Reinforced Food-grade Soft Rubber, Anti-adhesive & Dust-free
[HLG]	Anti-static Reinforced Type	Anti-static Soft Rubber for Electronics Industry
[HLGAS]	Anti-static Reinforced Non-marking Type	Anti-static Soft Rubber for Electronics Industry, Anti-adhesive & Dust-free

Grip Texture		Features	Shape	Dimension Drawing
Standard Version	LS1	Flat head with horizontal stripes, good versatility. Suitable for most working conditions.		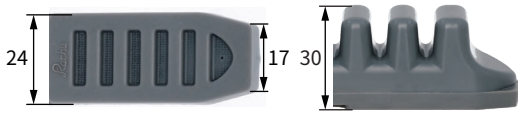
Extended Version	AC1	Flat head with flat base, suitable fordry and smooth workpieces as well as soft food	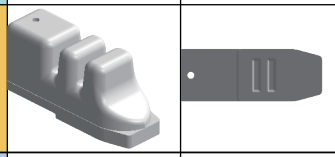	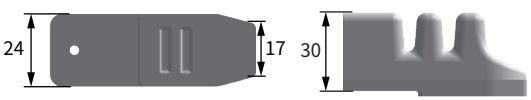
	LF1	Flat head & flat base, suitable for dry smooth workpieces and soft food.	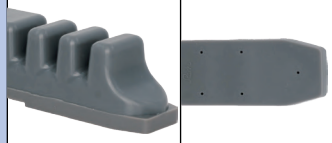	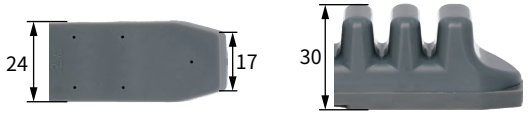
	LS8	Wedge-shaped tooth pattern, suitable for flat products such as PCBs, panels, automotive lamps, etc.		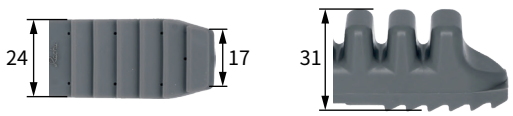
	FS3	Lip head with corrugated texture, suitable for soft textiles.		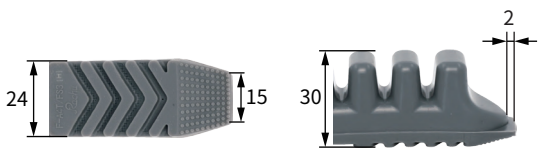
Special Version For more special models, please contact customer service.	U30	Widened fingertip design, suitable for soft and loose food items to prevent marks.	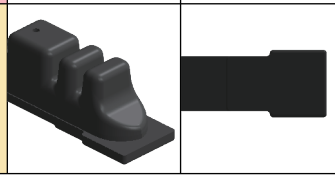	

FMA-A4Finger Series

Model	Vacuum Stroke Hmax	Safe Pressure	Theoretical Load
FMA-A4V3/LS1[H]	12mm	300kPa*	490g**
FMA-A4V3/LS1[HLG]			
FMA-A4V3/N1[H]			
FMA-A4V3/LF1[H]			
FMA-A4V3/LS8[H]			
FMA-A4V3/FS3[H]			
FMA-A4V3/U32[H]			
FMA-A4V3/LS1[P]	10mm	120kPa*	340g**
FMA-A4V3/LF1[P]			
FMA-A4V3/LS8[P]			
FMA-A4V3/FS3[P]			
FMA-A4V3/U42[P]			

Overall Dimensions

Mounting Method (Air Inlet/Fixing/Pose Adjustment)

V3

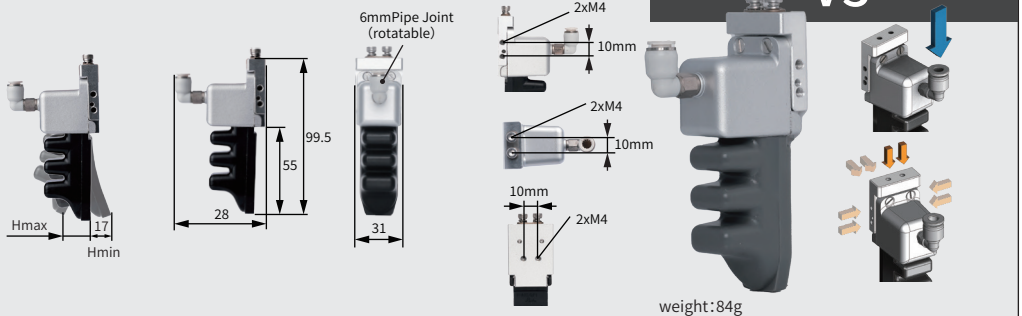

weight:84g

Model	Vacuum Stroke Hmax	Safe Pressure	Theoretical Load
FMA-A4V2/LS1[H]	12mm	300kPa*	490g**
FMA-A4V2/LS1[HLG]			
FMA-A4V2/N1[H]			
FMA-A4V2/LF1[H]			
FMA-A4V2/LS8[H]			
FMA-A4V2/FS3[H]			
FMA-A4V2/U32[H]			
FMA-A4V2/LS1[P]	10mm	120kPa*	340g**
FMA-A4V2/LF1[P]			
FMA-A4V2/LS8[P]			
FMA-A4V2/FS3[P]			
FMA-A4V2/U42[P]			

V2

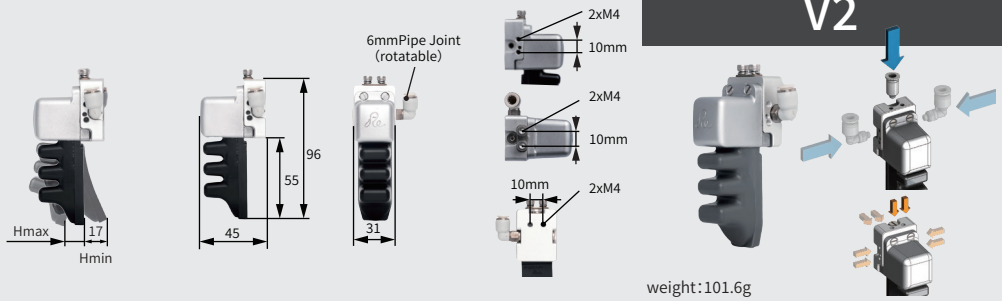

weight:101.6g

Model	Vacuum Stroke Hmax	Safe Pressure	Theoretical Load
FMA-A4V5/LS1[H]	12mm	300kPa*	490g**
FMA-A4V5/LS1[HLG]			
FMA-A4V5/N1[H]			
FMA-A4V5/LF1[H]			
FMA-A4V5/LS8[H]			
FMA-A4V5/FS3[H]			
FMA-A4V5/U32[H]			
FMA-A4V5/LS1[P]	10mm	120kPa*	340g**
FMA-A4V5/LF1[P]			
FMA-A4V5/LS8[P]			
FMA-A4V5/FS3[P]			
FMA-A4V5/U42[P]			

V5

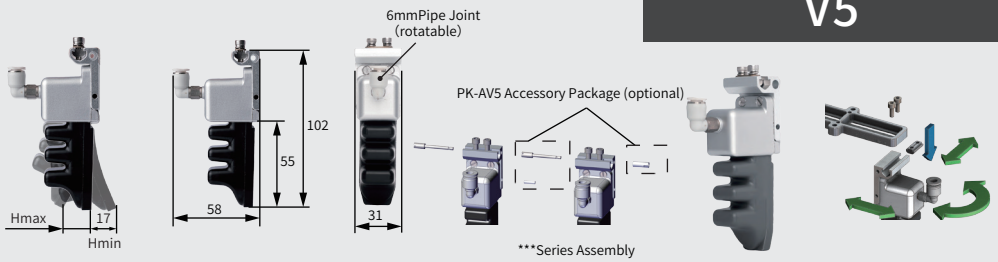

weight:84g

Model	Vacuum Stroke Hmax	Safe Pressure	Theoretical Load
FMA-A4V4/LS1[H]	12mm	300kPa*	490g**
FMA-A4V4/LS1[HLG]			
FMA-A4V4/N1[H]			
FMA-A4V4/LF1[H]			
FMA-A4V4/LS8[H]			
FMA-A4V4/FS3[H]			
FMA-A4V4/U32[H]			
FMA-A4V4/LS1[P]	10mm	120kPa*	340g**
FMA-A4V4/LF1[P]			
FMA-A4V4/LS8[P]			
FMA-A4V4/FS3[P]			
FMA-A4V4/U42[P]			

V4

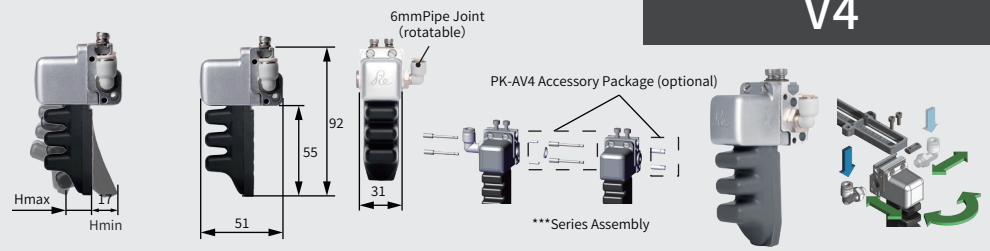

weight:106g

Model	Vacuum Stroke Hmax	Safe Pressure	Theoretical Load
FMA-A4V1/LS1[H]	42mm	300kPa*	980g**
FMA-A4V1/LS1[HLG]			
FMA-A4V1/N1[H]			
FMA-A4V1/LF1[H]			
FMA-A4V1/LS8[H]			
FMA-A4V1/FS3[H]			
FMA-A4V1/U32[H]			
FMA-A4V1/LS1[P]	38mm	120kPa*	680g**
FMA-A4V1/LF1[P]			
FMA-A4V1/LS8[P]			
FMA-A4V1/FS3[P]			
FMA-A4V1/U42[P]			

V1

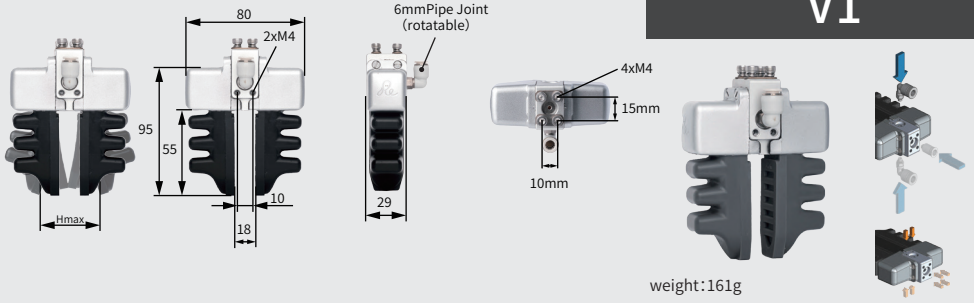

weight:161g

*Do not connect the flexible gripper directly to a high-pressure air supply. Overpressure operation will cause irreversible damage, sharply shorten service life or result in direct failure of the product. **The theoretical load is for selection reference only. The actual working load depends not only on the module model, but also on workpiece shape, wrapping performance during gripping, motion acceleration, surface friction coefficient and other factors. For actual gripping performance, please consult professional technical support for selection. ***Multiple flexible fingers can be combined in series to increase gripping force. The flexible finger module integrates air distribution function to enable seamless assembly between fingers. Only one air tube is required to drive multiple fingers simultaneously (shared air inlet), saving installation space. Assembling combined fingers requires accessory kit [PK] including bolts, nuts, sealing gaskets and pins. This kit is not included with flexible finger modules and must be purchased separately.

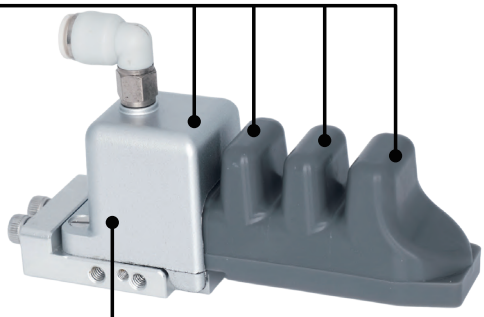

FMA-	Finger Width	Finger Joint	Mounting Method	/	Grip Texture	Material
	A	4	V3		LS1	[H]

[P]	Flexible Type	Food-grade Soft Silicone
[PAS]	Reinforced Type	Food-grade Soft Rubber, Anti-adhesive & Dust-free
[PLG]	Anti-static Flexible Type	Anti-static Soft Rubber for Electronics Industry
[PLGAS]	Anti-static Flexible Non-marking Type	Anti-static Soft Rubber for Electronics Industry, Anti-adhesive & Dust-free
[H]	Reinforced Type	Reinforced Food-grade Soft Rubber
[HAS]	Reinforced Non-marking Type	Reinforced Food-grade Soft Rubber, Anti-adhesive & Dust-free
[HLG]	Anti-static Reinforced Type	Anti-static Soft Rubber for Electronics Industry
[HLGAS]	Anti-static Reinforced Non-marking Type	Anti-static Soft Rubber for Electronics Industry, Anti-adhesive & Dust-free

Grip Texture		Features	Shape	Dimension Drawing
Standard Version	LS1	Flat head with horizontal stripes, good versatility. Suitable for most working conditions.		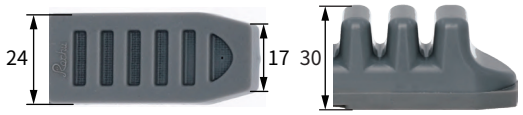
Extended Version	N1	Reserved screw mounting holes, expandable and customizable finger base	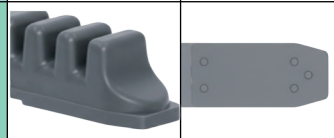	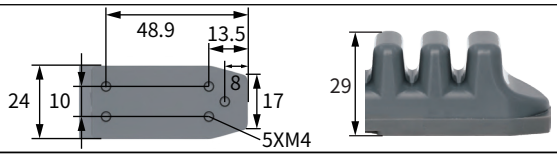
	LF1	Flat head & flat base, suitable for dry smooth workpieces and soft food.		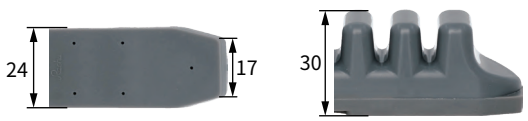
	LS8	Wedge-shaped tooth pattern, suitable for flat products such as PCBs, panels, automotive lamps, etc.		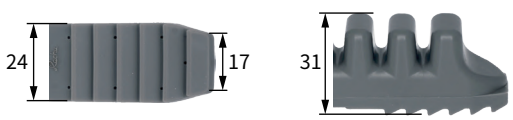
	FS3	Lip head with corrugated texture, suitable for soft textiles.		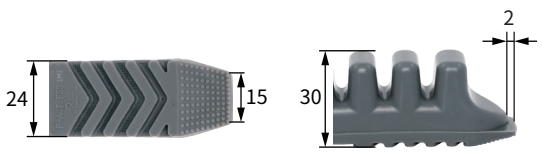
Special Version For more special models, please contact customer service.	U42	Widened fingertip design, suitable for soft food, non-marking.		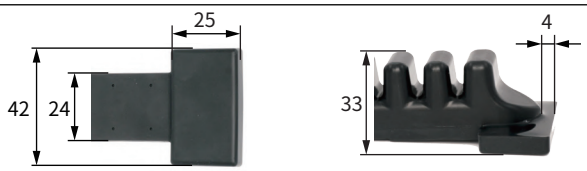
	U32	Curved contoured fingertip design enables enveloping gripping of cylindrical products.	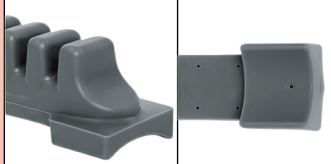	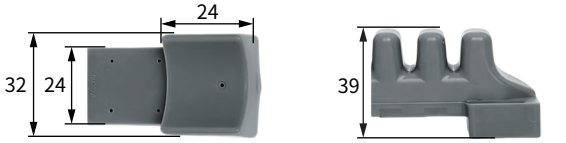

FMA-A5 Finger Series

Model	Vacuum Stroke Hmax	Safe Pressure	Theoretical Load
FMA-A3V3/LS1[H]	16mm	300kPa*	400g**
FMA-A3V3/LS1[HLG]			
FMA-A3V3/LF1[H]			
FMA-A3V3/LS8[H]			
FMA-A3V3/LS8[HLG]			
FMA-A3V3/FS3[H]			
FMA-A3V3/LS1[P]	19mm	120kPa*	280g**
FMA-A3V3/LF1[P]			
FMA-A3V3/LS8[P]			
FMA-A3V3/FS3[P]			

Overall Dimensions

Mounting Method (Air Inlet/Fixing/Pose Adjustment)

V3

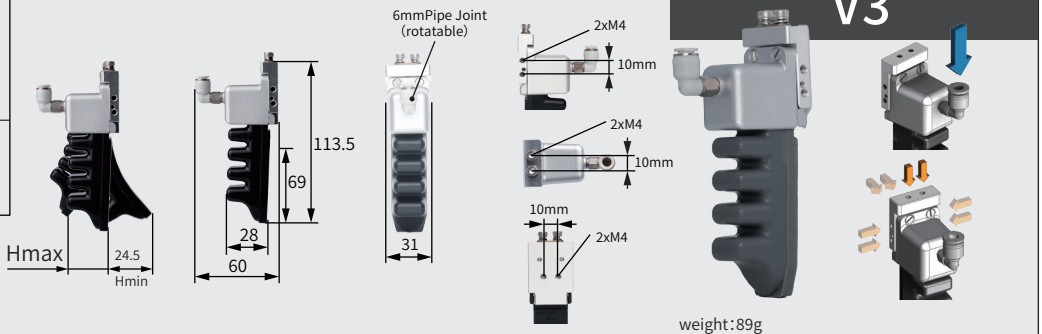

weight:89g

Model	Vacuum Stroke Hmax	Safe Pressure	Theoretical Load
FMA-A3V2/LS1[H]	16mm	300kPa*	400g**
FMA-A3V2/LS1[HLG]			
FMA-A3V2/LF1[H]			
FMA-A3V2/LS8[H]			
FMA-A3V2/LS8[HLG]			
FMA-A3V2/FS3[H]			
FMA-A3V2/LS1[P]	19mm	120kPa*	280g**
FMA-A3V2/LF1[P]			
FMA-A3V2/LS8[P]			
FMA-A3V2/FS3[P]			

V2

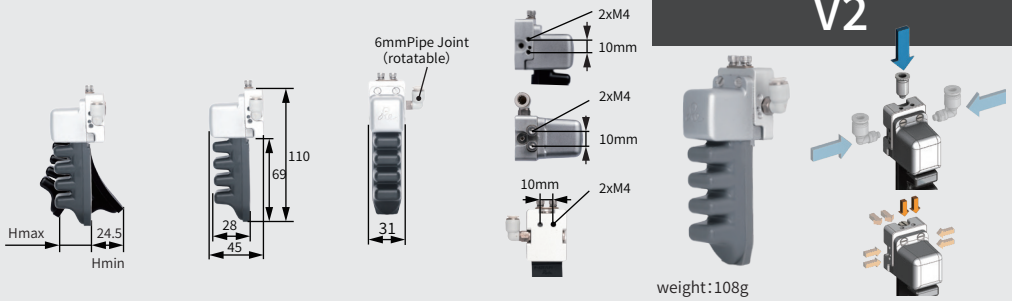

weight:108g

Model	Vacuum Stroke Hmax	Safe Pressure	Theoretical Load
FMA-A3V2/LS1[H]	16mm	300kPa*	400g**
FMA-A3V2/LS1[HLG]			
FMA-A3V2/LF1[H]			
FMA-A3V2/LS8[H]			
FMA-A3V2/LS8[HLG]			
FMA-A3V2/FS3[H]			
FMA-A3V2/LS1[P]	19mm	120kPa*	280g**
FMA-A3V2/LF1[P]			
FMA-A3V2/LS8[P]			
FMA-A3V2/FS3[P]			

V5

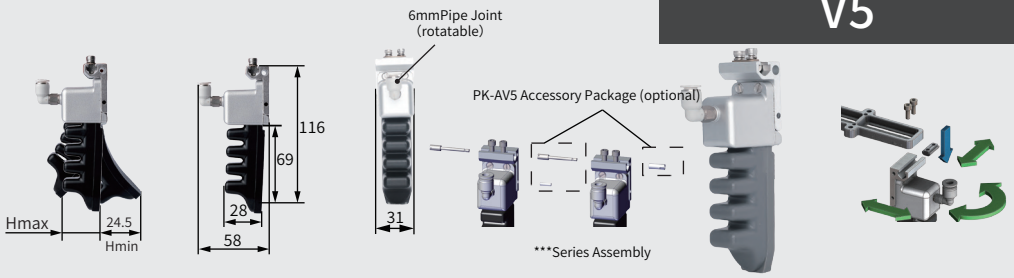

weight:89g

Model	Vacuum Stroke Hmax	Safe Pressure	Theoretical Load
FMA-A3V2/LS1[H]	16mm	300kPa*	400g**
FMA-A3V2/LS1[HLG]			
FMA-A3V2/LF1[H]			
FMA-A3V2/LS8[H]			
FMA-A3V2/LS8[HLG]			
FMA-A3V2/FS3[H]			
FMA-A3V2/LS1[P]	19mm	120kPa*	280g**
FMA-A3V2/LF1[P]			
FMA-A3V2/LS8[P]			
FMA-A3V2/FS3[P]			

V4

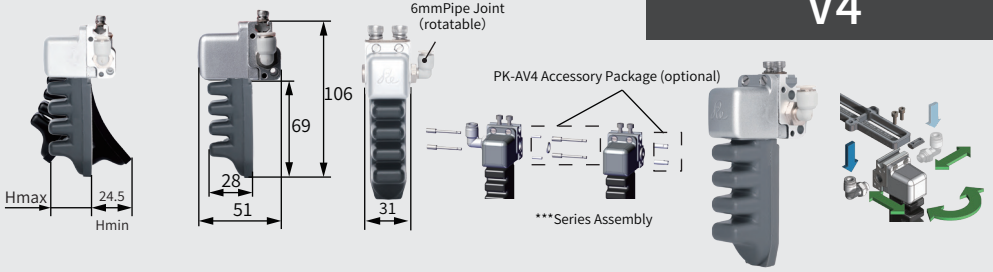

weight:108g

Model	Vacuum Stroke Hmax	Safe Pressure	Theoretical Load
FMA-A3V2/LS1[H]	32mm	300kPa*	800g**
FMA-A3V2/LS1[HLG]			
FMA-A3V2/LF1[H]			
FMA-A3V2/LS8[H]			
FMA-A3V2/LS8[HLG]			
FMA-A3V2/FS3[H]			
FMA-A3V2/LS1[P]	38mm	120kPa*	560g**
FMA-A3V2/LF1[P]			
FMA-A3V2/LS8[P]			
FMA-A3V2/FS3[P]			

V1

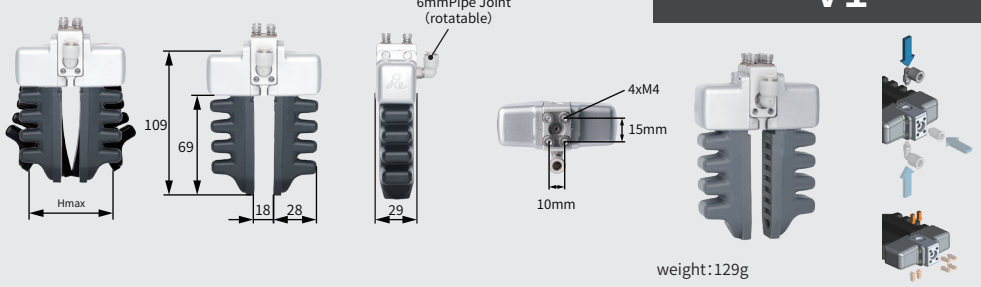

weight:129g

*Do not connect the flexible gripper directly to a high-pressure air supply. Overpressure operation will cause irreversible damage, sharply shorten service life or result in direct failure of the product. **The theoretical load is for selection reference only. The actual working load depends not only on the module model, but also on workpiece shape, wrapping performance during gripping, motion acceleration, surface friction coefficient and other factors. For actual gripping performance, please consult professional technical support for selection. ***Multiple flexible fingers can be combined in series to increase gripping force. The flexible finger module integrates air distribution function to enable seamless assembly between fingers. Only one air tube is required to drive multiple fingers simultaneously (shared air inlet), saving installation space. Assembling combined fingers requires accessory kit [PK] including bolts, nuts, sealing gaskets and pins. This kit is not included with flexible finger modules and must be purchased separately.

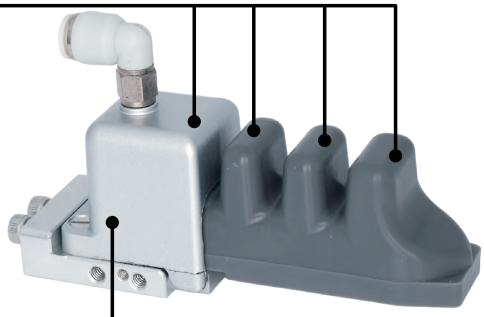

[P]	Flexible Type	Food-grade Soft Silicone
[PAS]	Reinforced Type	Food-grade Soft Rubber, Anti-adhesive & Dust-free
[PLG]	Anti-static Flexible Type	Anti-static Soft Rubber for Electronics Industry
[PLGAS]	Anti-static Flexible Non-marking Type	Anti-static Soft Rubber for Electronics Industry, Anti-adhesive & Dust-free
[H]	Reinforced Type	Reinforced Food-grade Soft Rubber
[HAS]	Reinforced Non-marking Type	Reinforced Food-grade Soft Rubber, Anti-adhesive & Dust-free
[HLG]	Anti-static Reinforced Type	Anti-static Soft Rubber for Electronics Industry
[HLGAS]	Anti-static Reinforced Non-marking Type	Anti-static Soft Rubber for Electronics Industry, Anti-adhesive & Dust-free

FMA-	Finger Width	Finger Joint	Mounting Method	/	Grip Texture	Material
	A	4	V3		LS1	[H]

Grip Texture		Features	Shape	Dimension Drawing
Standard Version	LS1	Flat head with horizontal stripes, good versatility. Suitable for most working conditions.		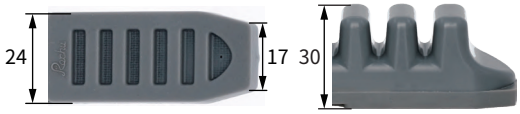
Extended Version	LF1	Flat head & flat base, suitable for dry smooth workpieces and soft food.	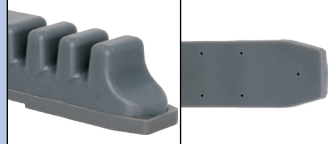	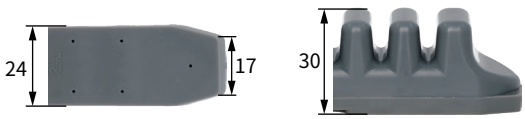
	LS8	Flat head & flat base, suitable for dry smooth workpieces and soft food.		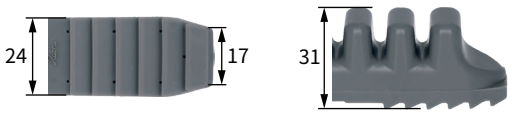
	FS3	Lip head with corrugated texture, suitable for soft textiles.		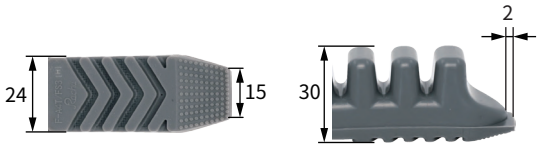

FMA-A6 Finger Series

V3

Model	Vacuum Stroke Hmax	Safe Pressure	Theoretical Load
FMA-A3V3/LS1[H]	22mm	300kPa*	415g**
FMA-A3V3/LF1[H]			
FMA-A3V3/LS8[H]			
FMA-A3V3/FS3[H]			
FMA-A3V3/LS1[P]	33mm	120kPa*	230g**
FMA-A3V3/LF1[P]			
FMA-A3V3/LS8[P]			
FMA-A3V3/FS3[P]			

Overall Dimensions

Mounting Method (Air Inlet/Fixing/Pose Adjustment)

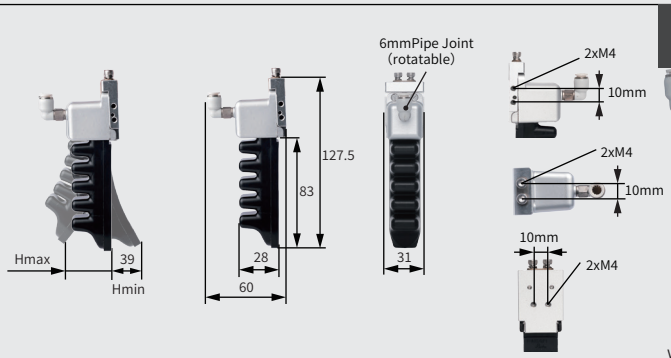

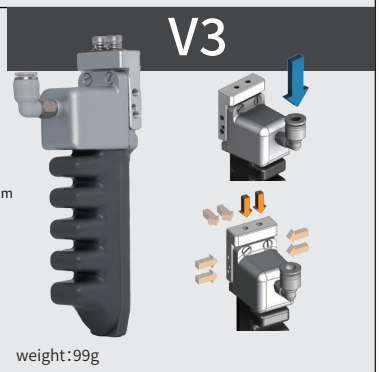

weight:99g

V2

Model	Vacuum Stroke Hmax	Safe Pressure	Theoretical Load
FMA-A3V3/LS1[H]	22mm	300kPa*	415g**
FMA-A3V3/LF1[H]			
FMA-A3V3/LS8[H]			
FMA-A3V3/FS3[H]			
FMA-A3V3/LS1[P]	33mm	120kPa*	230g**
FMA-A3V3/LF1[P]			
FMA-A3V3/LS8[P]			
FMA-A3V3/FS3[P]			

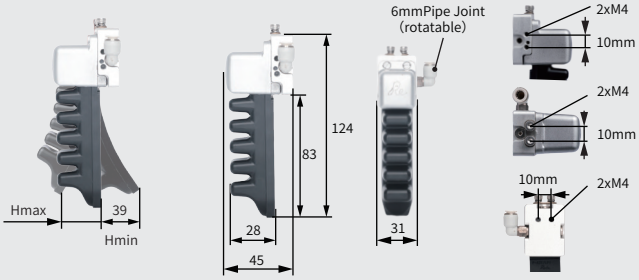

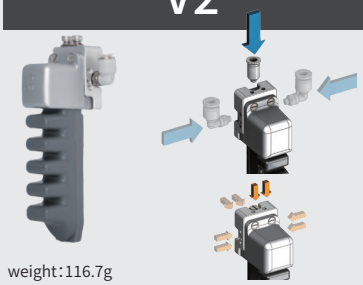

weight:116.7g

V5

Model	Vacuum Stroke Hmax	Safe Pressure	Theoretical Load
FMA-A3V3/LS1[H]	22mm	300kPa*	415g**
FMA-A3V3/LF1[H]			
FMA-A3V3/LS8[H]			
FMA-A3V3/FS3[H]			
FMA-A3V3/LS1[P]	33mm	120kPa*	230g**
FMA-A3V3/LF1[P]			
FMA-A3V3/LS8[P]			
FMA-A3V3/FS3[P]			

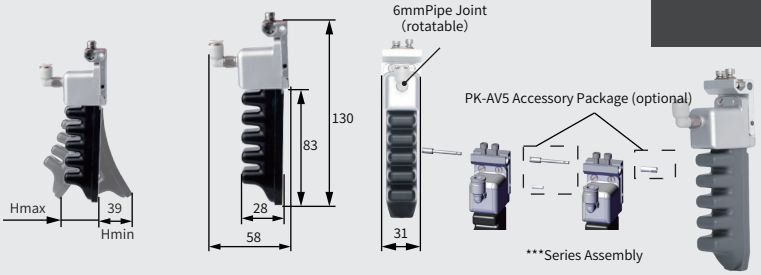

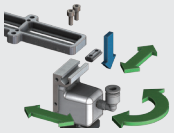

weight:91g

V4

Model	Vacuum Stroke Hmax	Safe Pressure	Theoretical Load
FMA-A3V3/LS1[H]	22mm	300kPa*	415g**
FMA-A3V3/LF1[H]			
FMA-A3V3/LS8[H]			
FMA-A3V3/FS3[H]			
FMA-A3V3/LS1[P]	33mm	120kPa*	230g**
FMA-A3V3/LF1[P]			
FMA-A3V3/LS8[P]			
FMA-A3V3/FS3[P]			

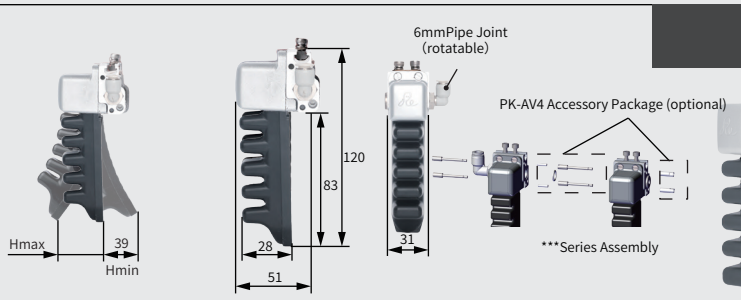

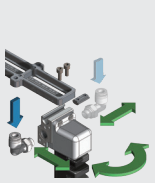

weight:121g

V1

Model	Vacuum Stroke Hmax	Safe Pressure	Theoretical Load
FMA-A3V3/LS1[H]	44mm	300kPa*	760g**
FMA-A3V3/LF1[H]			
FMA-A3V3/LS8[H]			
FMA-A3V3/FS3[H]			
FMA-A3V3/LS1[P]	66mm	120kPa*	440g**
FMA-A3V3/LF1[P]			
FMA-A3V3/LS8[P]			
FMA-A3V3/FS3[P]			

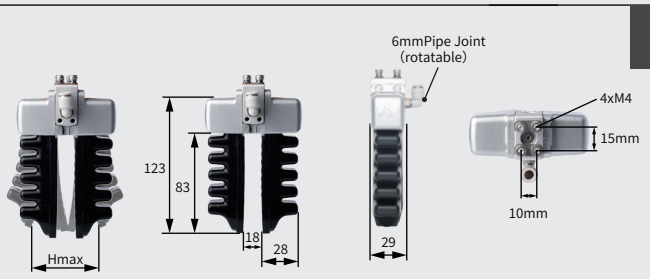

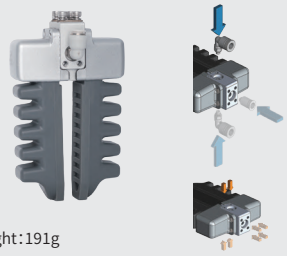

weight:191g

*Do not connect the flexible gripper directly to a high-pressure air supply. Overpressure operation will cause irreversible damage, sharply shorten service life or result in direct failure of the product. **The theoretical load is for selection reference only. The actual working load depends not only on the module model, but also on workpiece shape, wrapping performance during gripping, motion acceleration, surface friction coefficient and other factors. For actual gripping performance, please consult professional technical support for selection. ***Multiple flexible fingers can be combined in series to increase gripping force. The flexible finger module integrates air distribution function to enable seamless assembly between fingers. Only one air tube is required to drive multiple fingers simultaneously (shared air inlet), saving installation space. Assembling combined fingers requires accessory kit [PK] including bolts, nuts, sealing gaskets and pins. This kit is not included with flexible finger modules and must be purchased separately.

Number of Joints 1 2 3 4

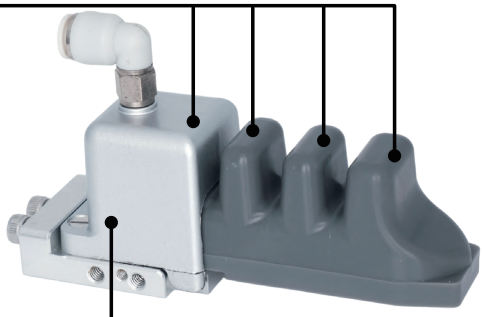

[P]	Flexible Type	Food-grade Soft Silicone
[PAS]	Reinforced Type	Food-grade Soft Rubber, Anti-adhesive & Dust-free
[PLG]	Anti-static Flexible Type	Anti-static Soft Rubber for Electronics Industry
[PLGAS]	Anti-static Flexible Non-marking Type	Anti-static Soft Rubber for Electronics Industry, Anti-adhesive & Dust-free
[H]	Reinforced Type	Reinforced Food-grade Soft Rubber
[HAS]	Reinforced Non-marking Type	Reinforced Food-grade Soft Rubber, Anti-adhesive & Dust-free
[HLG]	Anti-static Reinforced Type	Anti-static Soft Rubber for Electronics Industry
[HLGAS]	Anti-static Reinforced Non-marking Type	Anti-static Soft Rubber for Electronics Industry, Anti-adhesive & Dust-free

FMA-	Finger Width	Finger Joint	Mounting Method	/	Grip Texture	Material
	A	4	V3		LS1	[H]

Grip Texture		Features	Shape	Dimension Drawing
Standard Version	LS1	Flat head with horizontal stripes, good versatility. Suitable for most working conditions.		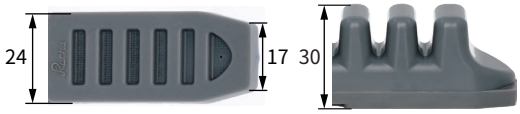
Extended Version	LF1	Flat head & flat base, suitable for dry smooth workpieces and soft food.	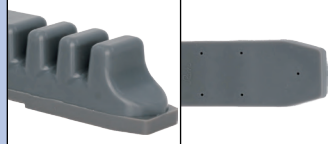	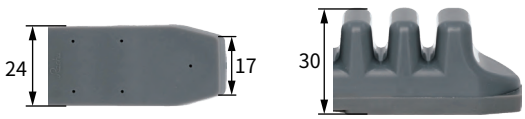
	LS8	Wedge-shaped tooth pattern, suitable for flat products such as PCBs, panels, automotive lamps, etc.		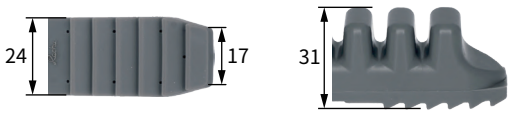
	FS3	Lip head with corrugated texture, suitable for soft textiles.		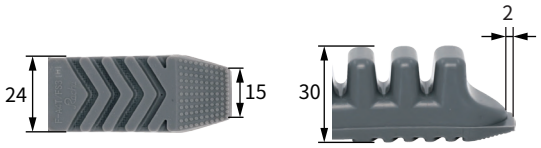

FMA-A7 Finger Series

Model	Vacuum Stroke Hmax	Safe Pressure	Theoretical Load
FMA-A7V3/LS1[H]	27mm	300kPa*	380g**
FMA-A7V3/LS1[P]	39mm	120kPa*	220g**
FMA-A7V3/LS8[P]			
FMA-A7V3/FS3[P]			

Overall Dimensions

Mounting Method (Air Inlet/Fixing/Pose Adjustment)

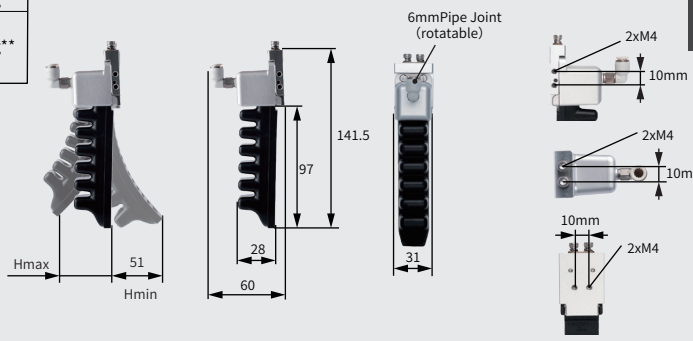

V3

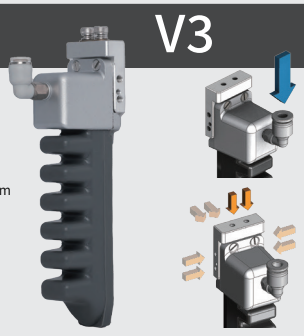

weight:105g

Model	Vacuum Stroke Hmax	Safe Pressure	Theoretical Load
FMA-A7V2/LS1[H]	27mm	300kPa*	380g**
FMA-A7V2/LS1[P]	39mm	120kPa*	220g**
FMA-A7V2/LS8[P]			
FMA-A7V2/FS3[P]			

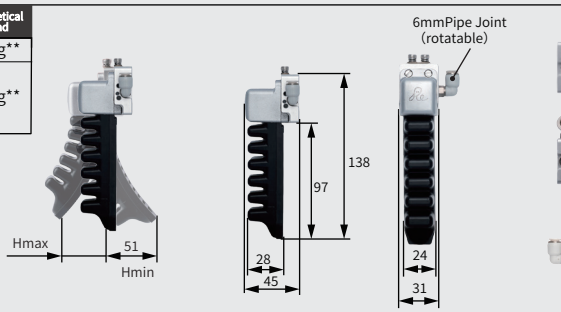

V2

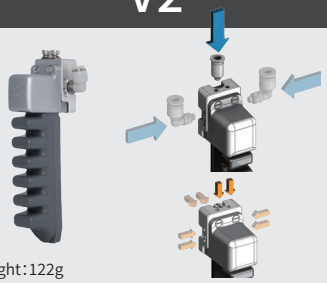

weight:122g

Model	Vacuum Stroke Hmax	Safe Pressure	Theoretical Load
FMA-A7V5/LS1[H]	27mm	300kPa*	380g**
FMA-A7V5/LS1[P]	39mm	120kPa*	220g**
FMA-A7V5/LS8[P]			
FMA-A7V5/FS3[P]			

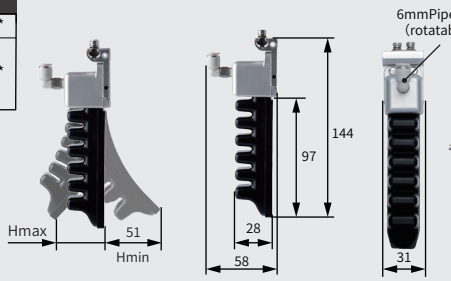

V5

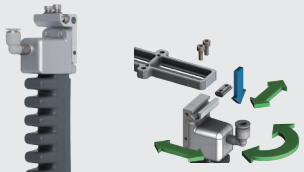

weight:105g

Model	Vacuum Stroke Hmax	Safe Pressure	Theoretical Load
FMA-A7V4/LS1[H]	27mm	300kPa*	380g**
FMA-A7V4/LS1[P]	39mm	120kPa*	220g**
FMA-A7V4/LS8[P]			
FMA-A7V4/FS3[P]			

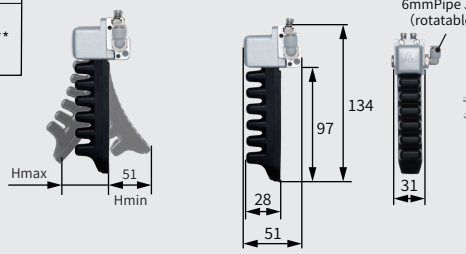

V4

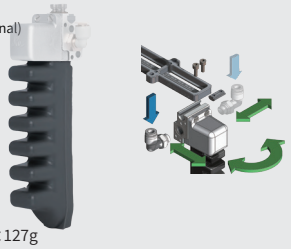

weight:127g

Model	Vacuum Stroke Hmax	Safe Pressure	Theoretical Load
FMA-A7V1/LS1[H]	54mm	300kPa*	760g**
FMA-A7V1/LS1[P]	78mm	120kPa*	440g**
FMA-A7V1/LS8[P]			
FMA-A7V1/FS3[P]			

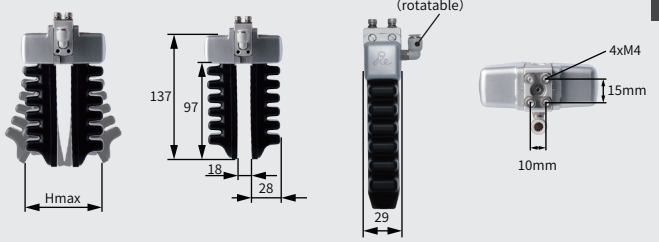

V1

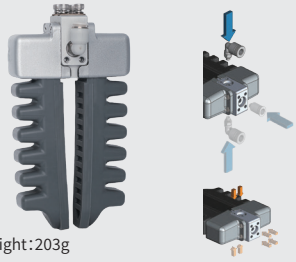

weight:203g

*Do not connect the flexible gripper directly to a high-pressure air supply. Overpressure operation will cause irreversible damage, sharply shorten service life or result in direct failure of the product. **The theoretical load is for selection reference only. The actual working load depends not only on the module model, but also on workpiece shape, wrapping performance during gripping, motion acceleration, surface friction coefficient and other factors. For actual gripping performance, please consult professional technical support for selection. ***Multiple flexible fingers can be combined in series to increase gripping force. The flexible finger module integrates air distribution function to enable seamless assembly between fingers. Only one air tube is required to drive multiple fingers simultaneously (shared air inlet), saving installation space. Assembling combined fingers requires accessory kit [PK] including bolts, nuts, sealing gaskets and pins. This kit is not included with flexible finger modules and must be purchased separately.

Number of Joints 1 2 3 4

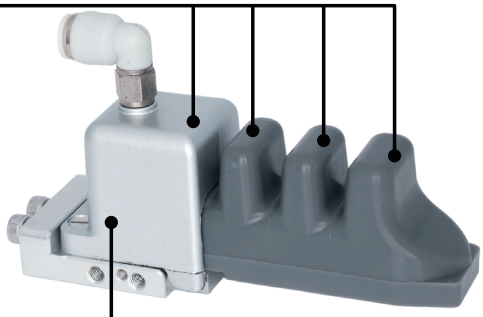

Finger Width	Finger Joint	Mounting Method		Grip Texture	Material
FMA- A	4	V3	/	LS1	[H]

[P]	Flexible Type	Food-grade Soft Silicone
[PAS]	Reinforced Type	Food-grade Soft Rubber, Anti-adhesive & Dust-free
[PLG]	Anti-static Flexible Type	Anti-static Soft Rubber for Electronics Industry
[PLGAS]	Anti-static Flexible Non-marking Type	Anti-static Soft Rubber for Electronics Industry, Anti-adhesive & Dust-free
[H]	Reinforced Type	Reinforced Food-grade Soft Rubber
[HAS]	Reinforced Non-marking Type	Reinforced Food-grade Soft Rubber, Anti-adhesive & Dust-free
[HLG]	Anti-static Reinforced Type	Anti-static Soft Rubber for Electronics Industry
[HLGAS]	Anti-static Reinforced Non-marking Type	Anti-static Soft Rubber for Electronics Industry, Anti-adhesive & Dust-free

Grip Texture		Features	Shape	Dimension Drawing
Standard Version	LS1	Flat head with horizontal stripes, good versatility. Suitable for most working conditions.		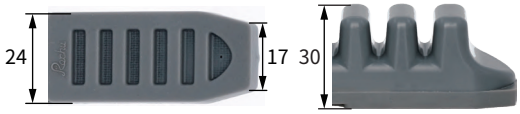
Extended Version	LS8	Wedge-shaped tooth pattern, suitable for flat products such as PCBs, panels, automotive lamps, etc.		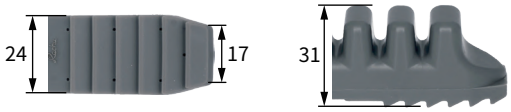
	FS3	Lip head with corrugated texture, suitable for soft textiles.		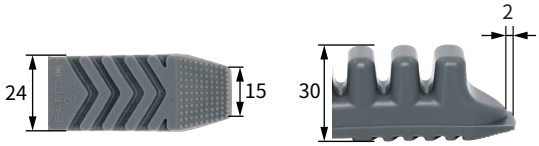

FMA-A8 Finger Series

Model	Vacuum Stroke Hmax	Safe Pressure	Theoretical Load
FMA-A8V3/LS1[H]	32mm	300kPa*	280g**
FMA-A8V3/LS8[H]			
FMA-A8V3/LS1[P]	45mm	120kPa*	210g**
FMA-A8V3/LS1[PLG]			

Overall Dimensions

Mounting Method (Air Inlet/Fixing/Pose Adjustment)

V3

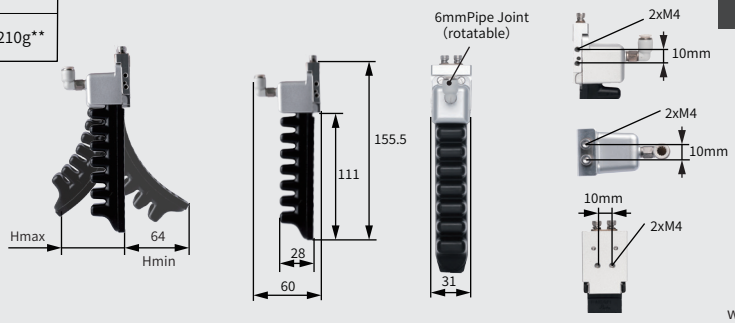

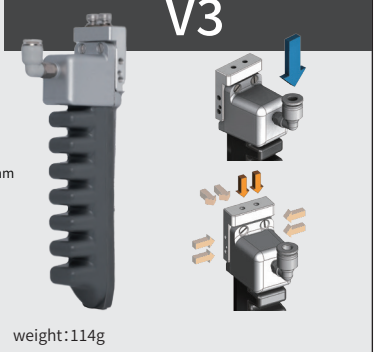

weight:114g

Model	Vacuum Stroke Hmax	Safe Pressure	Theoretical Load
FMA-A8V2/LS1[H]	32mm	300kPa*	280g**
FMA-A8V2/LS8[H]			
FMA-A8V2/LS1[P]	45mm	120kPa*	210g**
FMA-A8V2/LS1[PLG]			

V2

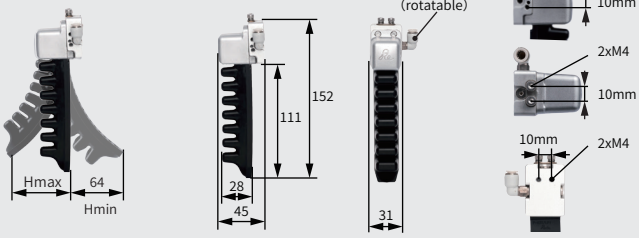

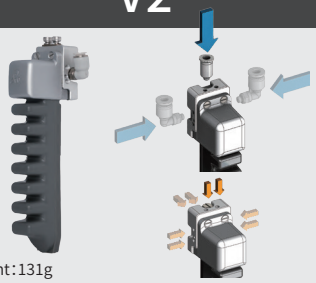

weight:131g

Model	Vacuum Stroke Hmax	Safe Pressure	Theoretical Load
FMA-A8V5/LS1[H]	32mm	300kPa*	280g**
FMA-A8V5/LS8[H]			
FMA-A8V5/LS1[P]	45mm	120kPa*	210g**
FMA-A8V5/LS1[PLG]			

V5

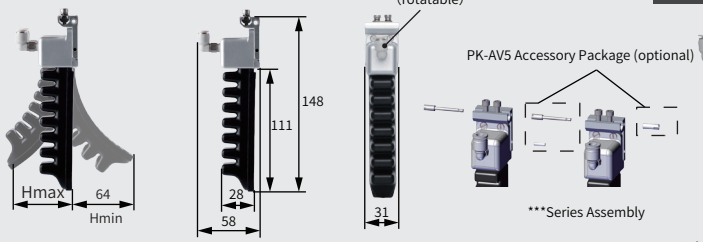

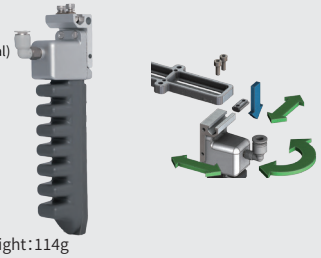

weight:114g

Model	Vacuum Stroke Hmax	Safe Pressure	Theoretical Load
FMA-A8V4/LS1[H]	32mm	300kPa*	280g**
FMA-A8V4/LS8[H]			
FMA-A8V4/LS1[P]	45mm	120kPa*	210g**
FMA-A8V4/LS1[PLG]			

V4

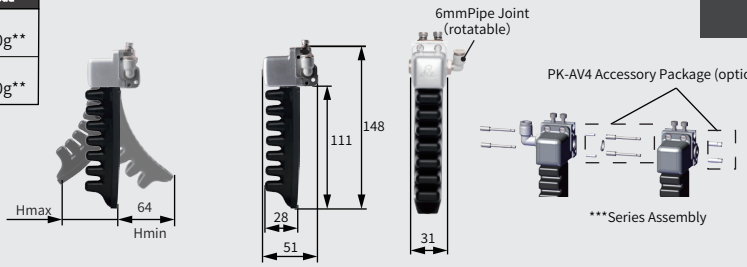

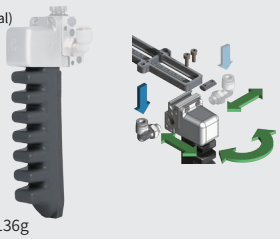

weight:136g

Model	Vacuum Stroke Hmax	Safe Pressure	Theoretical Load
FMA-A8V1/LS1[H]	64mm	300kPa*	560g**
FMA-A8V1/LS8[H]			
FMA-A8V1/LS1[P]	90mm	120kPa*	420g**
FMA-A8V1/LS1[PLG]			

V1

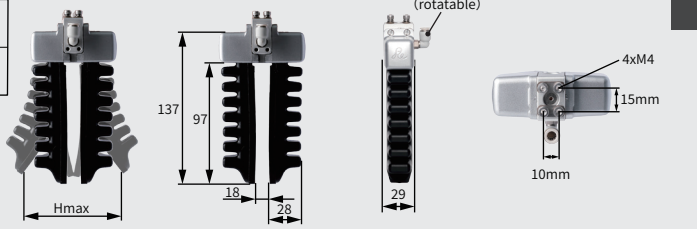

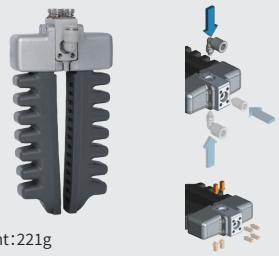

weight:221g

*Do not connect the flexible gripper directly to a high-pressure air supply. Overpressure operation will cause irreversible damage, sharply shorten service life or result in direct failure of the product. **The theoretical load is for selection reference only. The actual working load depends not only on the module model, but also on workpiece shape, wrapping performance during gripping, motion acceleration, surface friction coefficient and other factors. For actual gripping performance, please consult professional technical support for selection. ***Multiple flexible fingers can be combined in series to increase gripping force. The flexible finger module integrates air distribution function to enable seamless assembly between fingers. Only one air tube is required to drive multiple fingers simultaneously (shared air inlet), saving installation space. Assembling combined fingers requires accessory kit [PK] including bolts, nuts, sealing gaskets and pins. This kit is not included with flexible finger modules and must be purchased separately.

Number of Joints 1 2 3 4

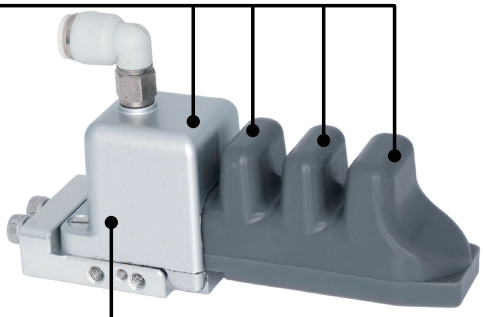

FMA-

Finger Width	Finger Joint	Mounting Method	/	Grip Texture	Material
A	4	V3		LS1	[H]

[P]	Flexible Type	Food-grade Soft Silicone
[PAS]	Reinforced Type	Food-grade Soft Rubber, Anti-adhesive & Dust-free
[PLG]	Anti-static Flexible Type	Anti-static Soft Rubber for Electronics Industry
[PLGAS]	Anti-static Flexible Non-marking Type	Anti-static Soft Rubber for Electronics Industry, Anti-adhesive & Dust-free
[H]	Reinforced Type	Reinforced Food-grade Soft Rubber
[HAS]	Reinforced Non-marking Type	Reinforced Food-grade Soft Rubber, Anti-adhesive & Dust-free
[HLG]	Anti-static Reinforced Type	Anti-static Soft Rubber for Electronics Industry
[HLGAS]	Anti-static Reinforced Non-marking Type	Anti-static Soft Rubber for Electronics Industry, Anti-adhesive & Dust-free

Grip Texture		Features	Shape	Dimension Drawing
Standard Version	LS1	Flat head with horizontal stripes, good versatility. Suitable for most working conditions.		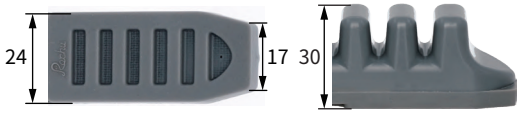
Extended Version	LS8	Wedge-shaped tooth pattern, suitable for flat products such as PCBs, panels, automotive lamps, etc.		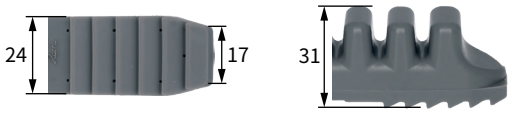

FMA-**B3 Finger Series**

Model	Vacuum Stroke Hmax	Safe Pressure	Theoretical Load
FMA-B3V3/LS1[H]	6mm	260kPa*	240g**
FMA-B3V3/LS8[H]			
FMA-B3V3/LS1[P]	10mm	120kPa*	170g**
FMA-B3V3/LF1[P]			
FMA-B3V3/LF1[PLG]			
FMA-B3V3/LS8[P]			
FMA-B3V3/AC1[P]			

Overall Dimensions

Mounting Method (Air Inlet/Fixing/Pose Adjustment)

V3

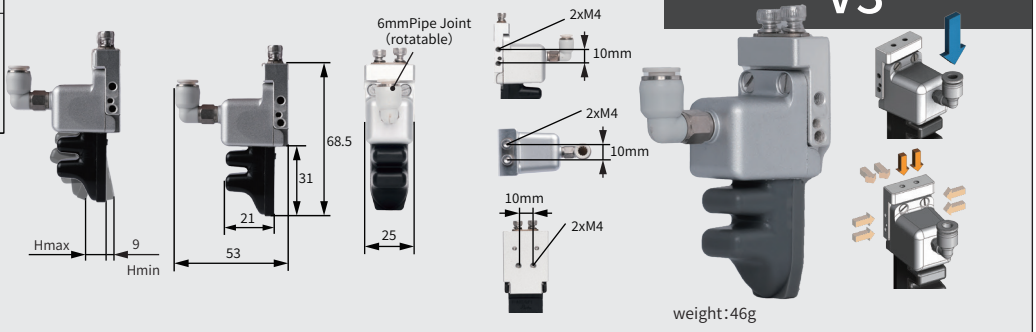

weight:46g

Model	Vacuum Stroke Hmax	Safe Pressure	Theoretical Load
FMA-B3V2/LS1[H]	6mm	260kPa*	240g**
FMA-B3V2/LS8[H]			
FMA-B3V2/LS1[P]	10mm	120kPa*	170g**
FMA-B3V2/LF1[P]			
FMA-B3V2/LF1[PLG]			
FMA-B3V2/LS8[P]			
FMA-B3V2/AC1[P]			

V2

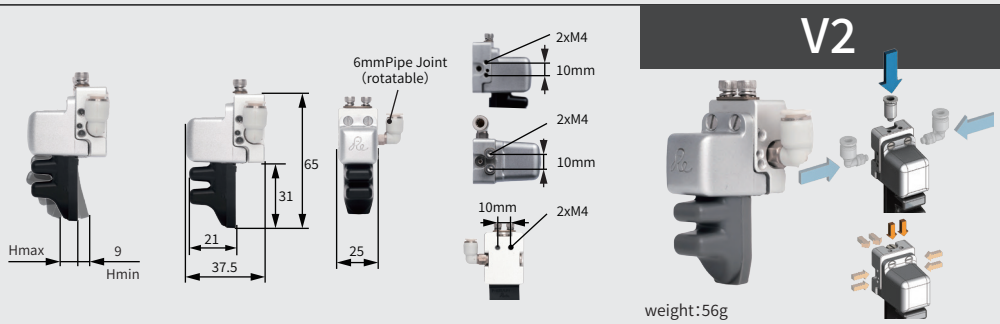

weight:56g

Model	Vacuum Stroke Hmax	Safe Pressure	Theoretical Load
FMA-B3V5/LS1[H]	6mm	260kPa*	240g**
FMA-B3V5/LS8[H]			
FMA-B3V5/LS1[P]	10mm	120kPa*	170g**
FMA-B3V5/LF1[P]			
FMA-B3V5/LF1[PLG]			
FMA-B3V5/LS8[P]			
FMA-B3V5/AC1[P]			

V5

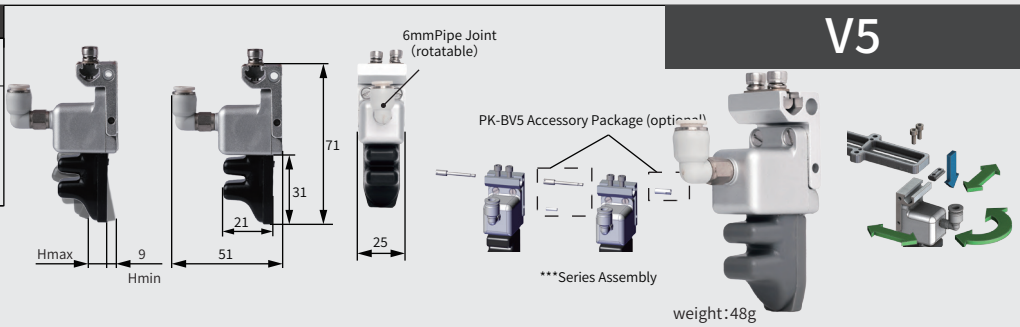

weight:48g

Model	Vacuum Stroke Hmax	Safe Pressure	Theoretical Load
FMA-B3V4/LS1[H]	6mm	260kPa*	240g**
FMA-B3V4/LS8[H]			
FMA-B3V4/LS1[P]	10mm	120kPa*	170g**
FMA-B3V4/LF1[P]			
FMA-B3V4/LF1[PLG]			
FMA-B3V4/LS8[P]			
FMA-B3V4/AC1[P]			

V4

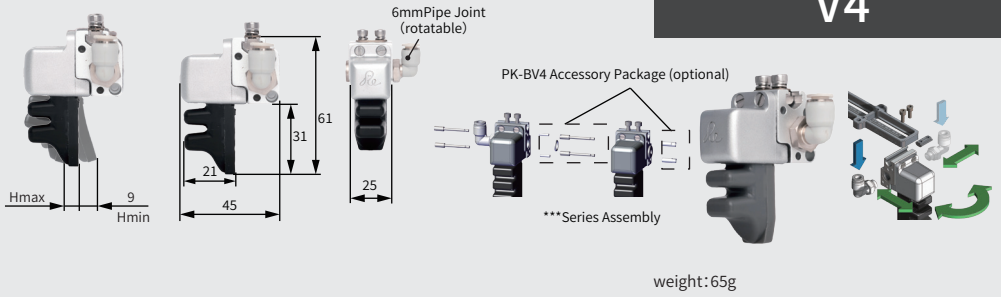

weight:65g

Model	Vacuum Stroke Hmax	Safe Pressure	Theoretical Load
FMA-B3V1/LS1[H]	12mm	260kPa*	480g**
FMA-B3V1/LS8[H]			
FMA-B3V1/LS1[P]	20mm	120kPa*	340g**
FMA-B3V1/LF1[P]			
FMA-B3V1/LF1[PLG]			
FMA-B3V1/LS8[P]			
FMA-B3V1/AC1[P]			

V1

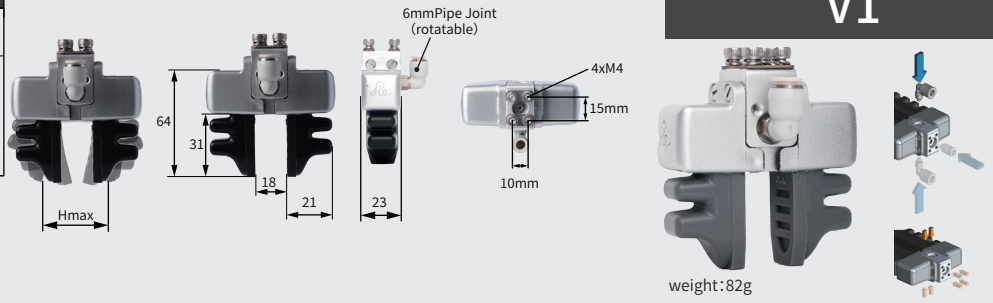

weight:82g

*Do not connect the flexible gripper directly to a high-pressure air supply. Overpressure operation will cause irreversible damage, sharply shorten service life or result in direct failure of the product. **The theoretical load is for selection reference only. The actual working load depends not only on the module model, but also on workpiece shape, wrapping performance during gripping, motion acceleration, surface friction coefficient and other factors. For actual gripping performance, please consult professional technical support for selection. ***Multiple flexible fingers can be combined in series to increase gripping force. The flexible finger module integrates air distribution function to enable seamless assembly between fingers. Only one air tube is required to drive multiple fingers simultaneously (shared air inlet), saving installation space. Assembling combined fingers requires accessory kit [PK] including bolts, nuts, sealing gaskets and pins. This kit is not included with flexible finger modules and must be purchased separately.

Number of Joints 1 2 3 4

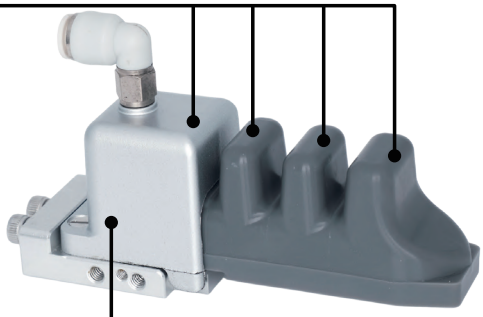

FMA-	Finger Width	Finger Joint	Mounting Method	/	Grip Texture	Material
	B	4	V3		LS1	[H]

[P]	Flexible Type	Food-grade Soft Silicone
[PAS]	Reinforced Type	Food-grade Soft Rubber, Anti-adhesive & Dust-free
[PLG]	Anti-static Flexible Type	Anti-static Soft Rubber for Electronics Industry
[PLGAS]	Anti-static Flexible Non-marking Type	Anti-static Soft Rubber for Electronics Industry, Anti-adhesive & Dust-free
[H]	Reinforced Type	Reinforced Food-grade Soft Rubber
[HAS]	Reinforced Non-marking Type	Reinforced Food-grade Soft Rubber, Anti-adhesive & Dust-free
[HLG]	Anti-static Reinforced Type	Anti-static Soft Rubber for Electronics Industry
[HLGAS]	Anti-static Reinforced Non-marking Type	Anti-static Soft Rubber for Electronics Industry, Anti-adhesive & Dust-free

Grip Texture		Features	Shape	Dimension Drawing
Standard Version	LS1	Flat head with horizontal stripes, good versatility. Suitable for most working conditions.		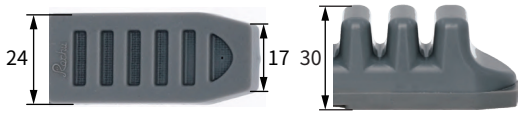
Extended Version	AC1	Flat head with flat base, suitable fordry and smooth workpieces as well as soft food		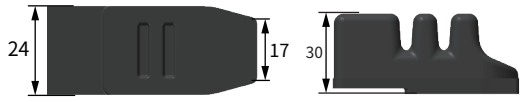
	LF1	Flat head & flat base, suitable for dry smooth workpieces and soft food.	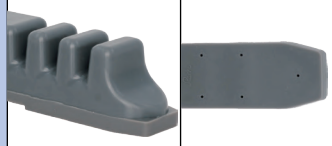	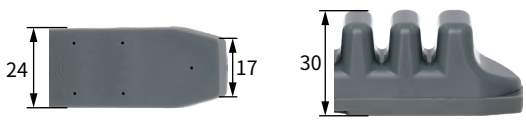
	LS8	Wedge-shaped tooth pattern, suitable for flat products such as PCBs, panels, automotive lamps, etc.		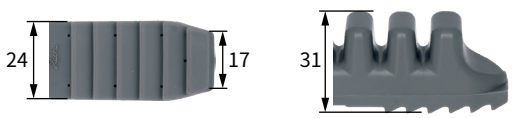
	FS3	Lip head with corrugated texture, suitable for soft textiles.		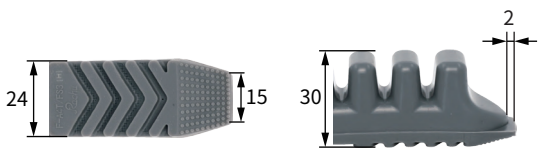

FMA-**B4 Finger Series**

Model	Vacuum Stroke Hmax	Safe Pressure	Theoretical Load
FMA-B4V3/LS1[H]	10mm	260kPa*	240g**
FMA-B4V3/LS1[HLG]			
FMA-B4V3/LS8[H]			
FMA-B4V3/U38[H]			
FMA-B4V3/U40[H]			
FMA-B4V3/LS1[P]	13mm	120kPa*	200g**
FMA-B4V3/LF1[P]			
FMA-B4V3/LS8[P]			
FMA-B4V3/FS3[P]			

Overall Dimensions

Mounting Method (Air Inlet/Fixing/Pose Adjustment)

V3

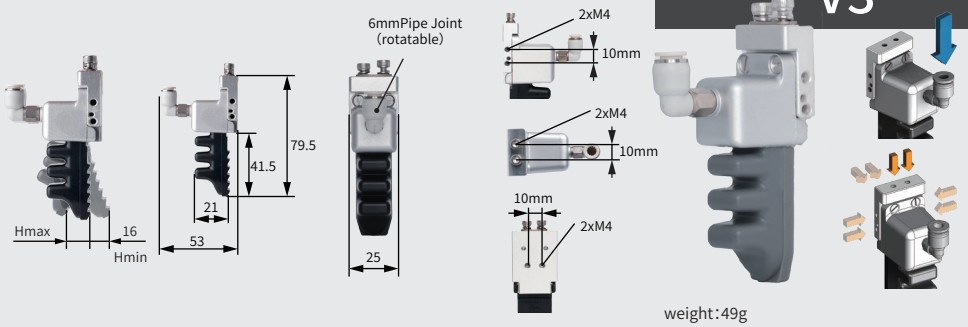

weight:49g

Model	Vacuum Stroke Hmax	Safe Pressure	Theoretical Load
FMA-B4V2/LS1[H]	10mm	260kPa*	240g**
FMA-B4V2/LS1[HLG]			
FMA-B4V2/LS8[H]			
FMA-B4V2/U38[H]			
FMA-B4V2/U40[H]			
FMA-B4V2/LS1[P]	13mm	120kPa*	200g**
FMA-B4V2/LF1[P]			
FMA-B4V2/LS8[P]			
FMA-B4V2/FS3[P]			

V2

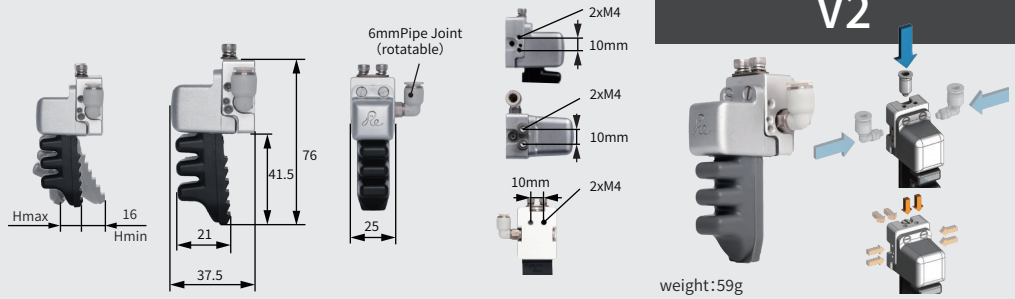

weight:59g

Model	Vacuum Stroke Hmax	Safe Pressure	Theoretical Load
FMA-B4V5/LS1[H]	10mm	260kPa*	240g**
FMA-B4V5/LS1[HLG]			
FMA-B4V5/LS8[H]			
FMA-B4V5/U38[H]			
FMA-B4V5/U40[H]			
FMA-B4V5/LS1[P]	13mm	120kPa*	200g**
FMA-B4V5/LF1[P]			
FMA-B4V5/LS8[P]			
FMA-B4V5/FS3[P]			

V5

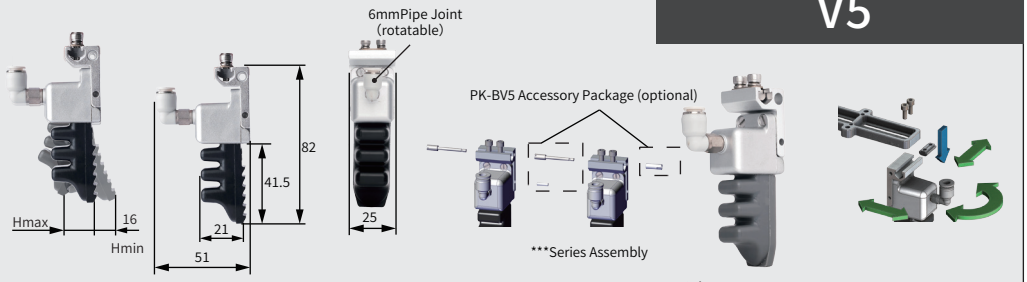

weight:51g

Model	Vacuum Stroke Hmax	Safe Pressure	Theoretical Load
FMA-B4V4/LS1[H]	10mm	260kPa*	240g**
FMA-B4V4/LS1[HLG]			
FMA-B4V4/LS8[H]			
FMA-B4V4/U38[H]			
FMA-B4V4/U40[H]			
FMA-B4V4/LS1[P]	13mm	120kPa*	200g**
FMA-B4V4/LF1[P]			
FMA-B4V4/LS8[P]			
FMA-B4V4/FS3[P]			

V4

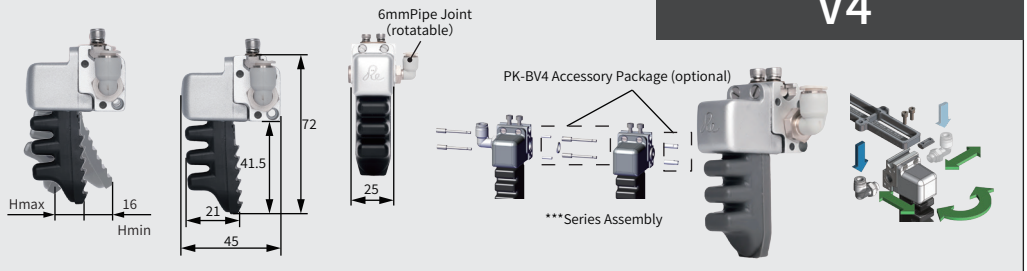

weight:68g

Model	Vacuum Stroke Hmax	Safe Pressure	Theoretical Load
FMA-B4V1/LS1[H]	20mm	260kPa*	480g**
FMA-B4V1/LS1[HLG]			
FMA-B4V1/LS8[H]			
FMA-B4V1/U38[H]			
FMA-B4V1/U40[H]			
FMA-B4V1/LS1[P]	26mm	120kPa*	400g**
FMA-B4V1/LF1[P]			
FMA-B4V1/LS8[P]			
FMA-B4V1/FS3[P]			

V1

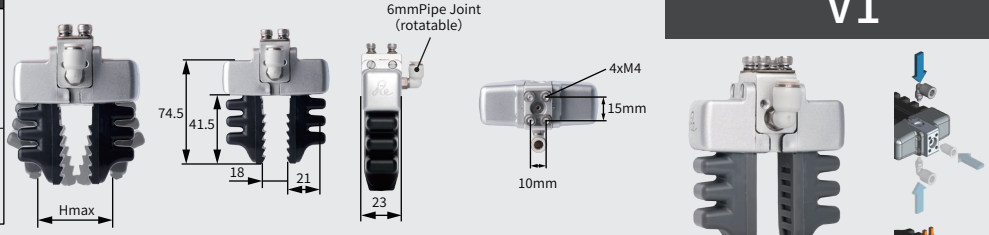

weight:88g

*Do not connect the flexible gripper directly to a high-pressure air supply. Overpressure operation will cause irreversible damage, sharply shorten service life or result in direct failure of the product. **The theoretical load is for selection reference only. The actual working load depends not only on the module model, but also on workpiece shape, wrapping performance during gripping, motion acceleration, surface friction coefficient and other factors. For actual gripping performance, please consult professional technical support for selection. ***Multiple flexible fingers can be combined in series to increase gripping force. The flexible finger module integrates air distribution function to enable seamless assembly between fingers. Only one air tube is required to drive multiple fingers simultaneously (shared air inlet), saving installation space. Assembling combined fingers requires accessory kit [PK] including bolts, nuts, sealing gaskets and pins. This kit is not included with flexible finger modules and must be purchased separately.

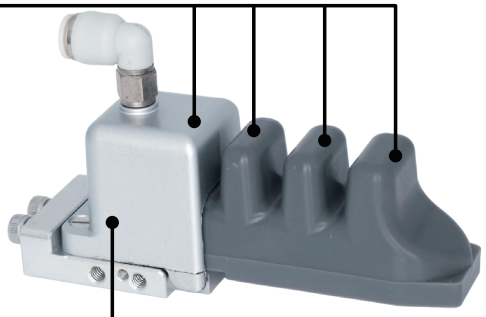

	Finger Width	Finger Joint	Mounting Method		Grip Texture	Material
FMA-	B	4	V3	/	LS1	[H]

[P]	Flexible Type	Food-grade Soft Silicone
[PAS]	Reinforced Type	Food-grade Soft Rubber, Anti-adhesive & Dust-free
[PLG]	Anti-static Flexible Type	Anti-static Soft Rubber for Electronics Industry
[PLGAS]	Anti-static Flexible Non-marking Type	Anti-static Soft Rubber for Electronics Industry, Anti-adhesive & Dust-free
[H]	Reinforced Type	Reinforced Food-grade Soft Rubber
[HAS]	Reinforced Non-marking Type	Reinforced Food-grade Soft Rubber, Anti-adhesive & Dust-free
[HLG]	Anti-static Reinforced Type	Anti-static Soft Rubber for Electronics Industry
[HLGAS]	Anti-static Reinforced Non-marking Type	Anti-static Soft Rubber for Electronics Industry, Anti-adhesive & Dust-free

Grip Texture		Features	Shape	Dimension Drawing
Standard Version	LS1	Flat head with horizontal stripes, good versatility. Suitable for most working conditions.		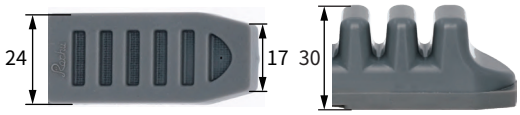
Extended Version	LF1	Flat head & flat base, suitable for dry smooth workpieces and soft food.	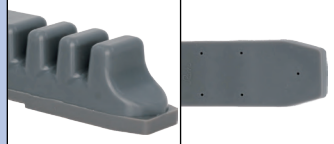	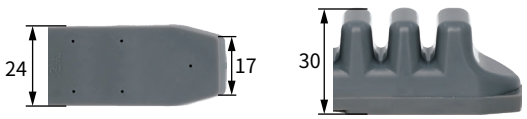
	LS8	Wedge-shaped tooth pattern, suitable for flat products such as PCBs, panels, automotive lamps, etc.		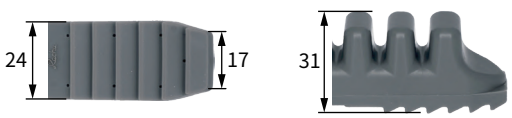
	FS3	Lip head with corrugated texture, suitable for soft textiles.		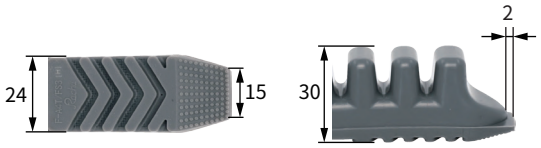
Special Version For more special models, please contact customer service.	U38	Widened fingertip design, suitable for soft food and prevents marking.		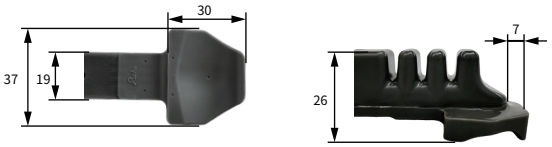
	U40	Curved contoured fingertip enables enveloping gripping of cylindrical	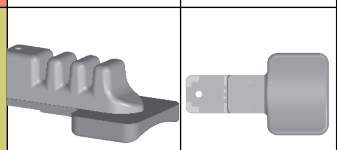	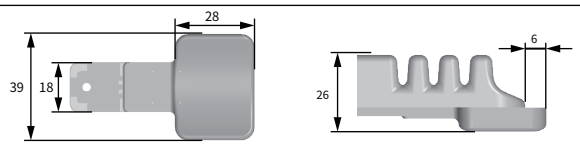

FMA-**B5 Finger Series**

Model	Vacuum Stroke Hmax	Safe Pressure	Theoretical Load
FMA-B5V3/LS1[H]	14mm	260kPa*	230g**
FMA-B5V3/LF1[H]			
FMA-B5V3/LS8[H]			
FMA-B5V3/LS1[P]	16mm	120kPa*	180g**
FMA-B5V3/LF1[P]			
FMA-B5V3/LS8[P]			
FMA-B5V3/FS3[P]			

Overall Dimensions

Mounting Method (Air Inlet/Fixing/Pose Adjustment)

V3

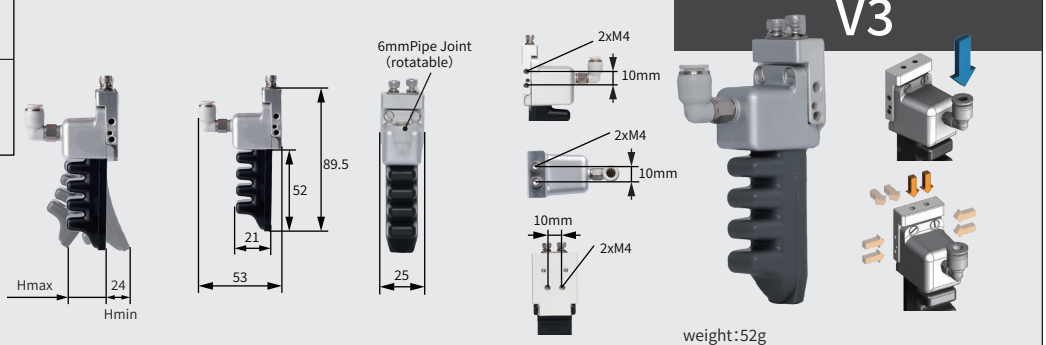

weight:52g

Model	Vacuum Stroke Hmax	Safe Pressure	Theoretical Load
FMA-B5V2/LS1[H]	14mm	260kPa*	230g**
FMA-B5V2/LF1[H]			
FMA-B5V2/LS8[H]			
FMA-B5V2/LS1[P]	16mm	120kPa*	180g**
FMA-B5V2/LF1[P]			
FMA-B5V2/LS8[P]			
FMA-B5V2/FS3[P]			

V2

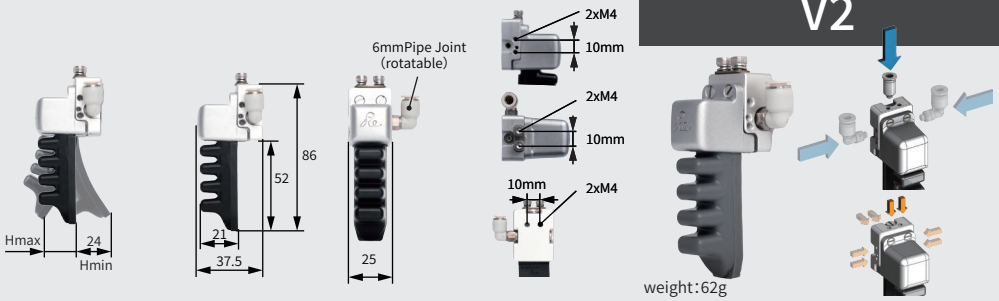

weight:62g

Model	Vacuum Stroke Hmax	Safe Pressure	Theoretical Load
FMA-B5V5/LS1[H]	14mm	260kPa*	230g**
FMA-B5V5/LF1[H]			
FMA-B5V5/LS8[H]			
FMA-B5V5/LS1[P]	16mm	120kPa*	180g**
FMA-B5V5/LF1[P]			
FMA-B5V5/LS8[P]			
FMA-B5V5/FS3[P]			

V5

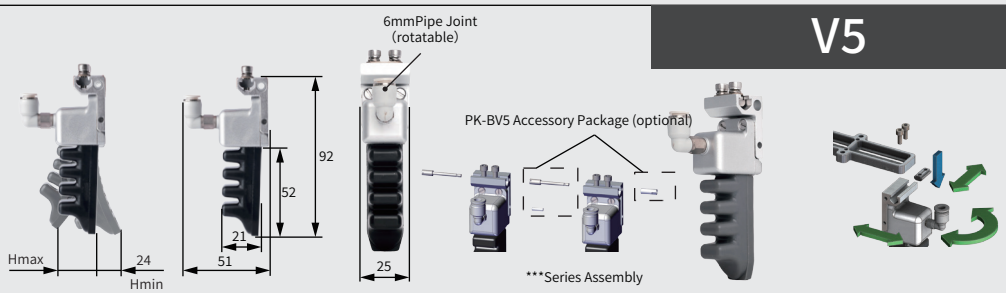

weight:54g

Model	Vacuum Stroke Hmax	Safe Pressure	Theoretical Load
FMA-B5V4/LS1[H]	14mm	260kPa*	230g**
FMA-B5V4/LF1[H]			
FMA-B5V4/LS8[H]			
FMA-B5V4/LS1[P]	16mm	120kPa*	180g**
FMA-B5V4/LF1[P]			
FMA-B5V4/LS8[P]			
FMA-B5V4/FS3[P]			

V4

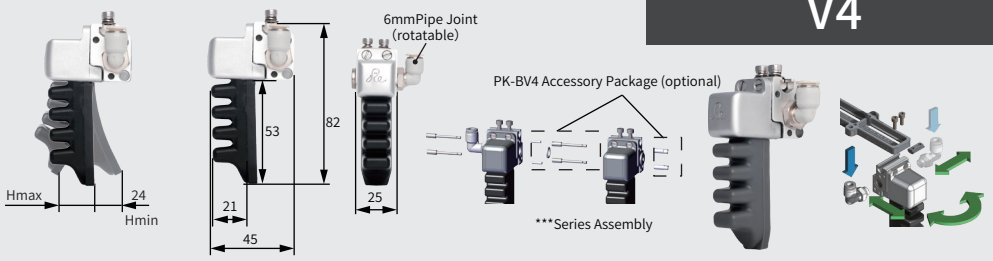

weight:71g

Model	Vacuum Stroke Hmax	Safe Pressure	Theoretical Load
FMA-B5V1/LS1[H]	28mm	260kPa*	460g**
FMA-B5V1/LF1[H]			
FMA-B5V1/LS8[H]			
FMA-B5V1/LS1[P]	32mm	120kPa*	360g**
FMA-B5V1/LF1[P]			
FMA-B5V1/LS8[P]			
FMA-B5V1/FS3[P]			

V1

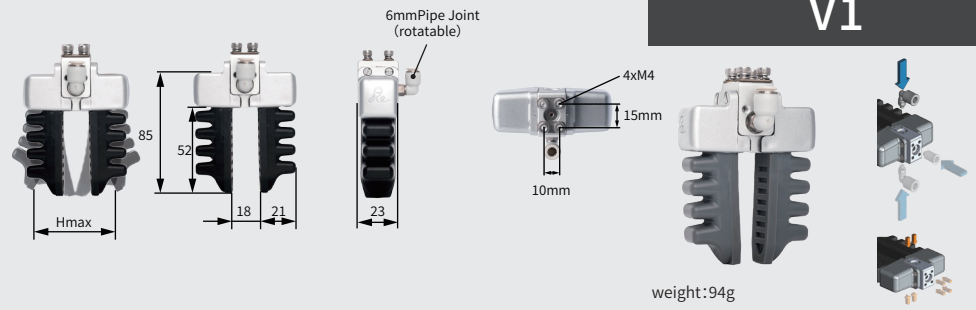

weight:94g

*Do not connect the flexible gripper directly to a high-pressure air supply. Overpressure operation will cause irreversible damage, sharply shorten service life or result in direct failure of the product. **The theoretical load is for selection reference only. The actual working load depends not only on the module model, but also on workpiece shape, wrapping performance during gripping, motion acceleration, surface friction coefficient and other factors. For actual gripping performance, please consult professional technical support for selection. ***Multiple flexible fingers can be combined in series to increase gripping force. The flexible finger module integrates air distribution function to enable seamless assembly between fingers. Only one air tube is required to drive multiple fingers simultaneously (shared air inlet), saving installation space. Assembling combined fingers requires accessory kit [PK] including bolts, nuts, sealing gaskets and pins. This kit is not included with flexible finger modules and must be purchased separately.

Number of Joints 1 2 3 4

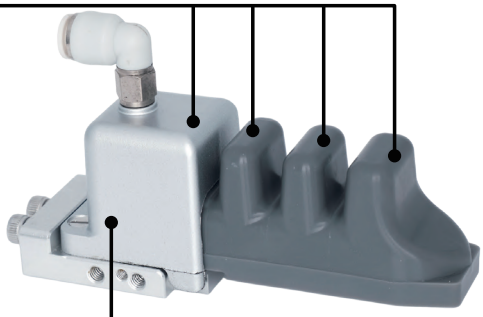

[P]	Flexible Type	Food-grade Soft Silicone
[PAS]	Reinforced Type	Food-grade Soft Rubber, Anti-adhesive & Dust-free
[PLG]	Anti-static Flexible Type	Anti-static Soft Rubber for Electronics Industry
[PLGAS]	Anti-static Flexible Non-marking Type	Anti-static Soft Rubber for Electronics Industry, Anti-adhesive & Dust-free
[H]	Reinforced Type	Reinforced Food-grade Soft Rubber
[HAS]	Reinforced Non-marking Type	Reinforced Food-grade Soft Rubber, Anti-adhesive & Dust-free
[HLG]	Anti-static Reinforced Type	Anti-static Soft Rubber for Electronics Industry
[HLGAS]	Anti-static Reinforced Non-marking Type	Anti-static Soft Rubber for Electronics Industry, Anti-adhesive & Dust-free

FMA-	Finger Width	Finger Joint	Mounting Method	/	Grip Texture	Material
	B	4	V3		LS1	[H]

Grip Texture		Features	Shape	Dimension Drawing
Standard Version	LS1	Flat head with horizontal stripes, good versatility. Suitable for most working conditions.		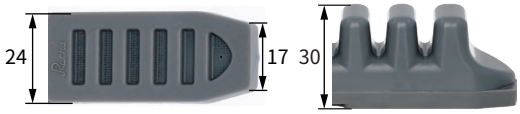
Extended Version	LF1	Flat head & flat base, suitable for dry smooth workpieces and soft food.	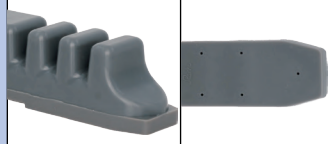	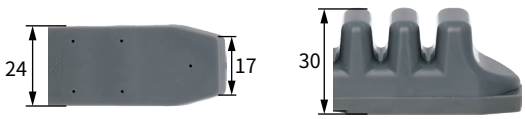
	LS8	Wedge-shaped tooth pattern, suitable for flat products such as PCBs, panels, automotive lamps, etc.		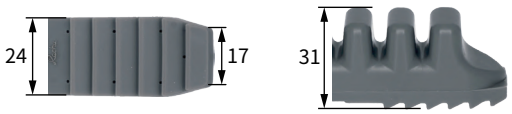
	FS3	Lip head with corrugated texture, suitable for soft textiles.		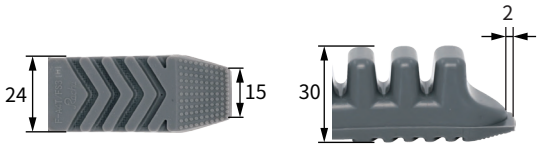

FMA-**B6 Finger Series**

Model	Vacuum Stroke Hmax	Safe Pressure	Theoretical Load
FMA-B6V3/LS1[H]	17mm	260kPa*	174g**
FMA-B6V3/LS1[P]	23mm	120kPa*	144g**
FMA-B6V3/LF1[P]			
FMA-B6V3/LS8[P]			
FMA-B6V3/FS3[P]			

Overall Dimensions

Mounting Method (Air Inlet/Fixing/Pose Adjustment)

V3

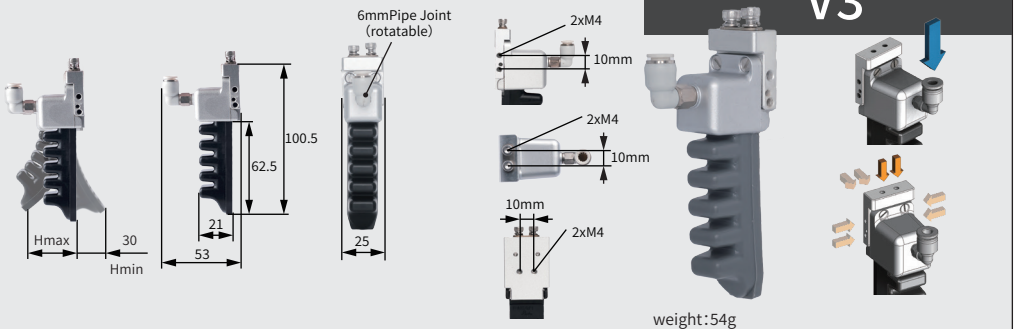

weight:54g

Model	Vacuum Stroke Hmax	Safe Pressure	Theoretical Load
FMA-B6V2/LS1[H]	17mm	260kPa*	174g**
FMA-B6V2/LS1[P]	23mm	120kPa*	144g**
FMA-B6V2/LF1[P]			
FMA-B6V2/LS8[P]			
FMA-B6V2/FS3[P]			

V2

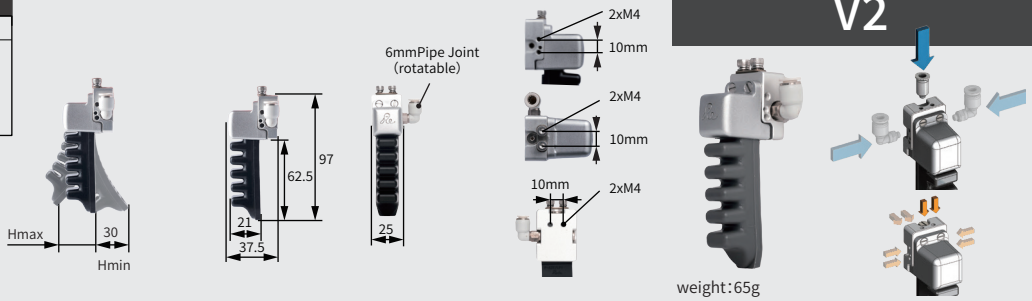

weight:65g

Model	Vacuum Stroke Hmax	Safe Pressure	Theoretical Load
FMA-B6V5/LS1[H]	17mm	260kPa*	174g**
FMA-B6V5/LS1[P]	23mm	120kPa*	144g**
FMA-B6V5/LF1[P]			
FMA-B6V5/LS8[P]			
FMA-B6V5/FS3[P]			

V5

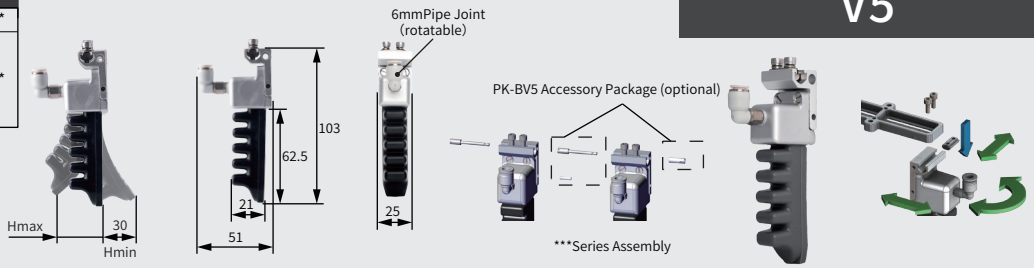

weight:57g

Model	Vacuum Stroke Hmax	Safe Pressure	Theoretical Load
FMA-B6V4/LS1[H]	17mm	260kPa*	174g**
FMA-B6V4/LS1[P]	23mm	120kPa*	144g**
FMA-B6V4/LF1[P]			
FMA-B6V4/LS8[P]			
FMA-B6V4/FS3[P]			

V4

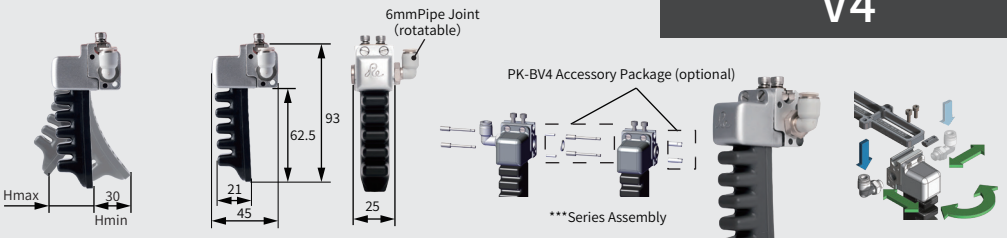

weight:74g

Model	Vacuum Stroke Hmax	Safe Pressure	Theoretical Load
FMA-B6V1/LS1[H]	34mm	260kPa*	348g**
FMA-B6V1/LS1[P]	46mm	120kPa*	288g**
FMA-B6V1/LF1[P]			
FMA-B6V1/LS8[P]			
FMA-B6V1/FS3[P]			

V1

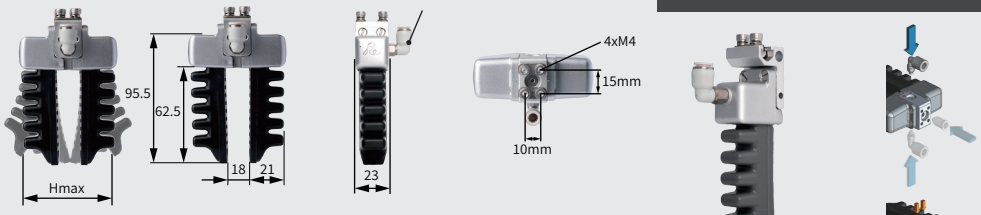

weight:100g

*Do not connect the flexible gripper directly to a high-pressure air supply. Overpressure operation will cause irreversible damage, sharply shorten service life or result in direct failure of the product. **The theoretical load is for selection reference only. The actual working load depends not only on the module model, but also on workpiece shape, wrapping performance during gripping, motion acceleration, surface friction coefficient and other factors. For actual gripping performance, please consult professional technical support for selection. ***Multiple flexible fingers can be combined in series to increase gripping force. The flexible finger module integrates air distribution function to enable seamless assembly between fingers. Only one air tube is required to drive multiple fingers simultaneously (shared air inlet), saving installation space. Assembling combined fingers requires accessory kit [PK] including bolts, nuts, sealing gaskets and pins. This kit is not included with flexible finger modules and must be purchased separately.

Number of Joints 1 2 3 4

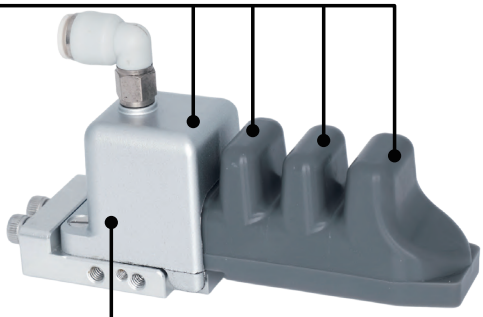

[P]	Flexible Type	Food-grade Soft Silicone
[PAS]	Reinforced Type	Food-grade Soft Rubber, Anti-adhesive & Dust-free
[PLG]	Anti-static Flexible Type	Anti-static Soft Rubber for Electronics Industry
[PLGAS]	Anti-static Flexible Non-marking Type	Anti-static Soft Rubber for Electronics Industry, Anti-adhesive & Dust-free
[H]	Reinforced Type	Reinforced Food-grade Soft Rubber
[HAS]	Reinforced Non-marking Type	Reinforced Food-grade Soft Rubber, Anti-adhesive & Dust-free
[HLG]	Anti-static Reinforced Type	Anti-static Soft Rubber for Electronics Industry
[HLGAS]	Anti-static Reinforced Non-marking Type	Anti-static Soft Rubber for Electronics Industry, Anti-adhesive & Dust-free

FMA-	Finger Width	Finger Joint	Mounting Method	/	Grip Texture	Material
	B	4	V3		LS1	[H]

Grip Texture		Features	Shape	Dimension Drawing
Standard Version	LS1	Flat head with horizontal stripes, good versatility. Suitable for most working conditions.		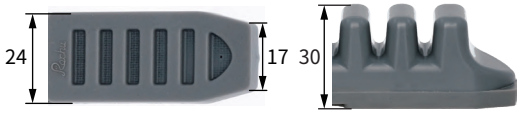
Extended Version	LF1	Flat head & flat base, suitable for dry smooth workpieces and soft food.	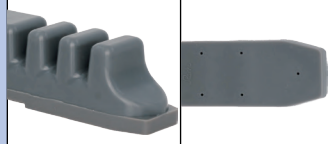	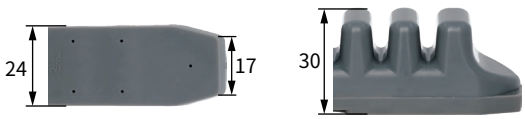
	LS8	Wedge-shaped tooth pattern, suitable for flat products such as PCBs, panels, automotive lamps, etc.		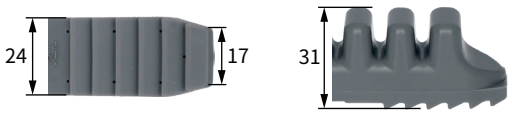
	FS3	Lip head with corrugated texture, suitable for soft textiles.		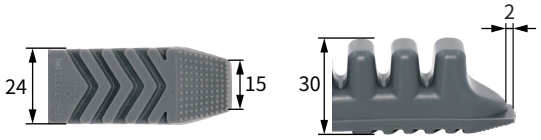

FMA-**B7 Finger Series**

Model	Vacuum Stroke Hmax	Safe Pressure	Theoretical Load
FMA-B7V3/LS1[H]	21mm	260kPa*	138g**
FMA-B7V3/LS1[P]	30mm	120kPa*	79g**

Overall Dimensions

Mounting Method (Air Inlet/Fixing/Pose Adjustment)

V3

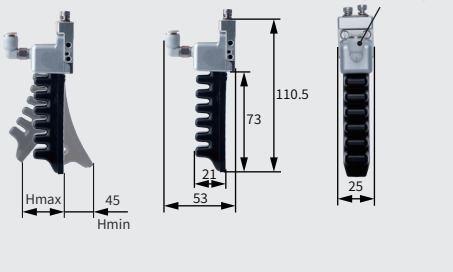

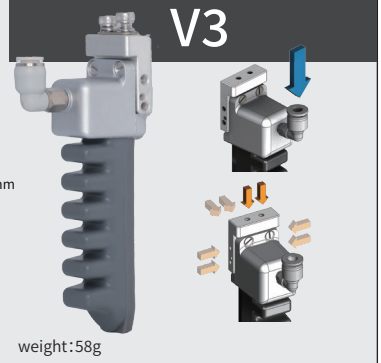

weight:58g

Model	Vacuum Stroke Hmax	Safe Pressure	Theoretical Load
FMA-B7V2/LS1[H]	21mm	260kPa*	138g**
FMA-B7V2/LS1[P]	30mm	120kPa*	79g**

V2

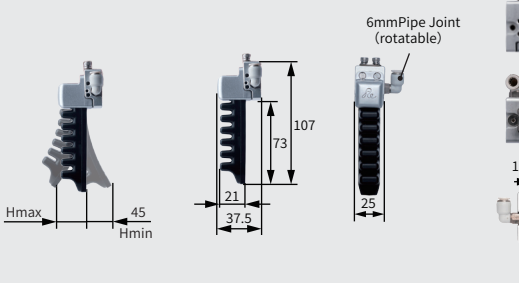

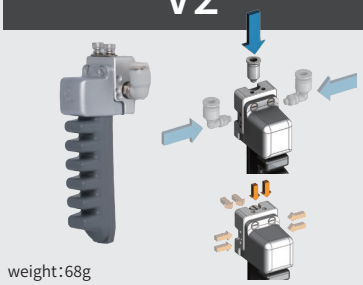

weight:68g

Model	Vacuum Stroke Hmax	Safe Pressure	Theoretical Load
FMA-B7V5/LS1[H]	21mm	260kPa*	138g**
FMA-B7V5/LS1[P]	30mm	120kPa*	79g**

V5

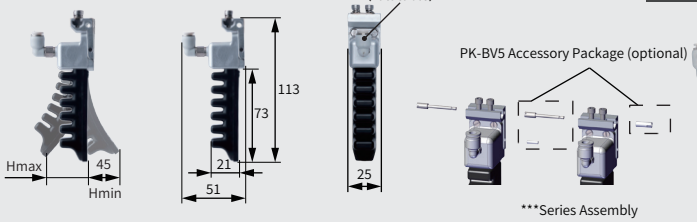

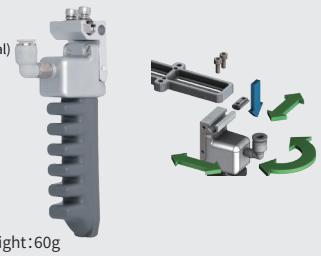

weight:60g

Model	Vacuum Stroke Hmax	Safe Pressure	Theoretical Load
FMA-B7V4/LS1[H]	21mm	260kPa*	138g**
FMA-B7V4/LS1[P]	30mm	120kPa*	79g**

V4

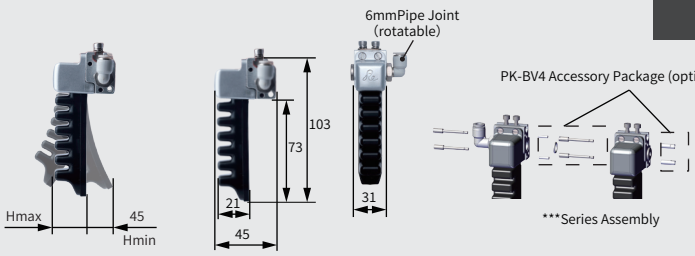

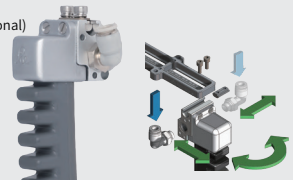

weight:77g

Model	Vacuum Stroke Hmax	Safe Pressure	Theoretical Load
FMA-B7V1/LS1[H]	42mm	260kPa*	276g**
FMA-B7V1/LS1[P]	60mm	120kPa*	158g**

V1

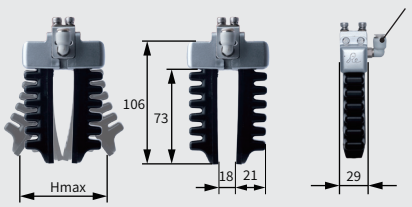

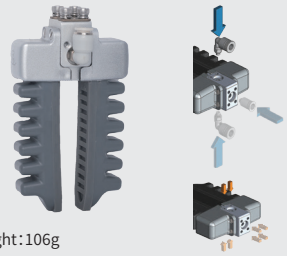

weight:106g

*Do not connect the flexible gripper directly to a high-pressure air supply. Overpressure operation will cause irreversible damage, sharply shorten service life or result in direct failure of the product. **The theoretical load is for selection reference only. The actual working load depends not only on the module model, but also on workpiece shape, wrapping performance during gripping, motion acceleration, surface friction coefficient and other factors. For actual gripping performance, please consult professional technical support for selection. ***Multiple flexible fingers can be combined in series to increase gripping force. The flexible finger module integrates air distribution function to enable seamless assembly between fingers. Only one air tube is required to drive multiple fingers simultaneously (shared air inlet), saving installation space. Assembling combined fingers requires accessory kit [PK] including bolts, nuts, sealing gaskets and pins. This kit is not included with flexible finger modules and must be purchased separately.

Number of Joints 1 2 3 4

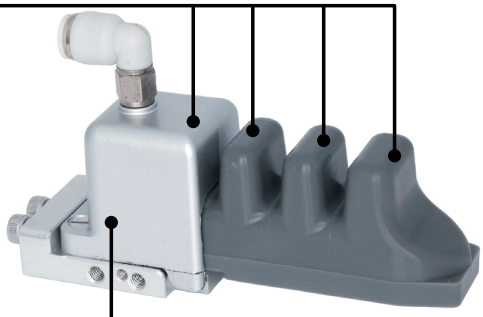

[P]	Flexible Type	Food-grade Soft Silicone
[PAS]	Reinforced Type	Food-grade Soft Rubber, Anti-adhesive & Dust-free
[PLG]	Anti-static Flexible Type	Anti-static Soft Rubber for Electronics Industry
[PLGAS]	Anti-static Flexible Non-marking Type	Anti-static Soft Rubber for Electronics Industry, Anti-adhesive & Dust-free
[H]	Reinforced Type	Reinforced Food-grade Soft Rubber
[HAS]	Reinforced Non-marking Type	Reinforced Food-grade Soft Rubber, Anti-adhesive & Dust-free
[HLG]	Anti-static Reinforced Type	Anti-static Soft Rubber for Electronics Industry
[HLGAS]	Anti-static Reinforced Non-marking Type	Anti-static Soft Rubber for Electronics Industry, Anti-adhesive & Dust-free

FMA-	Finger Width	Finger Joint	Mounting Method	/	Grip Texture	Material
	B	4	V3		LS1	[H]

Grip Texture		Features	Shape	Dimension Drawing
Standard Version	LS1	Flat head with horizontal stripes, good versatility. Suitable for most working conditions.		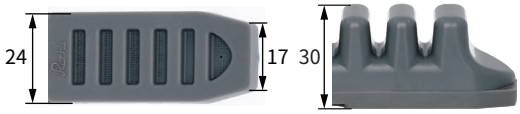

FMA-**B3 Finger Series**

Model	Vacuum Stroke Hmax	Safe Pressure	Theoretical Load
FMA-B8V3/LS1[H]	25mm	260kPa*	144g**
FMA-B8V3/LS1[P]	37mm	120kPa*	108g**
FMA-B8V3/LF1[P]			
FMA-B8V3/FS3[P]			

Overall Dimensions

Mounting Method (Air Inlet/Fixing/Pose Adjustment)

V3

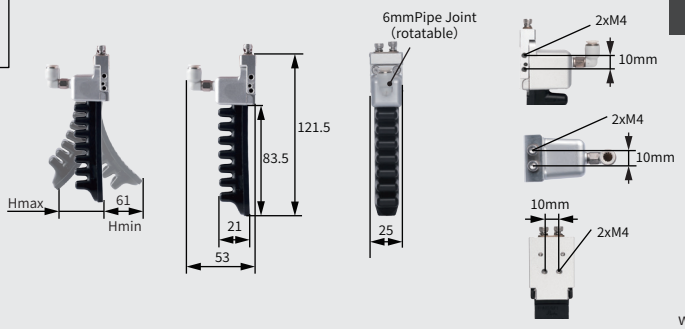

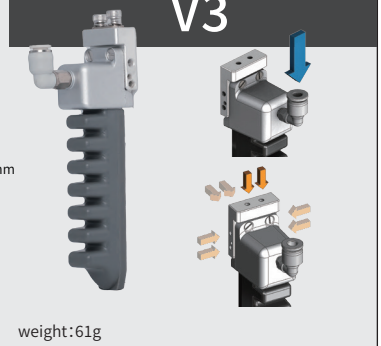

weight:61g

Model	Vacuum Stroke Hmax	Safe Pressure	Theoretical Load
FMA-B8V2/LS1[H]	25mm	260kPa*	144g**
FMA-B8V2/LS1[P]	37mm	120kPa*	108g**
FMA-B8V2/LF1[P]			
FMA-B8V2/FS3[P]			

V2

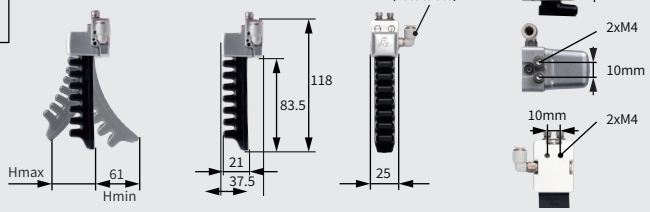

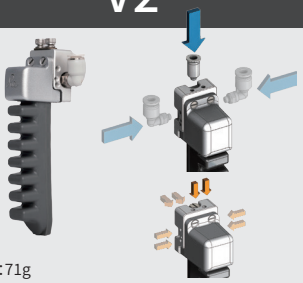

weight:71g

Model	Vacuum Stroke Hmax	Safe Pressure	Theoretical Load
FMA-B8V5/LS1[H]	25mm	260kPa*	144g**
FMA-B8V5/LS1[P]	37mm	120kPa*	108g**
FMA-B8V5/LF1[P]			
FMA-B8V5/FS3[P]			

V5

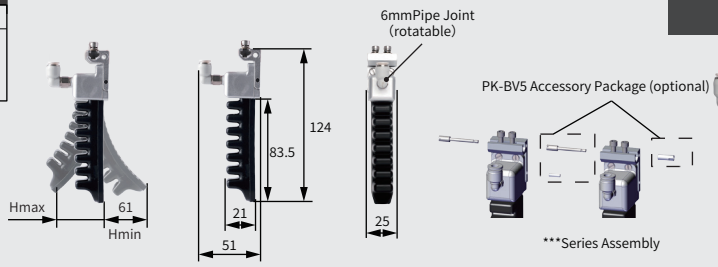

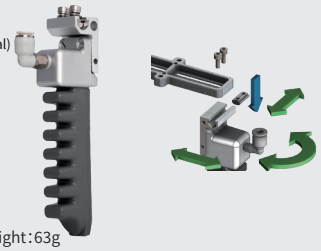

weight:63g

Model	Vacuum Stroke Hmax	Safe Pressure	Theoretical Load
FMA-B8V4/LS1[H]	50mm	260kPa*	288g**
FMA-B8V4/LS1[P]	74mm	120kPa*	216g**
FMA-B8V4/LF1[P]			
FMA-B8V4/FS3[P]			

V4

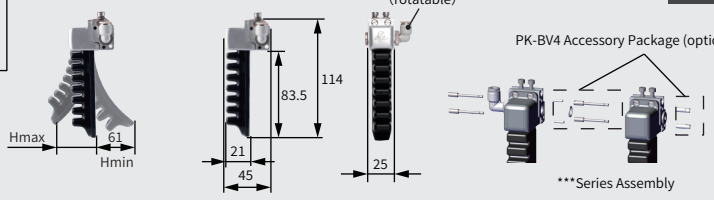

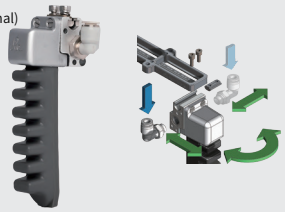

weight:80g

Model	Vacuum Stroke Hmax	Safe Pressure	Theoretical Load
FMA-B8V1/LS1[H]	12mm	260kPa*	490g**
FMA-B8V1/LS1[P]	10mm	120kPa*	340g**
FMA-B8V1/LF1[P]			
FMA-B8V1/FS3[P]			

V1

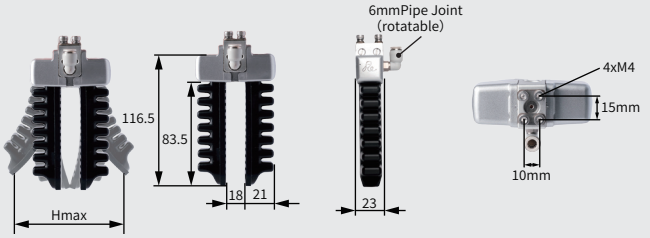

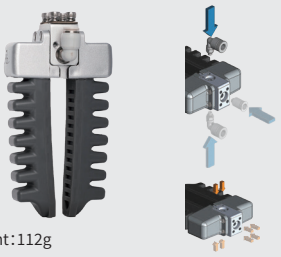

weight:112g

*Do not connect the flexible gripper directly to a high-pressure air supply. Overpressure operation will cause irreversible damage, sharply shorten service life or result in direct failure of the product. **The theoretical load is for selection reference only. The actual working load depends not only on the module model, but also on workpiece shape, wrapping performance during gripping, motion acceleration, surface friction coefficient and other factors. For actual gripping performance, please consult professional technical support for selection. ***Multiple flexible fingers can be combined in series to increase gripping force. The flexible finger module integrates air distribution function to enable seamless assembly between fingers. Only one air tube is required to drive multiple fingers simultaneously (shared air inlet), saving installation space. Assembling combined fingers requires accessory kit [PK] including bolts, nuts, sealing gaskets and pins. This kit is not included with flexible finger modules and must be purchased separately.

Number of Joints 1 2 3 4

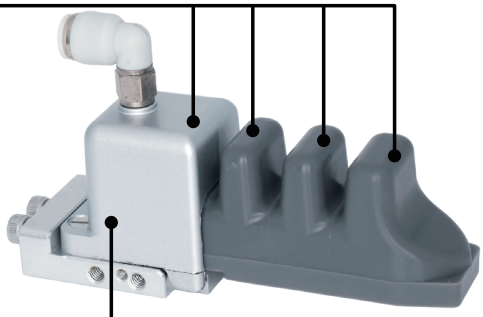

[P]	Flexible Type	Food-grade Soft Silicone
[PAS]	Reinforced Type	Food-grade Soft Rubber, Anti-adhesive & Dust-free
[PLG]	Anti-static Flexible Type	Anti-static Soft Rubber for Electronics Industry
[PLGAS]	Anti-static Flexible Non-marking Type	Anti-static Soft Rubber for Electronics Industry, Anti-adhesive & Dust-free
[H]	Reinforced Type	Reinforced Food-grade Soft Rubber
[HAS]	Reinforced Non-marking Type	Reinforced Food-grade Soft Rubber, Anti-adhesive & Dust-free
[HLG]	Anti-static Reinforced Type	Anti-static Soft Rubber for Electronics Industry
[HLGAS]	Anti-static Reinforced Non-marking Type	Anti-static Soft Rubber for Electronics Industry, Anti-adhesive & Dust-free

FMA-	Finger Width	Finger Joint	Mounting Method	/	Grip Texture	Material
	B	4	V3		LS1	[H]

Grip Texture		Features	Shape	Dimension Drawing
Standard Version	LS1	Flat head with horizontal stripes, good versatility. Suitable for most working conditions.		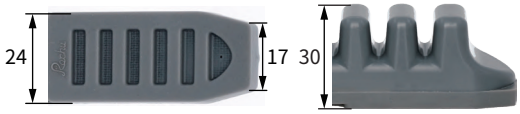
Extended Version	LF1	Flat head & flat base, suitable for dry smooth workpieces and soft food.	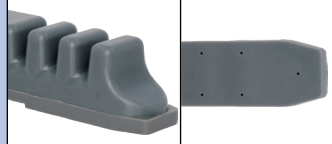	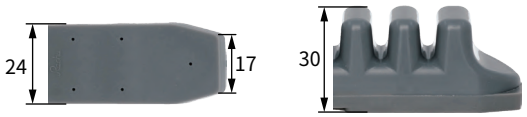
	FS3	Lip head with corrugated texture, suitable for soft textiles.		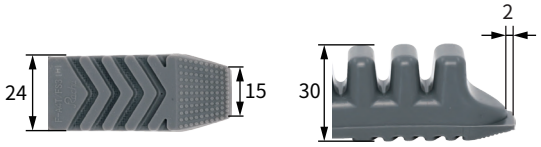

FMA-**C3 Finger Series**

Model	Vacuum Stroke Hmax	Safe Pressure	Theoretical Load
FMA-C3V3/LS1[H]	1mm	220kPa*	77g**
FMA-C3V3/LF1[H]			
FMA-C3V3/LS1[P]	5mm	120kPa*	98g**
FMA-C3V3/LF1[P]			

Overall Dimensions

Mounting Method (Air Inlet/Fixing/Pose Adjustment)

V3

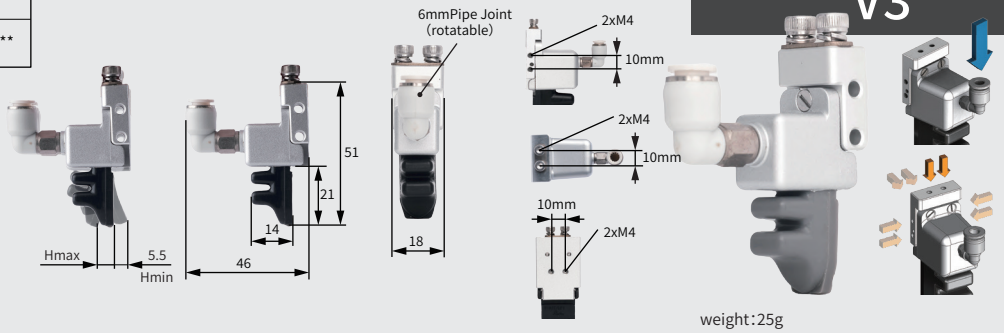

weight:25g

Model	Vacuum Stroke Hmax	Safe Pressure	Theoretical Load
FMA-C3V2/LS1[H]	1mm	220kPa*	77g**
FMA-C3V2/LF1[H]			
FMA-C3V2/LS1[P]	5mm	120kPa*	98g**
FMA-C3V2/LF1[P]			

V2

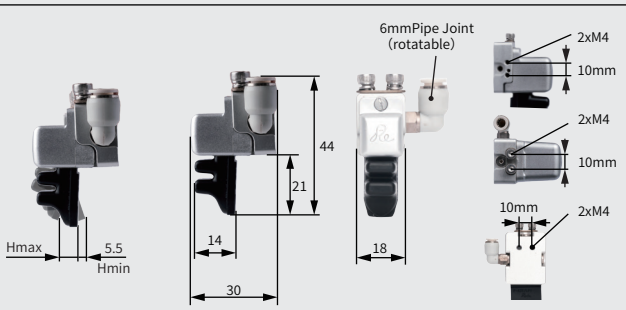

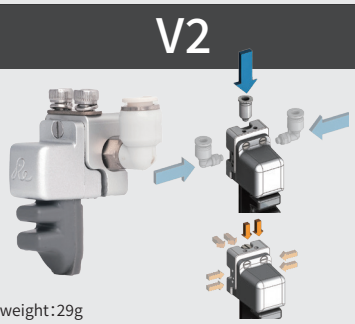

weight:29g

Model	Vacuum Stroke Hmax	Safe Pressure	Theoretical Load
FMA-C3V5/LS1[H]	1mm	220kPa*	77g**
FMA-C3V5/LF1[H]			
FMA-C3V5/LS1[P]	5mm	120kPa*	98g**
FMA-C3V5/LF1[P]			

V5

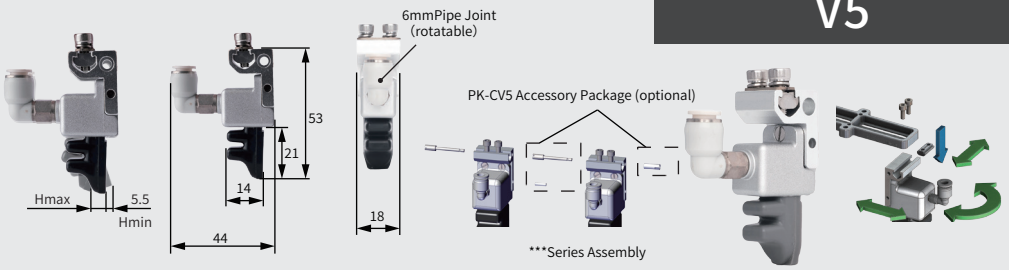

weight:29g

Model	Vacuum Stroke Hmax	Safe Pressure	Theoretical Load
FMA-C3V4/LS1[H]	1mm	220kPa*	77g**
FMA-C3V4/LF1[H]			
FMA-C3V4/LS1[P]	5mm	120kPa*	98g**
FMA-C3V4/LF1[P]			

V4

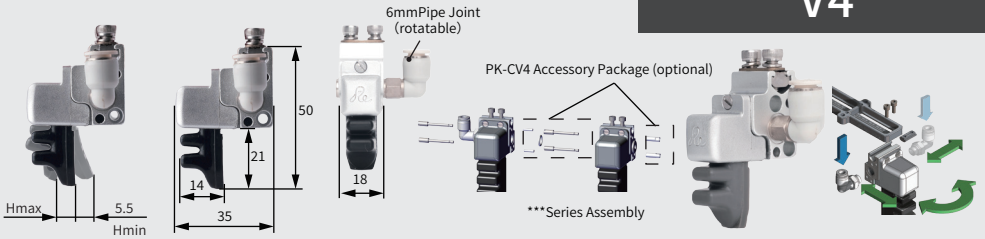

weight:36g

Model	Vacuum Stroke Hmax	Safe Pressure	Theoretical Load
FMA-C3V1/LS1[H]	2mm	220kPa*	154g**
FMA-C3V1/LF1[H]			
FMA-C3V1/LS1[P]	10mm	120kPa*	196g**
FMA-C3V1/LF1[P]			

V1

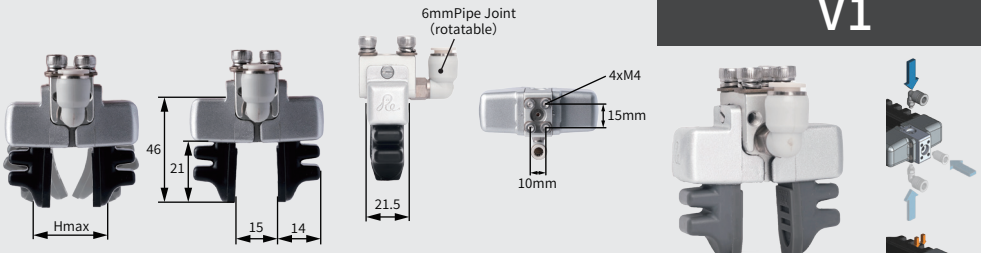

weight:41g

*Do not connect the flexible gripper directly to a high-pressure air supply. Overpressure operation will cause irreversible damage, sharply shorten service life or result in direct failure of the product. **The theoretical load is for selection reference only. The actual working load depends not only on the module model, but also on workpiece shape, wrapping performance during gripping, motion acceleration, surface friction coefficient and other factors. For actual gripping performance, please consult professional technical support for selection. ***Multiple flexible fingers can be combined in series to increase gripping force. The flexible finger module integrates air distribution function to enable seamless assembly between fingers. Only one air tube is required to drive multiple fingers simultaneously (shared air inlet), saving installation space. Assembling combined fingers requires accessory kit [PK] including bolts, nuts, sealing gaskets and pins. This kit is not included with flexible finger modules and must be purchased separately.

Number of Joints 1 2 3 4

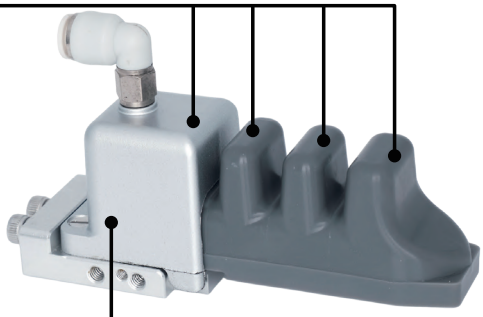

Finger Width	Finger Joint	Mounting Method		Grip Texture	Material
FMA- C	4	V3	/	LS1	[H]

[P]	Flexible Type	Food-grade Soft Silicone
[PAS]	Reinforced Type	Food-grade Soft Rubber, Anti-adhesive & Dust-free
[PLG]	Anti-static Flexible Type	Anti-static Soft Rubber for Electronics Industry
[PLGAS]	Anti-static Flexible Non-marking Type	Anti-static Soft Rubber for Electronics Industry, Anti-adhesive & Dust-free
[H]	Reinforced Type	Reinforced Food-grade Soft Rubber
[HAS]	Reinforced Non-marking Type	Reinforced Food-grade Soft Rubber, Anti-adhesive & Dust-free
[HLG]	Anti-static Reinforced Type	Anti-static Soft Rubber for Electronics Industry
[HLGAS]	Anti-static Reinforced Non-marking Type	Anti-static Soft Rubber for Electronics Industry, Anti-adhesive & Dust-free

Grip Texture		Features	Shape	Dimension Drawing
Standard Version	LS1	Flat head with horizontal stripes, good versatility. Suitable for most working conditions.		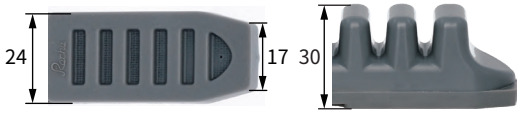
Extended Version	LF1	Flat head & flat base, suitable for dry smooth workpieces and soft food.		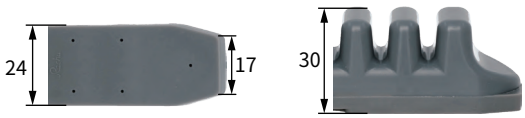

FMA-**C4 Finger Series**

Model	Vacuum Stroke Hmax	Safe Pressure	Theoretical Load
FMA-C4V3/LS1[H]	3mm	220kPa*	91g**
FMA-C4V3/LS8[H]			
FMA-C4V3/LS1[P]	9mm	120kPa*	104g**
FMA-C4V3/LS1[PLG]			
FMA-C4V3/LF1[P]			
FMA-C4V3/LS8[P]			

Overall Dimensions

Mounting Method (Air Inlet/Fixing/Pose Adjustment)

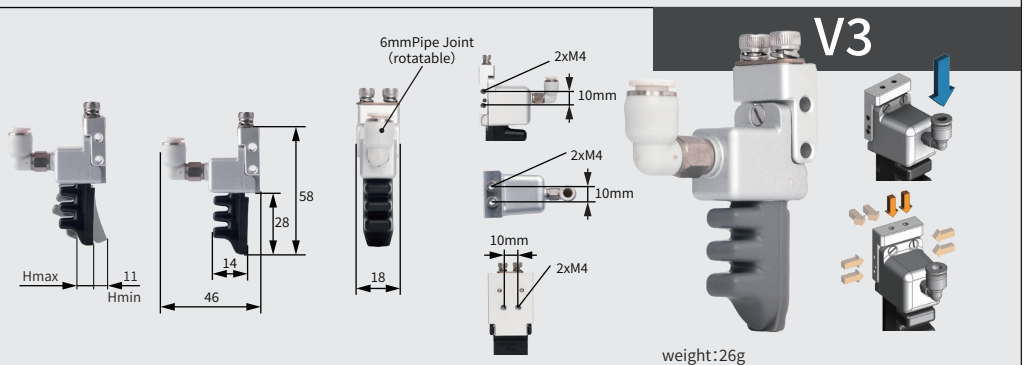

V3

weight:26g

Model	Vacuum Stroke Hmax	Safe Pressure	Theoretical Load
FMA-C4V2/LS1[H]	3mm	220kPa*	91g**
FMA-C4V2/LS8[H]			
FMA-C4V2/LS1[P]	9mm	120kPa*	104g**
FMA-C4V2/LS1[PLG]			
FMA-C4V2/LF1[P]			
FMA-C4V2/LS8[P]			

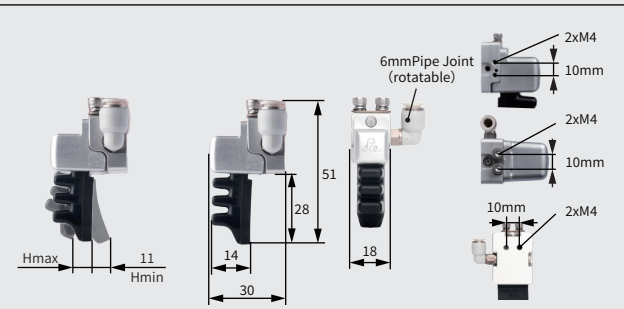

V2

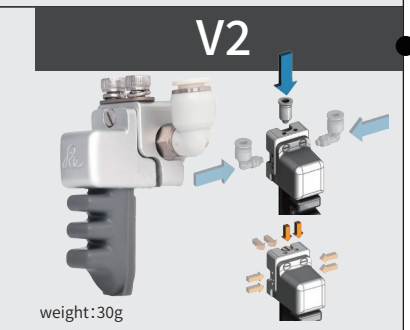

weight:30g

Model	Vacuum Stroke Hmax	Safe Pressure	Theoretical Load
FMA-C4V5/LS1[H]	3mm	220kPa*	91g**
FMA-C4V5/LS8[H]			
FMA-C4V5/LS1[P]	9mm	120kPa*	104g**
FMA-C4V5/LS1[PLG]			
FMA-C4V5/LF1[P]			
FMA-C4V5/LS8[P]			

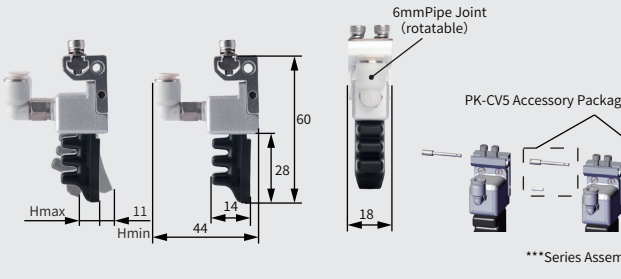

V5

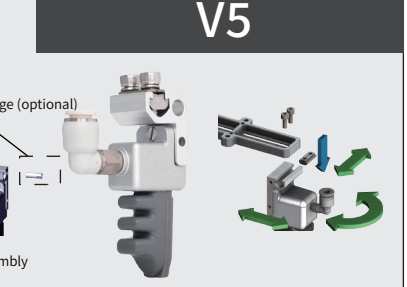

weight:30g

Model	Vacuum Stroke Hmax	Safe Pressure	Theoretical Load
FMA-C4V4/LS1[H]	3mm	220kPa*	91g**
FMA-C4V4/LS8[H]			
FMA-C4V4/LS1[P]	9mm	120kPa*	104g**
FMA-C4V4/LS1[PLG]			
FMA-C4V4/LF1[P]			
FMA-C4V4/LS8[P]			

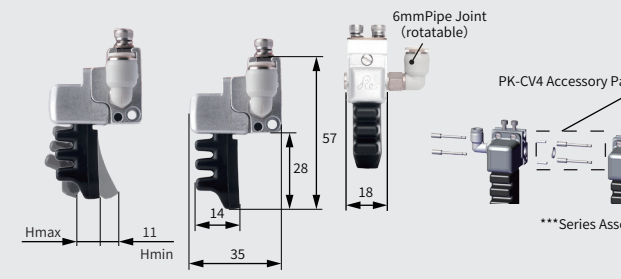

V4

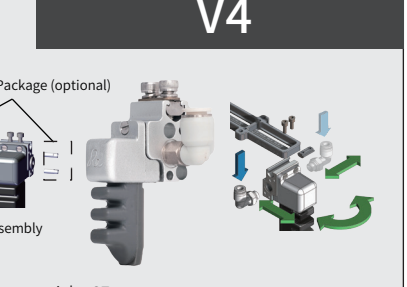

weight:37g

Model	Vacuum Stroke Hmax	Safe Pressure	Theoretical Load
FMA-C4V1/LS1[H]	6mm	220kPa*	182g**
FMA-C4V1/LS8[H]			
FMA-C4V1/LS1[P]	18mm	120kPa*	208g**
FMA-C4V1/LS1[PLG]			
FMA-C4V1/LF1[P]			
FMA-C4V1/LS8[P]			

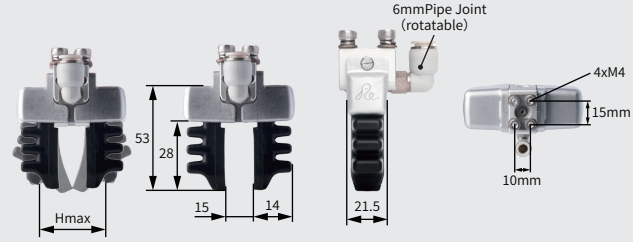

V1

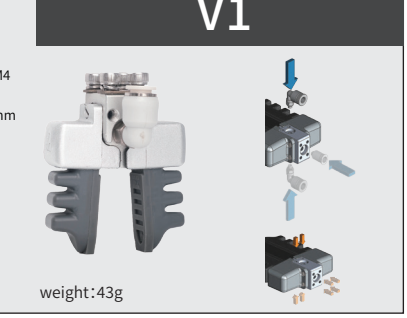

weight:43g

*Do not connect the flexible gripper directly to a high-pressure air supply. Overpressure operation will cause irreversible damage, sharply shorten service life or result in direct failure of the product. **The theoretical load is for selection reference only. The actual working load depends not only on the module model, but also on workpiece shape, wrapping performance during gripping, motion acceleration, surface friction coefficient and other factors. For actual gripping performance, please consult professional technical support for selection. ***Multiple flexible fingers can be combined in series to increase gripping force. The flexible finger module integrates air distribution function to enable seamless assembly between fingers. Only one air tube is required to drive multiple fingers simultaneously (shared air inlet), saving installation space. Assembling combined fingers requires accessory kit [PK] including bolts, nuts, sealing gaskets and pins. This kit is not included with flexible finger modules and must be purchased separately.

Number of Joints 1 2 3 4

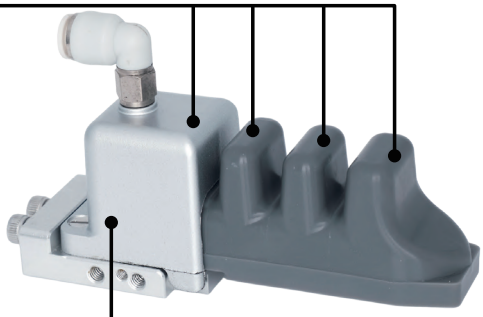

[P]	Flexible Type	Food-grade Soft Silicone
[PAS]	Reinforced Type	Food-grade Soft Rubber, Anti-adhesive & Dust-free
[PLG]	Anti-static Flexible Type	Anti-static Soft Rubber for Electronics Industry
[PLGAS]	Anti-static Flexible Non-marking Type	Anti-static Soft Rubber for Electronics Industry, Anti-adhesive & Dust-free
[H]	Reinforced Type	Reinforced Food-grade Soft Rubber
[HAS]	Reinforced Non-marking Type	Reinforced Food-grade Soft Rubber, Anti-adhesive & Dust-free
[HLG]	Anti-static Reinforced Type	Anti-static Soft Rubber for Electronics Industry
[HLGAS]	Anti-static Reinforced Non-marking Type	Anti-static Soft Rubber for Electronics Industry, Anti-adhesive & Dust-free

FMA-	Finger Width	Finger Joint	Mounting Method	/	Grip Texture	Material
	C	4	V3		LS1	[H]

Grip Texture		Features	Shape	Dimension Drawing
Standard Version	LS1	Flat head with horizontal stripes, good versatility. Suitable for most working conditions.		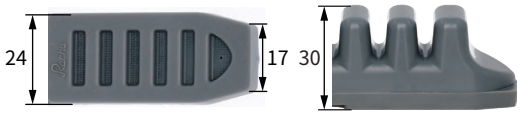
Extended Version	LF1	Flat head & flat base, suitable for dry smooth workpieces and soft food.	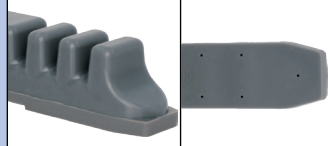	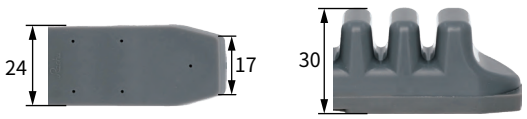
	LS8	Wedge-shaped tooth pattern, suitable for flat products such as PCBs, panels, automotive lamps, etc.	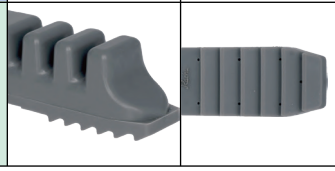	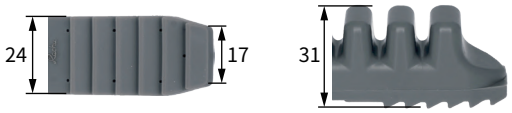

FMA-**C5 Finger Series**

Model	Vacuum Stroke Hmax	Safe Pressure	Theoretical Load
FMA-C5V3/LS1[H]	8mm	220kPa*	91g**
FMA-C5V3/LS1[P]	12mm	120kPa*	98g**
FMA-C5V3/LF1[P]			
FMA-C5V3/LS8[P]			
FMA-C5V3/FS3[P]			

Overall Dimensions

Mounting Method (Air Inlet/Fixing/Pose Adjustment)

V3

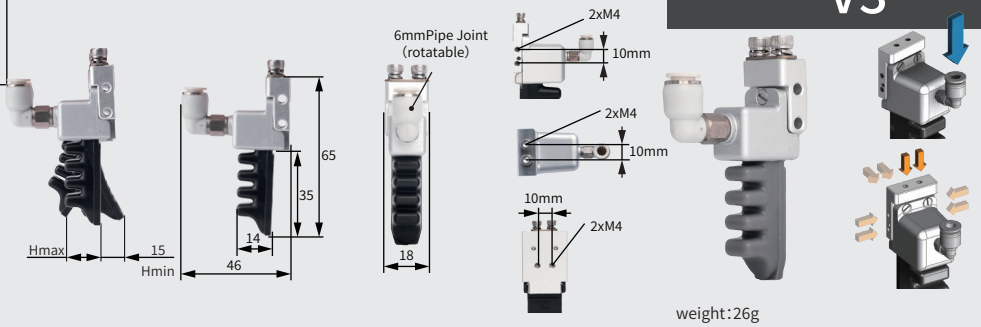

weight:26g

Model	Vacuum Stroke Hmax	Safe Pressure	Theoretical Load
FMA-C5V2/LS1[H]	8mm	220kPa*	91g**
FMA-C5V2/LS1[P]	12mm	120kPa*	98g**
FMA-C5V2/LF1[P]			
FMA-C5V2/LS8[P]			
FMA-C5V2/FS3[P]			

V2

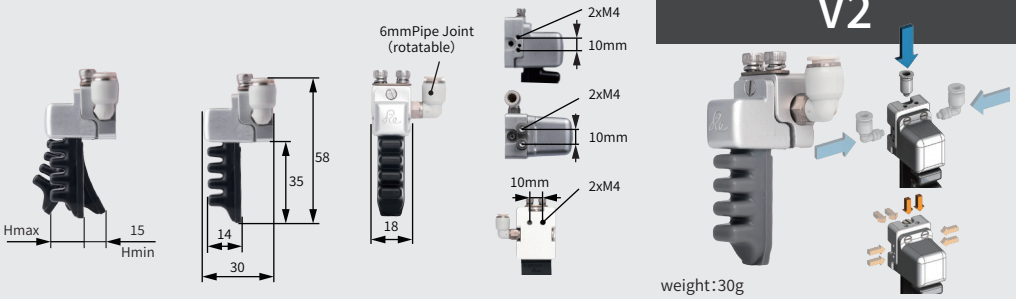

weight:30g

Model	Vacuum Stroke Hmax	Safe Pressure	Theoretical Load
FMA-C5V5/LS1[H]	8mm	220kPa*	91g**
FMA-C5V5/LS1[P]	12mm	120kPa*	98g**
FMA-C5V5/LF1[P]			
FMA-C5V5/LS8[P]			
FMA-C5V5/FS3[P]			

V5

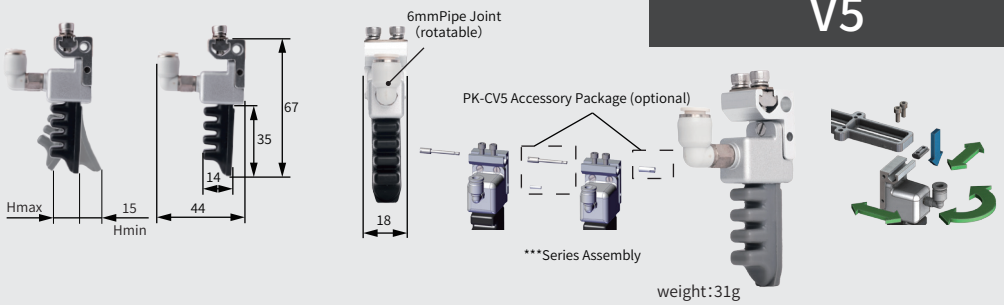

weight:31g

Model	Vacuum Stroke Hmax	Safe Pressure	Theoretical Load
FMA-C5V4/LS1[H]	8mm	220kPa*	91g**
FMA-C5V4/LS1[P]	12mm	120kPa*	98g**
FMA-C5V4/LF1[P]			
FMA-C5V4/LS8[P]			
FMA-C5V4/FS3[P]			

V4

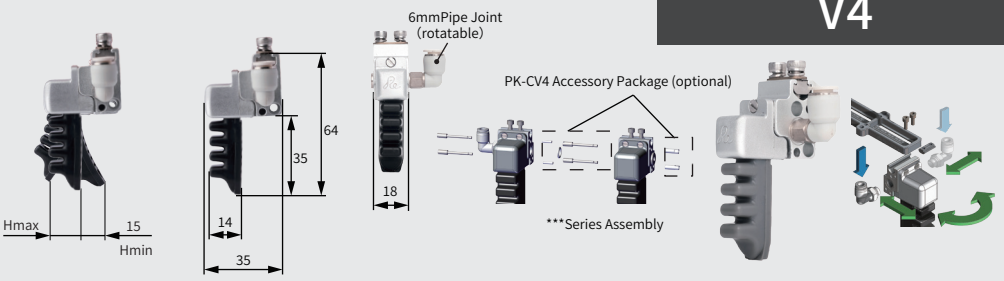

weight:38g

Model	Vacuum Stroke Hmax	Safe Pressure	Theoretical Load
FMA-C5V1/LS1[H]	16mm	220kPa*	182g**
FMA-C5V1/LS1[P]	24mm	120kPa*	196g**
FMA-C5V1/LF1[P]			
FMA-C5V1/LS8[P]			
FMA-C5V1/FS3[P]			

V1

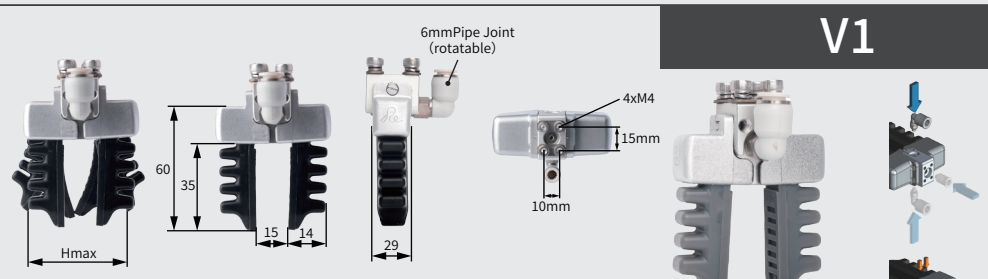

weight:44g

*Do not connect the flexible gripper directly to a high-pressure air supply. Overpressure operation will cause irreversible damage, sharply shorten service life or result in direct failure of the product. **The theoretical load is for selection reference only. The actual working load depends not only on the module model, but also on workpiece shape, wrapping performance during gripping, motion acceleration, surface friction coefficient and other factors. For actual gripping performance, please consult professional technical support for selection. ***Multiple flexible fingers can be combined in series to increase gripping force. The flexible finger module integrates air distribution function to enable seamless assembly between fingers. Only one air tube is required to drive multiple fingers simultaneously (shared air inlet), saving installation space. Assembling combined fingers requires accessory kit [PK] including bolts, nuts, sealing gaskets and pins. This kit is not included with flexible finger modules and must be purchased separately.

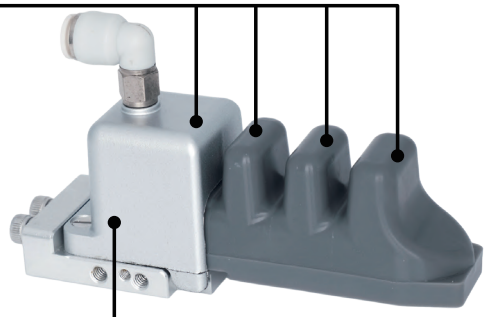

[P]	Flexible Type	Food-grade Soft Silicone
[PAS]	Reinforced Type	Food-grade Soft Rubber, Anti-adhesive & Dust-free
[PLG]	Anti-static Flexible Type	Anti-static Soft Rubber for Electronics Industry
[PLGAS]	Anti-static Flexible Non-marking Type	Anti-static Soft Rubber for Electronics Industry, Anti-adhesive & Dust-free
[H]	Reinforced Type	Reinforced Food-grade Soft Rubber
[HAS]	Reinforced Non-marking Type	Reinforced Food-grade Soft Rubber, Anti-adhesive & Dust-free
[HLG]	Anti-static Reinforced Type	Anti-static Soft Rubber for Electronics Industry
[HLGAS]	Anti-static Reinforced Non-marking Type	Anti-static Soft Rubber for Electronics Industry, Anti-adhesive & Dust-free

FMA-	Finger Width	Finger Joint	Mounting Method	/	Grip Texture	Material
	C	4	V3		LS1	[H]

Grip Texture		Features	Shape	Dimension Drawing
Standard Version	LS1	Flat head with horizontal stripes, good versatility. Suitable for most working conditions.		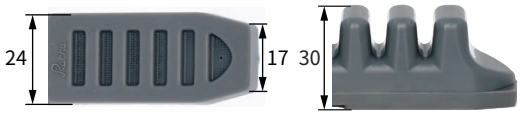
Extended Version	LF1	Flat head & flat base, suitable for dry smooth workpieces and soft food.	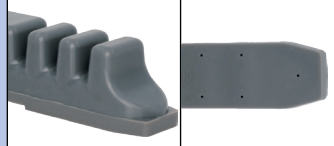	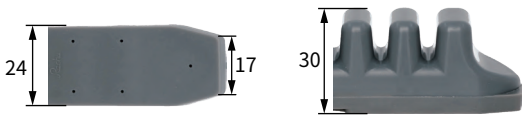
	LS8	Wedge-shaped tooth pattern, suitable for flat products such as PCBs, panels, automotive lamps, etc.		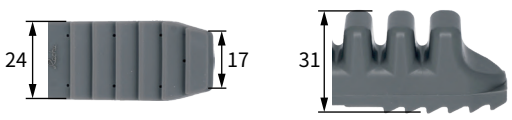
	FS3	Lip head with corrugated texture, suitable for soft textiles.		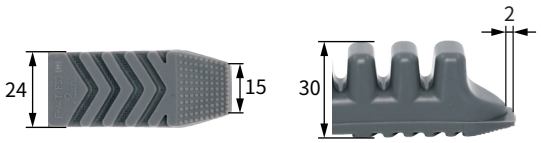

FMA-**C6 Finger Series**

V3

Model	Vacuum Stroke Hmax	Safe Pressure	Theoretical Load
FMA-C6V3/LS1[H] ~~FMA-~~C6V3/LS1[HLG]	10mm	220kPa*	77g**
FMA-C6V3/LS1[P]	20mm	120kPa*	71g**

Overall Dimensions

Mounting Method (Air Inlet/Fixing/Pose Adjustment)

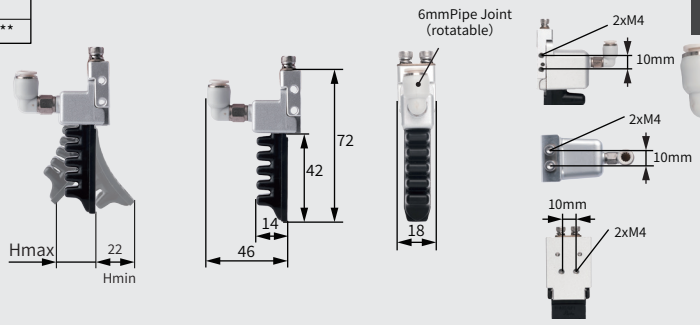

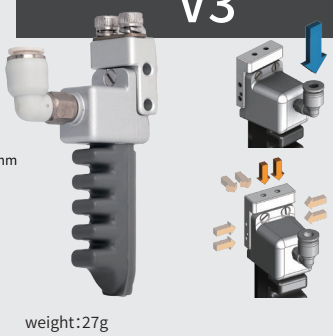

weight:27g

V2

Model	Vacuum Stroke Hmax	Safe Pressure	Theoretical Load
FMA-C6V2/LS1[H] FMA-C6V2/LS1[HLG]	10mm	220kPa*	77g**
FMA-C6V2/LS1[P]	20mm	120kPa*	71g**

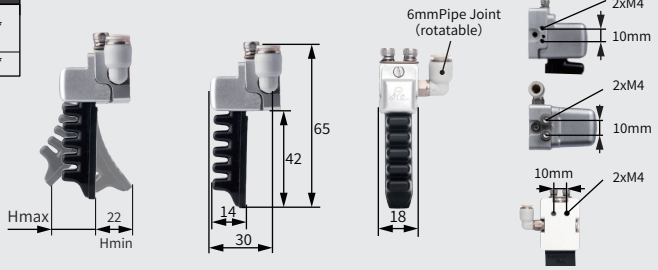

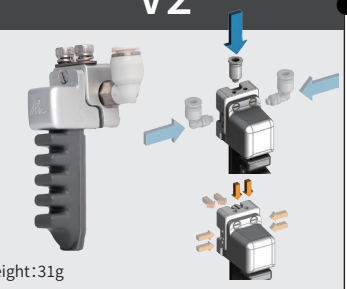

weight:31g

V5

Model	Vacuum Stroke Hmax	Safe Pressure	Theoretical Load
FMA-C6V5/LS1[H] FMA-C6V5/LS1[HLG]	10mm	220kPa*	77g**
FMA-C6V5/LS1[P]	20mm	120kPa*	71g**

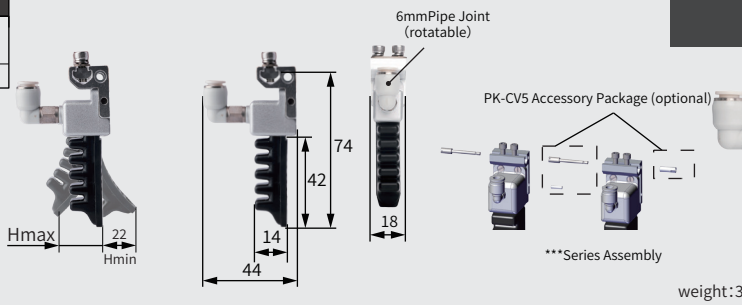

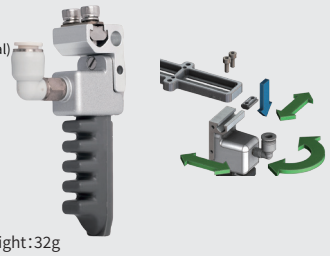

weight:32g

V4

Model	Vacuum Stroke Hmax	Safe Pressure	Theoretical Load
FMA-C6V4/LS1[H] FMA-C6V4/LS1[HLG]	10mm	220kPa*	77g**
FMA-C6V4/LS1[P]	20mm	120kPa*	71g**

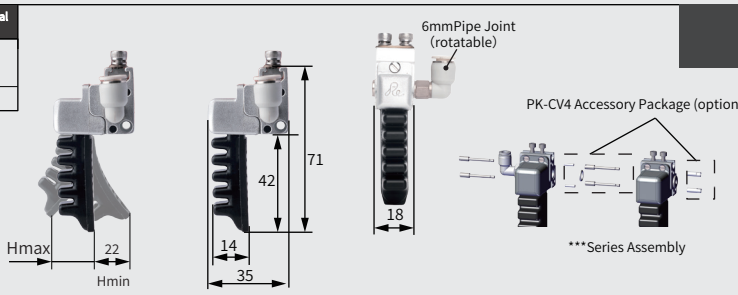

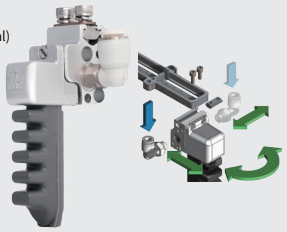

weight:39g

V1

Model	Vacuum Stroke Hmax	Safe Pressure	Theoretical Load
FMA-C6V1/LS1[H] FMA-C6V1/LS1[HLG]	20mm	220kPa*	154g**
FMA-C6V1/LS1[P]	40mm	120kPa*	142g**

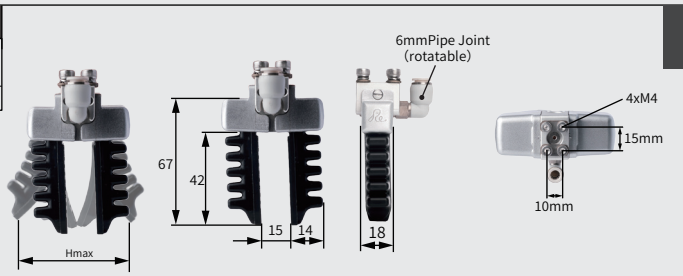

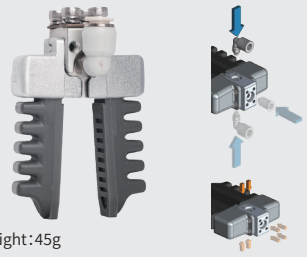

weight:45g

*Do not connect the flexible gripper directly to a high-pressure air supply. Overpressure operation will cause irreversible damage, sharply shorten service life or result in direct failure of the product. **The theoretical load is for selection reference only. The actual working load depends not only on the module model, but also on workpiece shape, wrapping performance during gripping, motion acceleration, surface friction coefficient and other factors. For actual gripping performance, please consult professional technical support for selection. ***Multiple flexible fingers can be combined in series to increase gripping force. The flexible finger module integrates air distribution function to enable seamless assembly between fingers. Only one air tube is required to drive multiple fingers simultaneously (shared air inlet), saving installation space. Assembling combined fingers requires accessory kit [PK] including bolts, nuts, sealing gaskets and pins. This kit is not included with flexible finger modules and must be purchased separately.

Number of Joints 1 2 3 4

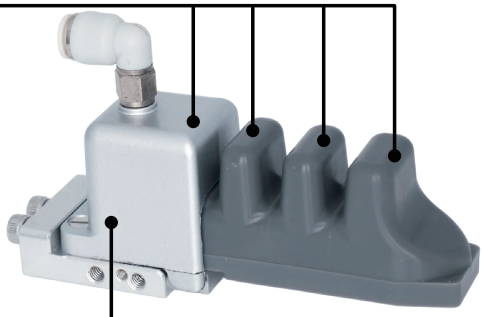

FMA-	Finger Width	Finger Joint	Mounting Method	/	Grip Texture	Material
	C	4	V3		LS1	[H]

[P]	Flexible Type	Food-grade Soft Silicone
[PAS]	Reinforced Type	Food-grade Soft Rubber, Anti-adhesive & Dust-free
[PLG]	Anti-static Flexible Type	Anti-static Soft Rubber for Electronics Industry
[PLGAS]	Anti-static Flexible Non-marking Type	Anti-static Soft Rubber for Electronics Industry, Anti-adhesive & Dust-free
[H]	Reinforced Type	Reinforced Food-grade Soft Rubber
[HAS]	Reinforced Non-marking Type	Reinforced Food-grade Soft Rubber, Anti-adhesive & Dust-free
[HLG]	Anti-static Reinforced Type	Anti-static Soft Rubber for Electronics Industry
[HLGAS]	Anti-static Reinforced Non-marking Type	Anti-static Soft Rubber for Electronics Industry, Anti-adhesive & Dust-free

Grip Texture		Features	Shape	Dimension Drawing
Standard Version	LS1	Flat head with horizontal stripes, good versatility. Suitable for most working conditions.		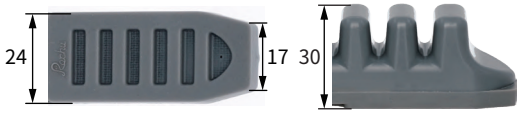

FMA-**C3 Finger Series**

Model	Vacuum Stroke Hmax	Safe Pressure	Theoretical Load
FMA-C7V3/LS1[H]	13mm	220kPa*	78g**
FMA-C7V3/LS1[P]	29mm	120kPa*	70g**
FMA-C7V3/LF1[P]			

Overall Dimensions

Mounting Method (Air Inlet/Fixing/Pose Adjustment)

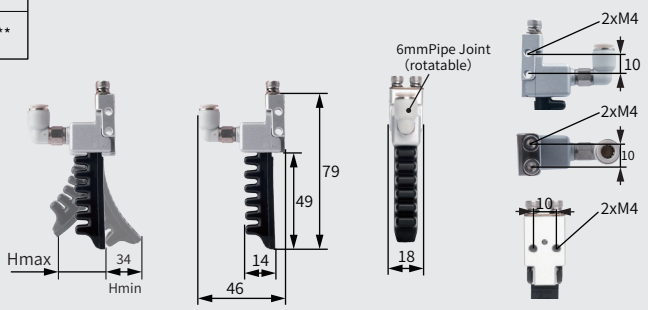

V3

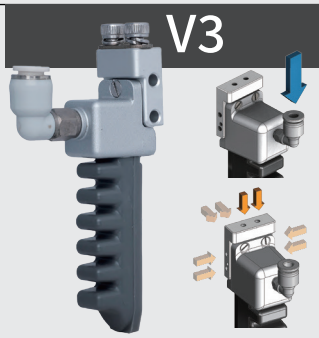

weight:28g

Model	Vacuum Stroke Hmax	Safe Pressure	Theoretical Load
FMA-C7V2/LS1[H]	13mm	220kPa*	78g**
FMA-C7V2/LS1[P]	29mm	120kPa*	70g**
FMA-C7V2/LF1[P]			

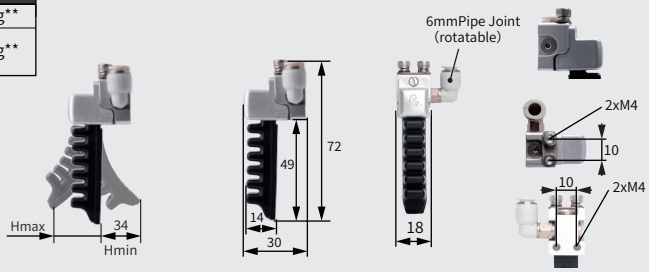

V2

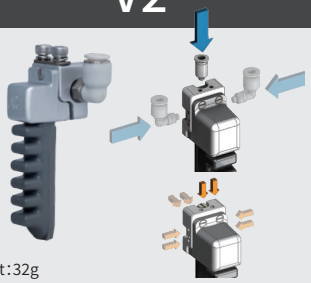

weight:32g

Model	Vacuum Stroke Hmax	Safe Pressure	Theoretical Load
FMA-C7V5/LS1[H]	13mm	220kPa*	78g**
FMA-C7V5/LS1[P]	29mm	120kPa*	70g**
FMA-C7V5/LF1[P]			

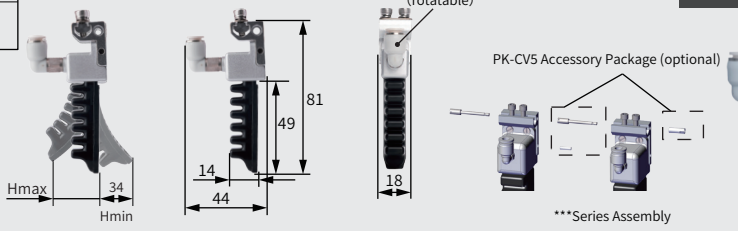

V5

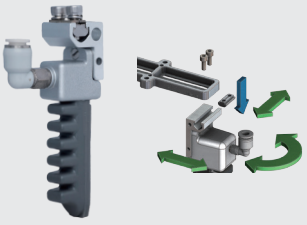

weight:33g

Model	Vacuum Stroke Hmax	Safe Pressure	Theoretical Load
FMA-C7V4/LS1[H]	13mm	220kPa*	78g**
FMA-C7V4/LS1[P]	29mm	120kPa*	70g**
FMA-C7V4/LF1[P]			

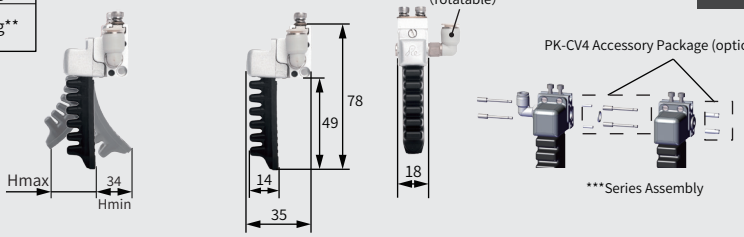

V4

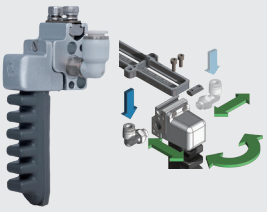

weight:40g

Model	Vacuum Stroke Hmax	Safe Pressure	Theoretical Load
FMA-C7V1/LS1[H]	26mm	220kPa*	156g**
FMA-C7V1/LS1[P]	58mm	120kPa*	140g**
FMA-C7V1/LF1[P]			

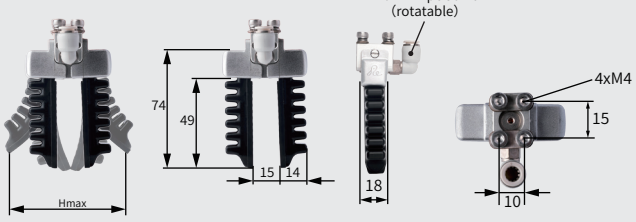

V1

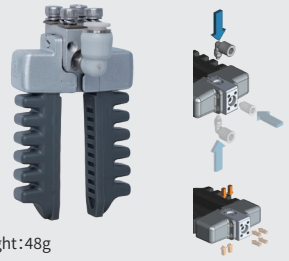

weight:48g

*Do not connect the flexible gripper directly to a high-pressure air supply. Overpressure operation will cause irreversible damage, sharply shorten service life or result in direct failure of the product. **The theoretical load is for selection reference only. The actual working load depends not only on the module model, but also on workpiece shape, wrapping performance during gripping, motion acceleration, surface friction coefficient and other factors. For actual gripping performance, please consult professional technical support for selection. ***Multiple flexible fingers can be combined in series to increase gripping force. The flexible finger module integrates air distribution function to enable seamless assembly between fingers. Only one air tube is required to drive multiple fingers simultaneously (shared air inlet), saving installation space. Assembling combined fingers requires accessory kit [PK] including bolts, nuts, sealing gaskets and pins. This kit is not included with flexible finger modules and must be purchased separately.

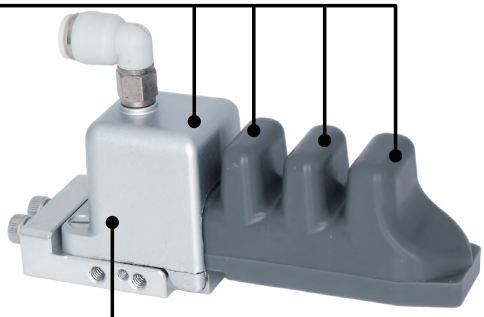

	Finger Width	Finger Joint	Mounting Method		Grip Texture	Material
FMA-	A	4	V3	/	LS1	[H]

[P]	Flexible Type	Food-grade Soft Silicone
[PAS]	Reinforced Type	Food-grade Soft Rubber, Anti-adhesive & Dust-free
[PLG]	Anti-static Flexible Type	Anti-static Soft Rubber for Electronics Industry
[PLGAS]	Anti-static Flexible Non-marking Type	Anti-static Soft Rubber for Electronics Industry, Anti-adhesive & Dust-free
[H]	Reinforced Type	Reinforced Food-grade Soft Rubber
[HAS]	Reinforced Non-marking Type	Reinforced Food-grade Soft Rubber, Anti-adhesive & Dust-free
[HLG]	Anti-static Reinforced Type	Anti-static Soft Rubber for Electronics Industry
[HLGAS]	Anti-static Reinforced Non-marking Type	Anti-static Soft Rubber for Electronics Industry, Anti-adhesive & Dust-free

Grip Texture		Features	Shape	Dimension Drawing
Standard Version	LS1	Flat head with horizontal stripes, good versatility. Suitable for most working conditions.		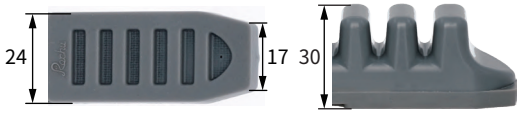
Extended Version	LF1	Flat head & flat base, suitable for dry smooth workpieces and soft food.		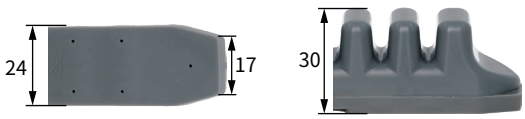

FMA-**C8 Finger Series**

Model	Vacuum Stroke Hmax	Safe Pressure	Theoretical Load
FMA-C8V3/LS1[H]	16mm	22kPa*	75g**
FMA-C8V3/LS1[P]	38mm	120kPa*	54g**

Overall Dimensions

Mounting Method (Air Inlet/Fixing/Pose Adjustment)

V3

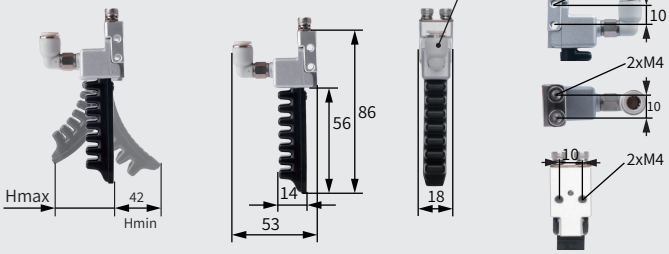

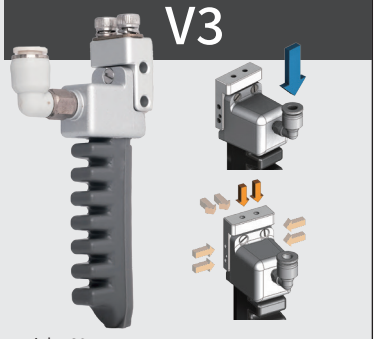

weight:29g

Model	Vacuum Stroke Hmax	Safe Pressure	Theoretical Load
FMA-C8V2/LS1[H]	16mm	220kPa*	75g**
FMA-C8V2/LS1[P]	38mm	120kPa*	54g**

V2

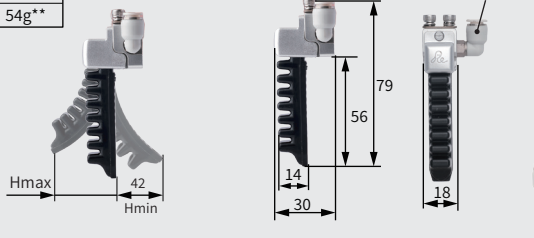

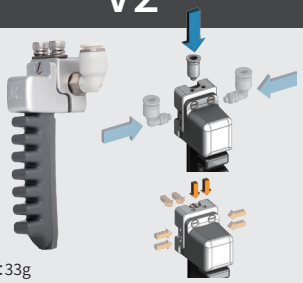

weight:33g

Model	Vacuum Stroke Hmax	Safe Pressure	Theoretical Load
FMA-C8V5/LS1[H]	16mm	220kPa*	75g**
FMA-C8V5/LS1[P]	38mm	120kPa*	54g**

V5

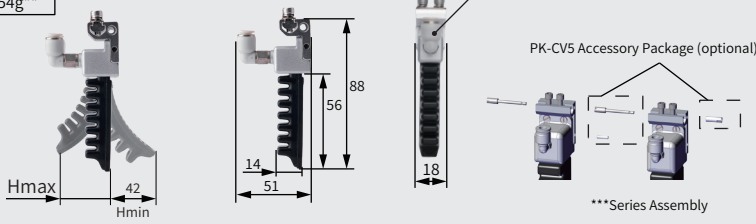

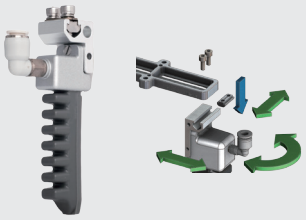

weight:33g

Model	Vacuum Stroke Hmax	Safe Pressure	Theoretical Load
FMA-C8V4/LS1[H]	16mm	220kPa*	75g**
FMA-C8V4/LS1[P]	38mm	120kPa*	54g**

V4

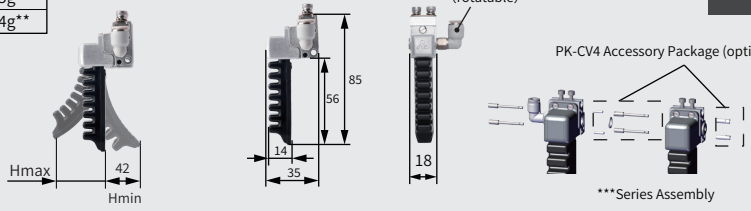

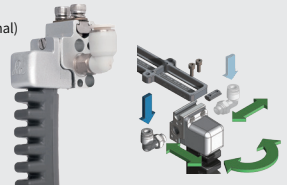

weight:40g

Model	Vacuum Stroke Hmax	Safe Pressure	Theoretical Load
FMA-C8V1/LS1[H]	32mm	220kPa*	150g**
FMA-C8V1/LS1[P]	76mm	120kPa*	108g**

V1

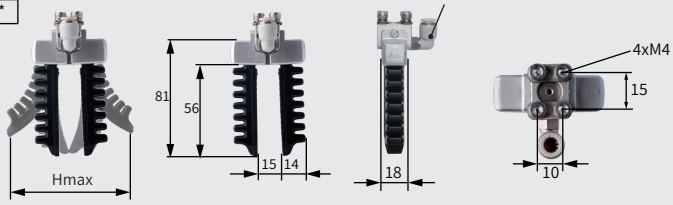

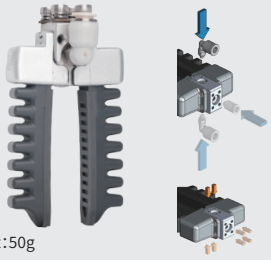

weight:50g

*Do not connect the flexible gripper directly to a high-pressure air supply. Overpressure operation will cause irreversible damage, sharply shorten service life or result in direct failure of the product. **The theoretical load is for selection reference only. The actual working load depends not only on the module model, but also on workpiece shape, wrapping performance during gripping, motion acceleration, surface friction coefficient and other factors. For actual gripping performance, please consult professional technical support for selection. ***Multiple flexible fingers can be combined in series to increase gripping force. The flexible finger module integrates air distribution function to enable seamless assembly between fingers. Only one air tube is required to drive multiple fingers simultaneously (shared air inlet), saving installation space. Assembling combined fingers requires accessory kit [PK] including bolts, nuts, sealing gaskets and pins. This kit is not included with flexible finger modules and must be purchased separately.

Number of Joints 1 2 3 4

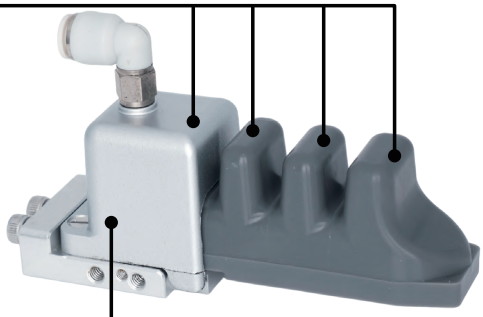

[P]	Flexible Type	Food-grade Soft Silicone
[PAS]	Reinforced Type	Food-grade Soft Rubber, Anti-adhesive & Dust-free
[PLG]	Anti-static Flexible Type	Anti-static Soft Rubber for Electronics Industry
[PLGAS]	Anti-static Flexible Non-marking Type	Anti-static Soft Rubber for Electronics Industry, Anti-adhesive & Dust-free
[H]	Reinforced Type	Reinforced Food-grade Soft Rubber
[HAS]	Reinforced Non-marking Type	Reinforced Food-grade Soft Rubber, Anti-adhesive & Dust-free
[HLG]	Anti-static Reinforced Type	Anti-static Soft Rubber for Electronics Industry
[HLGAS]	Anti-static Reinforced Non-marking Type	Anti-static Soft Rubber for Electronics Industry, Anti-adhesive & Dust-free

FMA-	Finger Width	Finger Joint	Mounting Method	/	Grip Texture	Material
	C	4	V3		LS1	[H]

Grip Texture		Features	Shape	Dimension Drawing
Standard Version	LS1	Flat head with horizontal stripes, good versatility. Suitable for most working conditions.		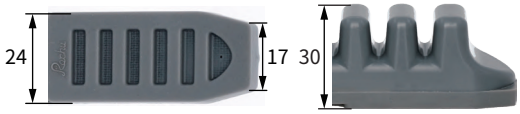

Characteristic parameter: Adjustment and calculation method of gripping force of finger module

When the finger module is inflated, it bends inward and generates a horizontal gripping force FG when contacting the gripped workpiece. This gripping force is related to the shape of the workpiece, the type of finger, the contact area between the finger and the workpiece, the installation fingertip distance Dn (page. 59), and the working air pressure P.

Take FMA-A5 finger module (normal material) as an example to clamp a square workpiece under different working conditions. Th e width of the workpiece is W = 80mm, and the covering length of the fingertip is LG = 20mm:

Working condition 1:	Working condition 2:
Installation fingertip distance Dn=80[mm]	Installation fingertip distance Dn=50[mm]
Working pressure P=80[kPa]	Working pressure P=120[kPa]

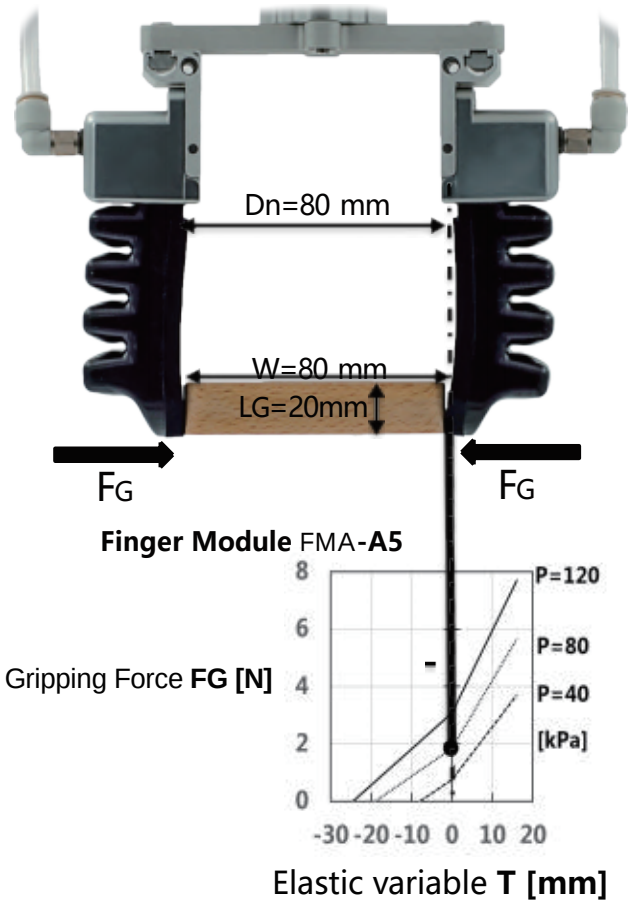

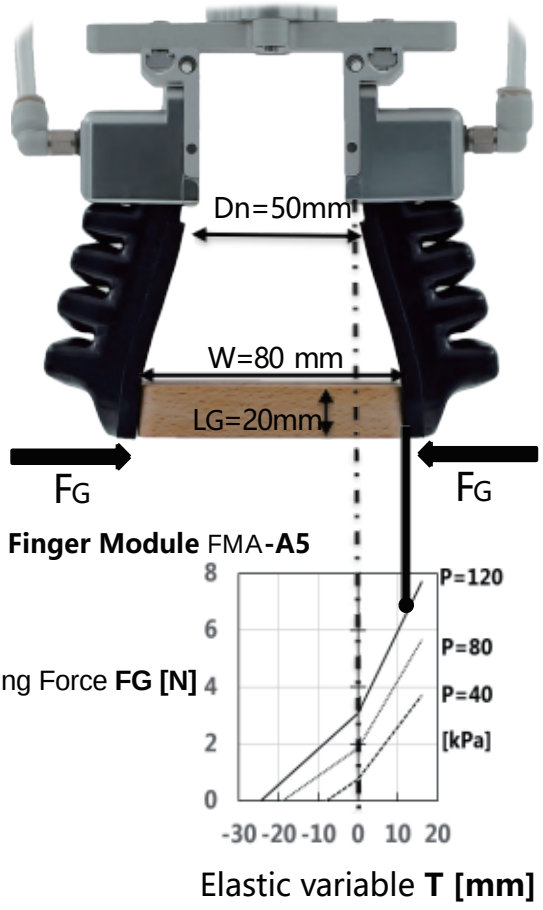

	When the workpiece width W>installation fingertip distance Dn
Elastic variable T=(W-Dn)/2=0	Elastic variable T=(W-Dn)/2=15[mm]
Gripping Force FG=1.85[N]	Gripping force FG=7.3[N]

1, Higher working pressure P, higher Gripping force FG.
2, Shorter finger distance Dn, higher Gripping force FG.
3, Bigger finger size, higher Gripping force FG.
4, The strong material finger can hold higher air pressure and has a stronger force than the normal material finger.
5, Exceeding the safe working pressure will cause irreversible damage to the soft finger and a shorter lifetime, while shorter Dn may increase the abrasion of the finger bottom.
6, More fingers in series (Page. 37,39) can also improve the overall Gripping force.
7, Besides the Gripping force FG, the real handling load of the gripper is also related to the shape of the object, friction coefficient, finger bottom print, machine speed, etc.

Gripping Force Characteristic Curve Type A of Soft Finger Module

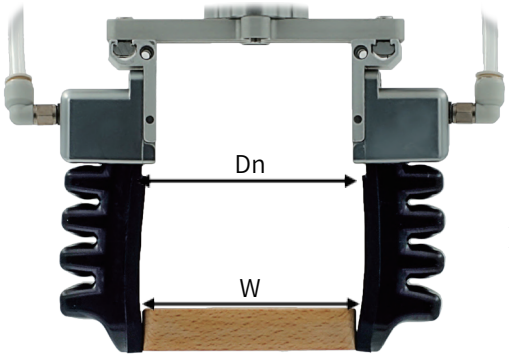

Elastic deformationT=(W-Dn)/2=0[mm]

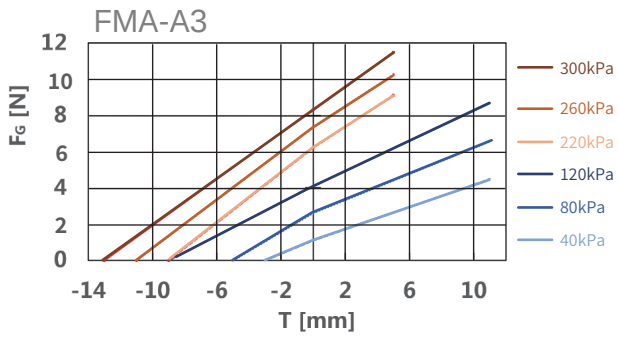

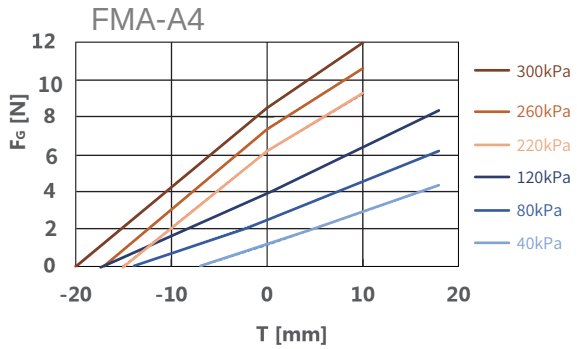

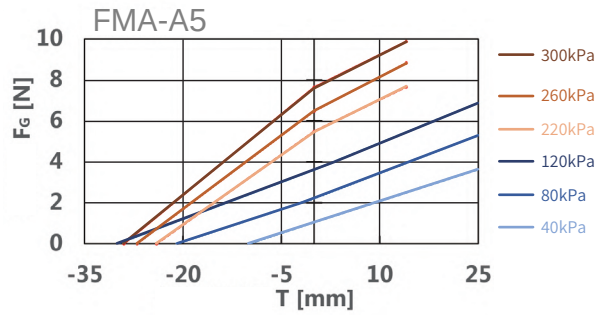

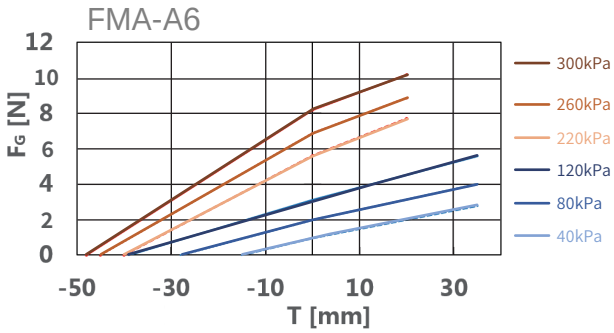

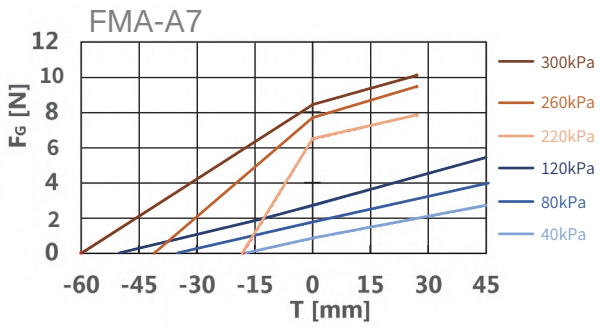

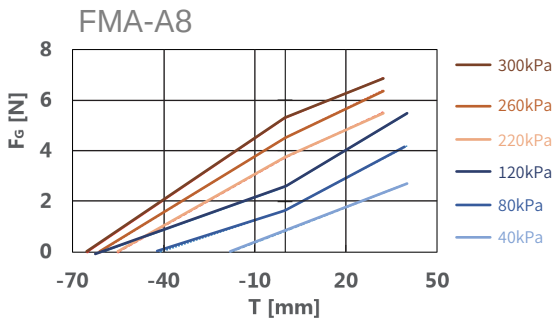

The relevant values in the curve are determined under the following conditions:

- Finger material: normal material, strong material;
- Use square workpiece, finger pattern LS1;
- Only the fingertip part is in contact with the workpiece, and the fingertip covering length LG = 10mm;
- The following data is for reference only. Under other working conditions, the values will be different.

Gripping Force Characteristic Curve Type B of Soft Finger Module

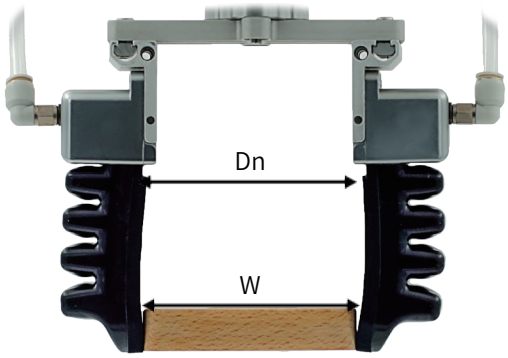

Elastic deformationT=(W-Dn)/2=0[mm]

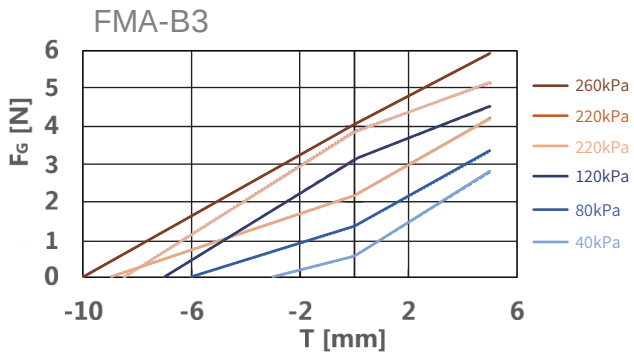

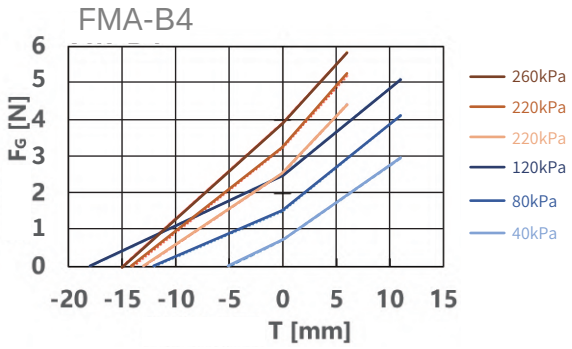

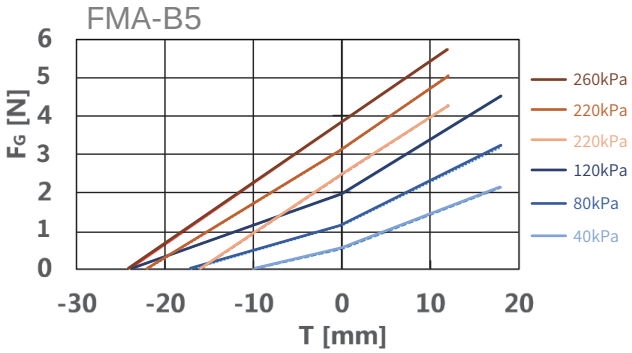

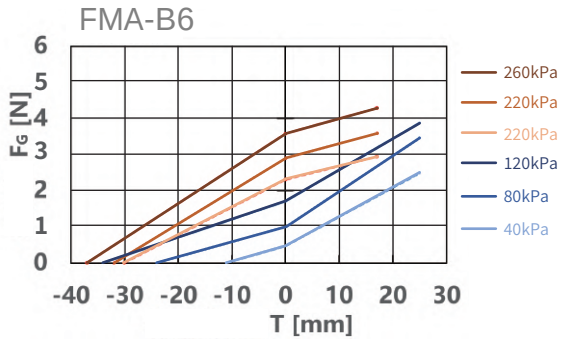

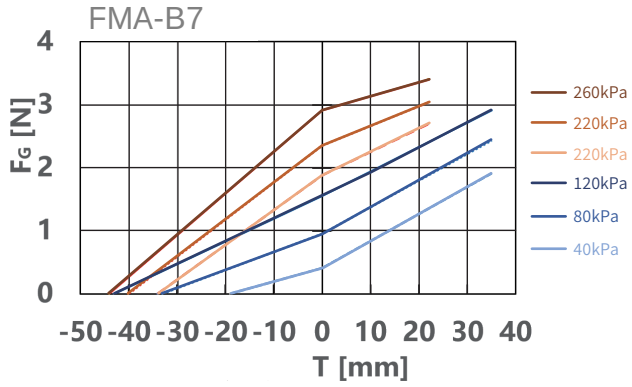

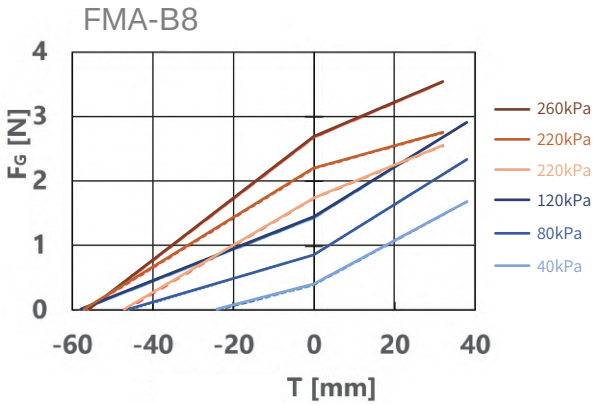

The relevant values in the curve are determined under the following conditions:

- Finger material: normal material, strong material;
- Use square workpiece, finger pattern LS1;
- Only the fingertip part is in contact with the workpiece, and the fingertip covering length LG = 10mm;
- The following data is for reference only. Under other working conditions, the values will be different.

Gripping Force Characteristic Curve Type C of Soft Finger Module

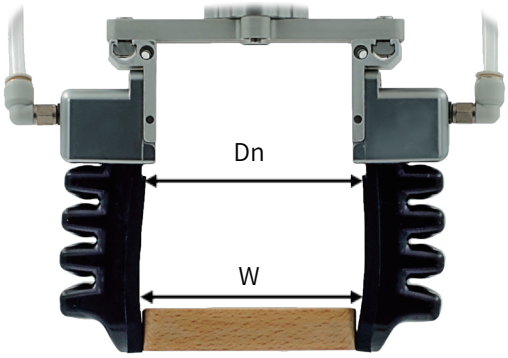

Elastic deformationT=(W-Dn)/2=0[mm]

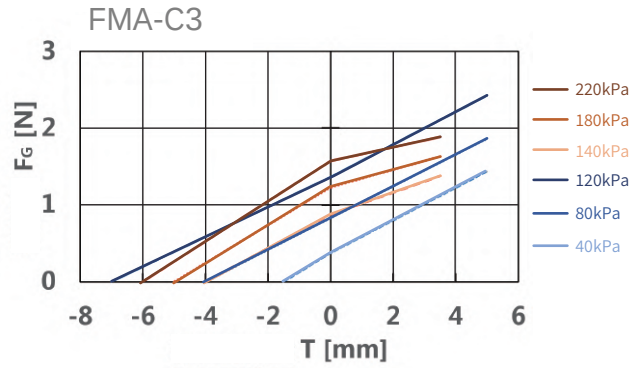

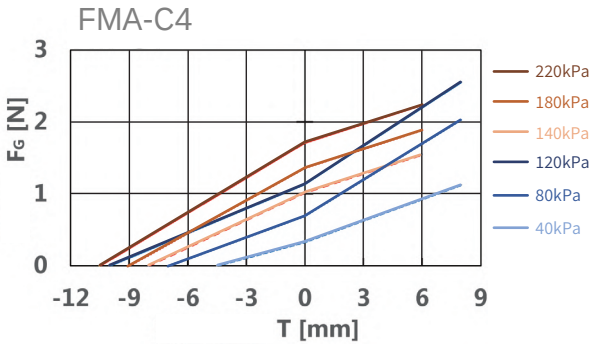

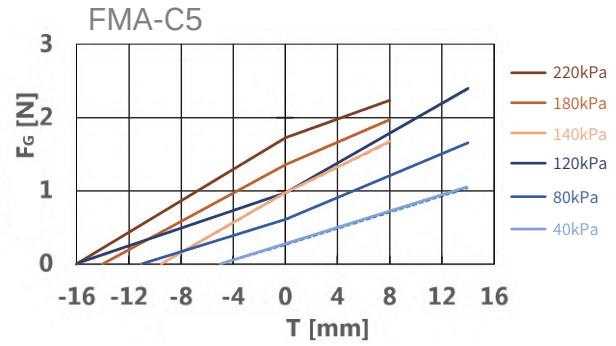

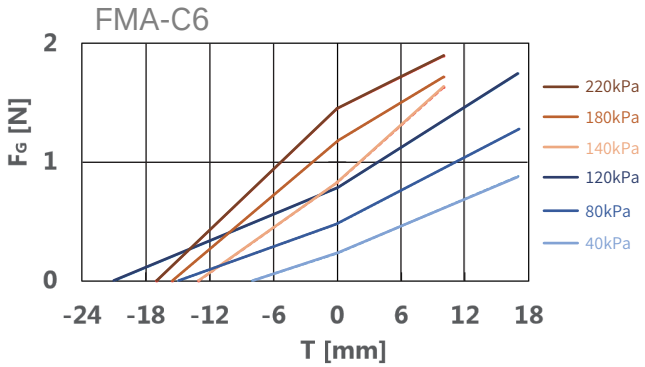

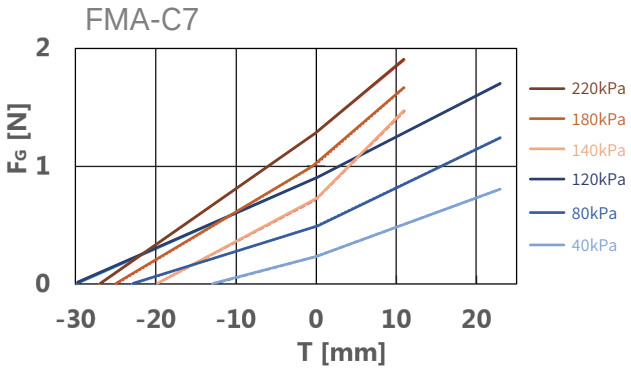

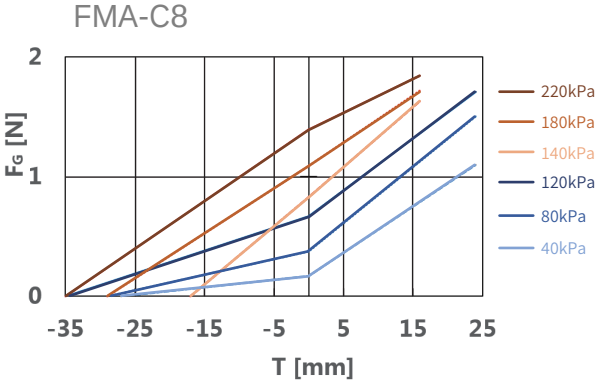

The relevant values in the curve are determined under the following conditions:

- Finger material: normal material, strong material;
- Use square workpiece, finger pattern LS1;
- Only the fingertip part is in contact with the workpiece, and the fingertip covering length LG = 10mm;
- The following data is for reference only. Under other working conditions, the values will be different.

EAO

Electronices and Optices



SE-FP Series

Flexible bone probe



SE-OF Series

Optical fiber signal amplifier



EC-76

Thin-film Solid-state Relay

SE-FP Series Flexible bone probe

- Non-contact diffuse reflection optical sensor for part missing detection.
- Multiple sizes and installation methods are available, which can be adapted to soft beaks[BM], soft fingers [FMA], or other end effectors.
- The probe angle can be bent to quickly adapt to different workpieces.
- Combined with Rochu SE-FP series fiber optic amplifiers, the detection distance is 2-50mm.
- Operating ambient temperature is -20～90℃.



Scan to watch video

Model		SE-FP31	SE-FP31L	SE-FP32	SE-FP32L	SE-FP34	SE-FP34L	SE-FP35	SE-FP35L
Installation aperture		G1/8		M5		M3		M3	
Adapter joint PN *		PN-CW18W18L		PN-CW5W5L		—		—	
Fiber Pigtail Length L		1500mm	2500mm	1500mm	2500mm	1500mm	2500mm	1500mm	2500mm
Self-weight		9.1g	11g	5.8g	7.5g	7.5g	9.1g	7.5g	9.1g
Detection distance	Standard whiteboard	60mm		60mm		80mm		80mm	
	Grey board	30mm		30mm		40mm		40mm	
	Standard blackboard	5mm		5mm		5mm		5mm	

*: For other models of adaptable installation joints, please consult the account manager.

SE-FP31 Series

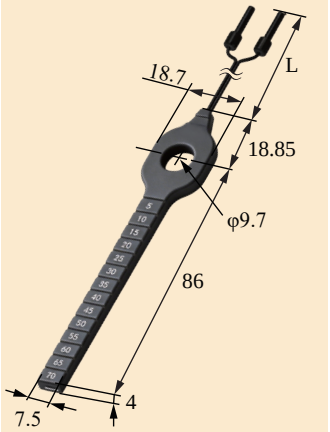

SE-FP32 Series

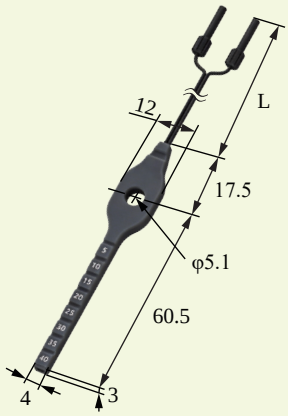

SE-FP34 Series

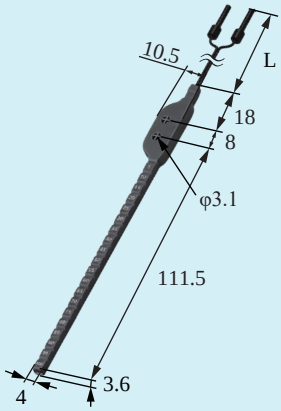

SE-FP35 Series

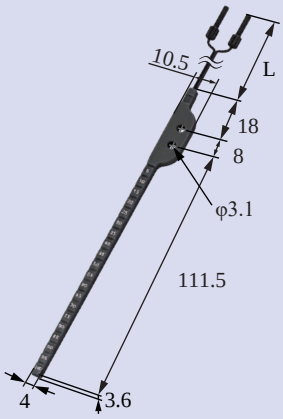

Installation method

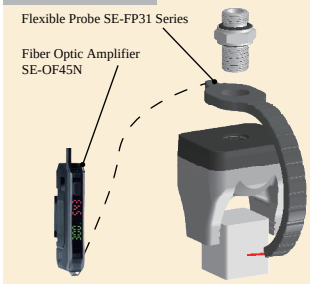

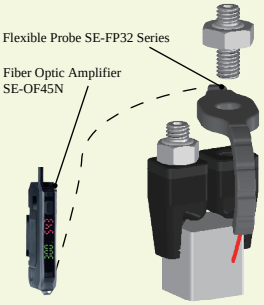

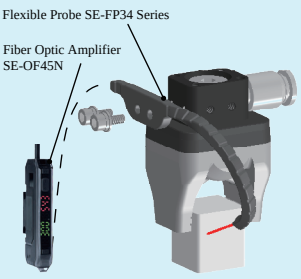

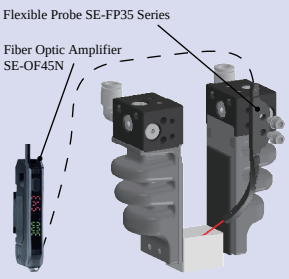

Adjustment method

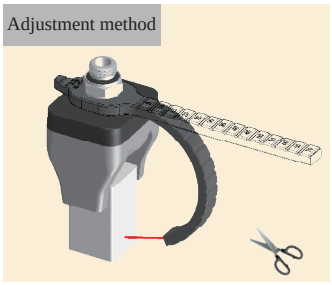

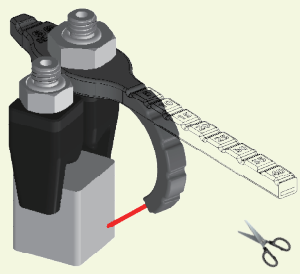

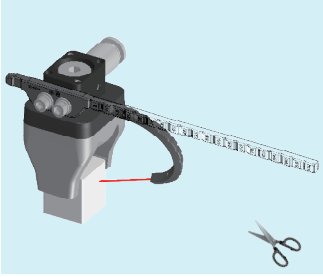

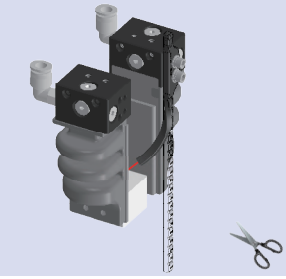

- Bend the probe to point towards the workpiece (bending radius not less than 10mm). It is recommended to maintain a distance of 2-50mm between the probe tip and the workpiece.
- If the probe is too long, it can be trimmed. Please strictly follow the instructions in the manual for the trimming method.
- Black and transparent workpieces will produce lower diffuse reflection values, so the distance between the probe tip and the workpiece should be adjusted accordingly.

SE-OF series Optical fiber signal amplifier



- High-precision double digital display, NPN or PNP output
- Compatible with SE-FP series flexible probes
- One-click setting for workpiece presence detection

Model	SE-OF45N	SE-OF45P
Type	NPN output, 1 output port, lead wire extraction type.	PNP output, 1 output port, lead wire extraction type.
Light source	Red LED 625nm	
Detection Distance	2-50mm	
Reaction time (According to different power modes)	HIGH SPEED 25μS/FINE 250μs/TURB 4ms/SUPER 16ms /ULTR 32ms	
Output selection	Normally open LIGHT-ON / Normally close DARK-ON(Switch selection)	
Detection method	Light intensity	
Control output	Between 12 to 24VDC	
Power Consumption	36mA max	
Power supply	Standard mode: Maximum 860mW. Maximum voltage: 24V	
Power consumption	Incandescent lamp: Maximum: 20,000 lux. Daylight: Maximum: 30,000 lux	
Vibration resistance	10 to 55Hz, double amplitude: 1.5mm. For X, Y, and Z axes respectively, it is 2 hours	
Ambient temperature	-10°C to +55 °C, without freezing.	



NPN output

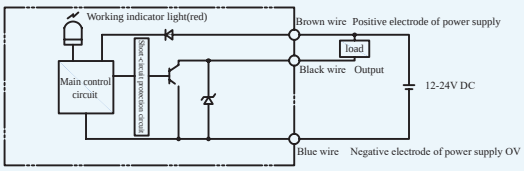

PNP output

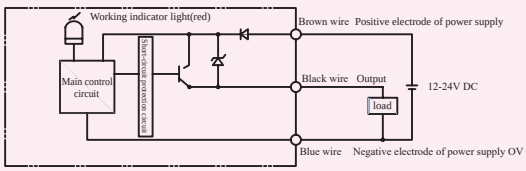

Installation block



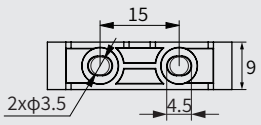

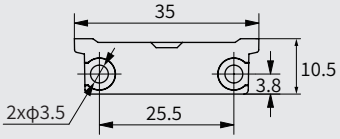

Connection mode

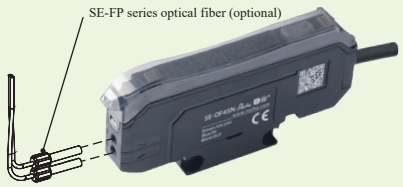

Threshold Setting

a. When there is no workpiece, press the SET key briefly

b. When there is a workpiece, press the SET key briefly

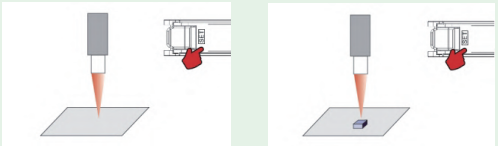

Setting completed
(The steps of a and b can be in reverse order)

Automatically set to the maximum sensitivity, which solves the problem of excessive or insufficient light intensity and saves the setting time.

- This product is only for the detection of target objects. Do not use this product for purposes such as protecting the human body or body parts.
- This product must not be used as an explosion-proof product. Do not use this product in a hazardous location or an environment with potentially explosive gases.
- This product is a DC power supply type sensor. Do not use an AC power supply. Otherwise, the product may explode or catch fire.
- Do not wire the amplifier along power lines or high-voltage lines. Otherwise, the sensor may malfunction or be damaged due to noise.
- Do not use outdoors or in a location where external light can directly enter the light receiving surface.

EC-76 Thin-film Solid-state Relay

- Compatible with the SE-OF series fiber amplifiers;
- Can connect multiple SE-OF fiber amplifiers in series to one PNP output.

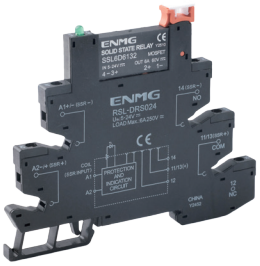

Model	EC-76
Input	5-24VDC
Output	DC low internal resistance type 5A 5~60V
A1,A2 wiring	NPN type: A1 is connected to the black output wire of amplifier, A2 is connected to 24V; The brown positive power cord of amplifier can be connected to A2, and the positive common power supply is realized through the busbar shorting piece. PNP type: A1 is connected to 0V, A2 is connected to the black output wire of amplifier; The blue negative power cord of amplifier can be connected to A1, and the negative common power supply is realized through the busbar shorting piece.
Series installation	Port 14 of the previous relay is connected to ports 11/13 of the next relay

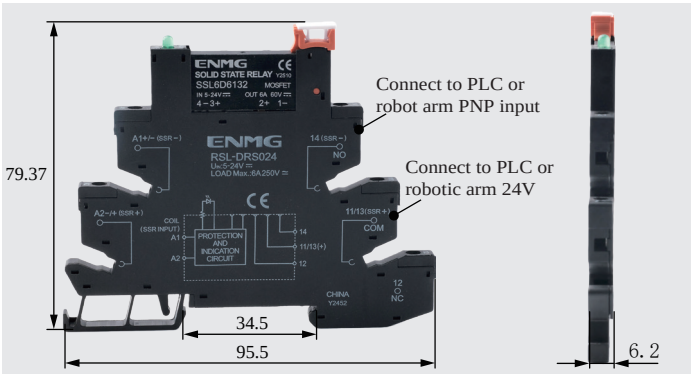

Wiring method for connecting **NPN** type

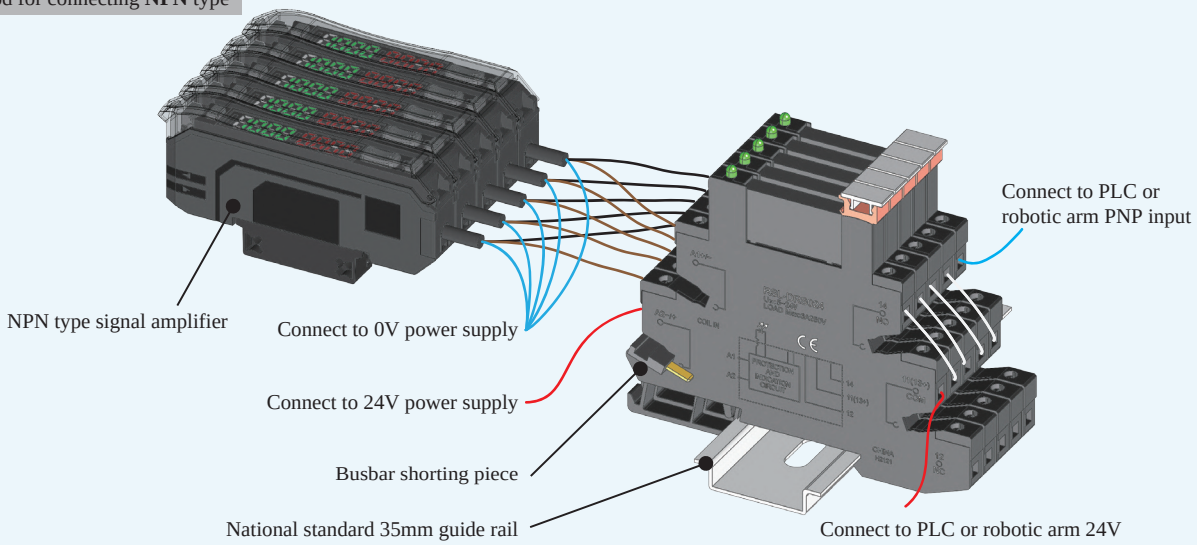

Wiring method for connecting **PNP** type

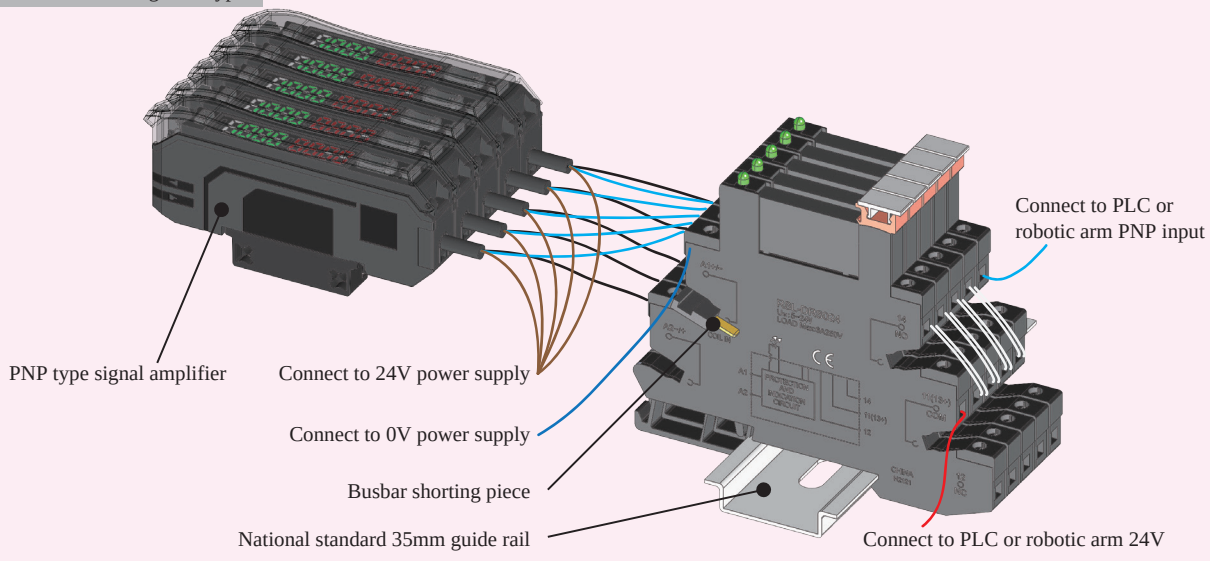

CU
控制单元



HCU-A35

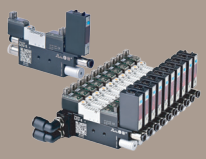

LCU-S
Light-duty Drive Module
(Standard Type)

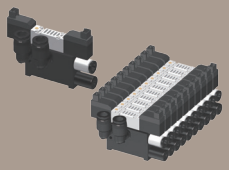

LCU-E
Light-duty Drive Module
(Cost-effectiveness)

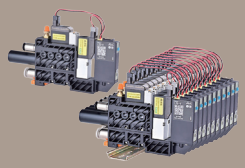

LCU-V
Light-duty Drive Module
(Vacuum Type)



LCU-H
Light-duty Drive Module
(High-speed Type)



iPCU2
Passive Actuator



iPCU2-E
Passive Actuator
Cost-effectiveness)



ACU2-B
Active Actuator



ACU2-H
Active Actuator



PCU2
Passive Actuator



EK-HCU
Drive Pen
Expansion Kit

Product Overview

HCU-A35

- The gripper angle can be adjusted by 30°
- The gripper end can be quickly replaced.

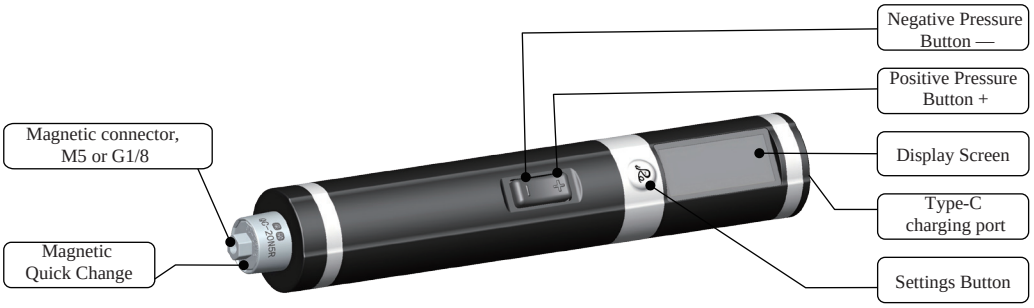



Working Parameters

Battery Life / Battery Capacity	300min / 3000mAh	Output Air Pressure	-65kPa~145kPa	Operating Noise	60dB	Net Weight	180g
Charging Voltage / Rated Voltage	Type-C 5V/1A 3.7V	Positive Pressure Flow Rate	300mL/min	Vacuum Flow Rate	300mL/min	Dimensions	φ35 x 205mm

Magnetic Quick Change Head	Rotatable Angle	Instructions for Use









Vacuum | Normal Pressure | Positive Pressure

Nozzle

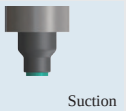



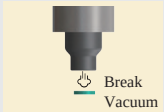

Soft Gripper







LCU-S Light Duty Drive Module (Standard Type)

- Compatible with the full range of soft grippers and soft fingers, and can precisely adjust the clamping force with precision pressure regulators.
- Multi-channel asynchronous drive, response speed 5ms.
- Equipped with a filter.

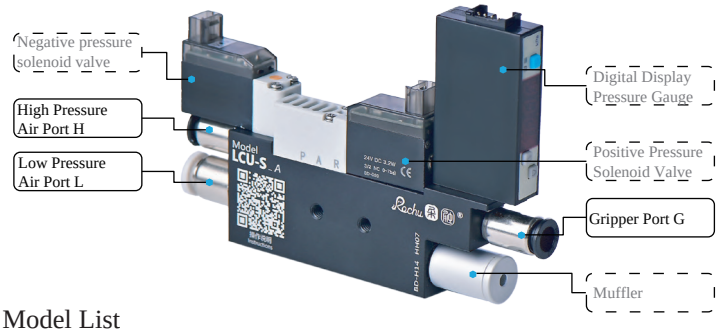

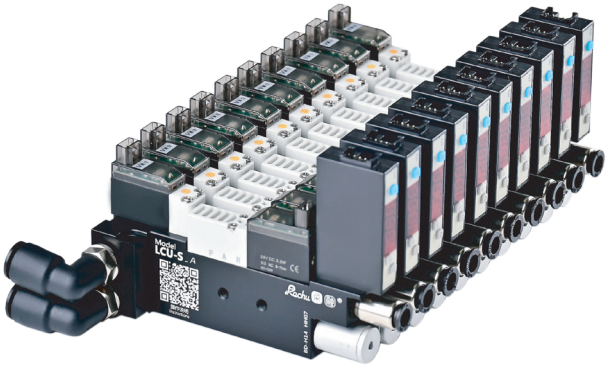

Model List

Model	Model Output Type	Model	Model Output Type	Module Quantity	D[mm]	L[mm]	Noise [dB]	Net Weight [g]	Positive * PressureFlow [L/min]	Negative * Pressure Flow [L/min]	High Pressure Air SourceH Input Flow [L/min]
LCU-S_A	2-channel NPN	LCU-S_P	2-channel PNP	1	—	—	80	127	35	30	＞40
LCU-S2_A	2-channel NPN	LCU-S2_P	2-channel PNP	2	39	74	82.5	254	70	57	＞60
LCU-S3_A	2-channel NPN	LCU-S3_P	2-channel PNP	3	54	89	83	381	97	83	＞85
LCU-S4_A	2-channel NPN	LCU-S4_P	2-channel PNP	4	69	104	84	508	127	105	＞105
LCU-S5_A	2-channel NPN	LCU-S5_P	2-channel PNP	5	84	119	85	635	154	135	＞140
LCU-S6_A	2-channel NPN	LCU-S6_P	2-channel PNP	6	99	134	86.2	762	175	162	＞165
LCU-S7_A	2-channel NPN	LCU-S7_P	2-channel PNP	7	114	149	86.5	889	192	186	＞190
LCU-S8_A	2-channel NPN	LCU-S8_P	2-channel PNP	8	129	164	86.5	1016	205	208	＞210
LCU-S9_A	2-channel NPN	LCU-S9_P	2-channel PNP	9	144	179	87	1143	220	233	＞235
LCU-S10_A	2-channel NPN	LCU-S10_P	2-channel PNP	10	159	194	89	1270	230	252	＞255

*：The flow parameters are tested under the following conditions: High Pressure Air Port H pressure = 0.54 MPa, Low Pressure Air Port L pressure = 100 kPa.

Operating Parameters

Output Air Pressure	-90~300kPa	Drive Mode	24V I/O Signal Drive
Solenoid Valve Response Speed	5ms	Service Life	20 million cycles
High Pressure Air Source H Input	0.45~0.55MPa ,dry, clean, and stable	Low Pressure Air Source L Input	0~300kPa , dry, clean, and stable

External Dimensions

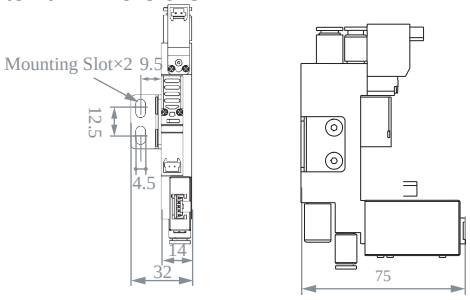

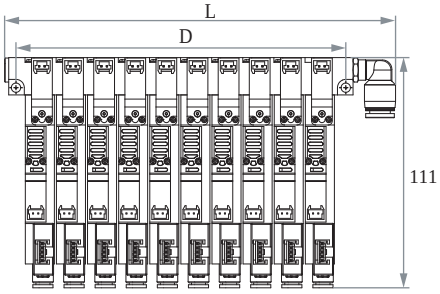

Installation Method

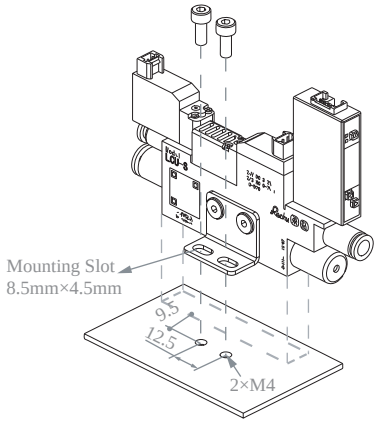

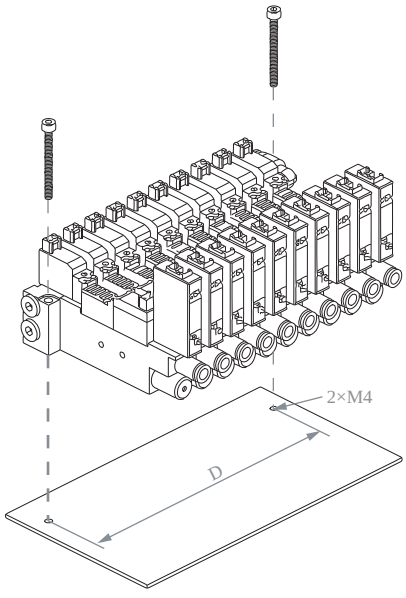

Usage

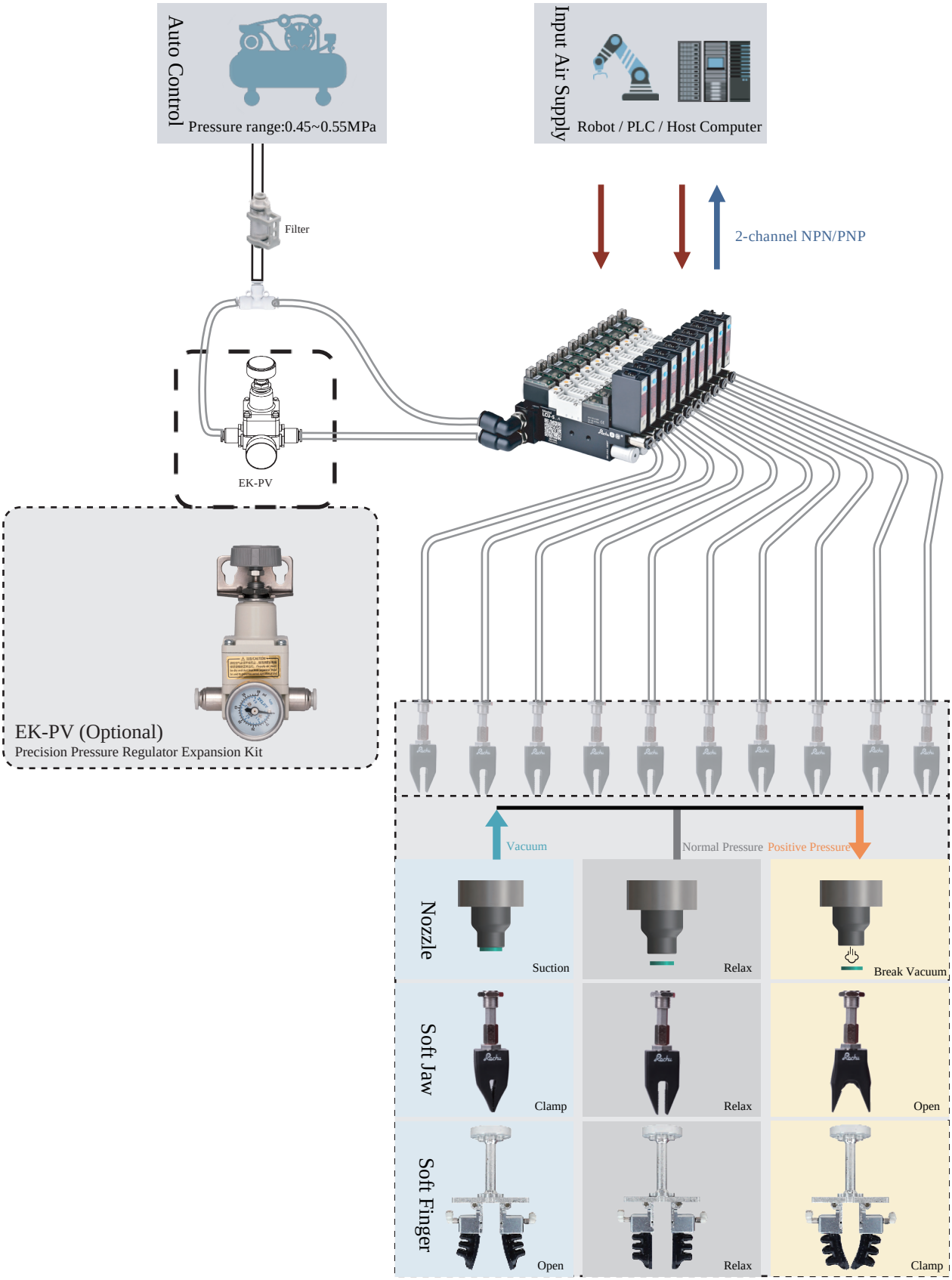

Pneumatic Circuit Characteristics	Vacuum	Atmospheric Pressure	Positive Pressure
Positive Pressure Solenoid Valve	De-energized	De-energized	Energized
Vacuum Solenoid Valve	Energized	De-energized	De-energized

LCU-E Light Duty Drive Module (Economical Type)

- Compatible with the full range of soft grippers, suction nozzles and soft fingers. The clamping force can be precisely adjusted with a precision pressure regulating valve.
- Multi-channel asynchronous drive.
- Equipped with a filter and fixed via mounting oblong holes.

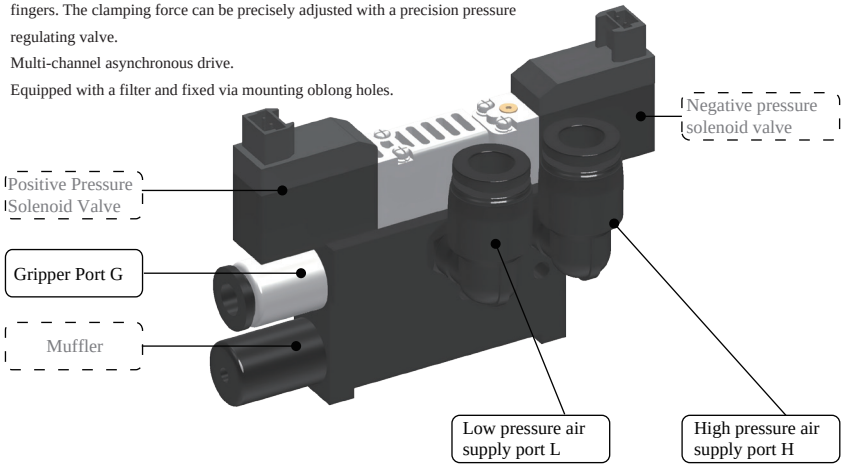

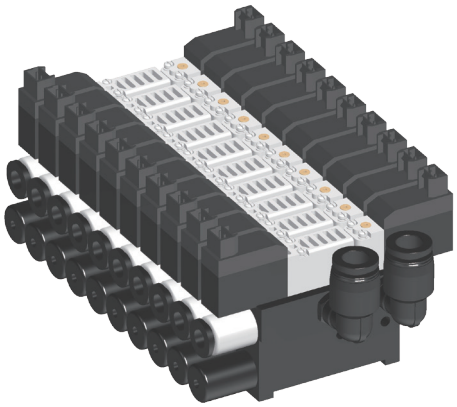

Model List

Model	Number of Modules	L[mm]	Signal Output
LCU-E	1	—	I/O Signal
LCU-E2	2	52.5	I/O Signal
LCU-E3	3	64.5	I/O Signal
LCU-E4	4	76.5	I/O Signal
LCU-E5	5	88.5	I/O Signal
LCU-E6	6	100.5	I/O Signal
LCU-E7	7	112.5	I/O Signal
LCU-E8	8	124.5	I/O Signal
LCU-E9	9	136.5	I/O Signal
LCU-E10	10	148.5	I/O Signal

Operating Parameters

Output Air Pressure	-85~300kPa
High Pressure Air Supply H Input	0.4~0.5 MPa
Solenoid Valve Response Speed	35ms , dry, clean and stable 24V I/
Drive Mode	O signal drive
Service Life	20 million cycles
Low Pressure Air Supply L Input	0~300 kPa, dry, clean and stable

Appearance Dimensions

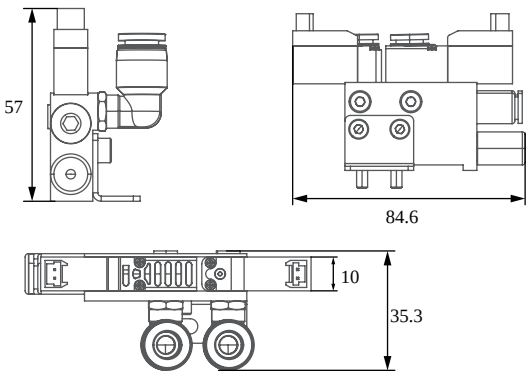

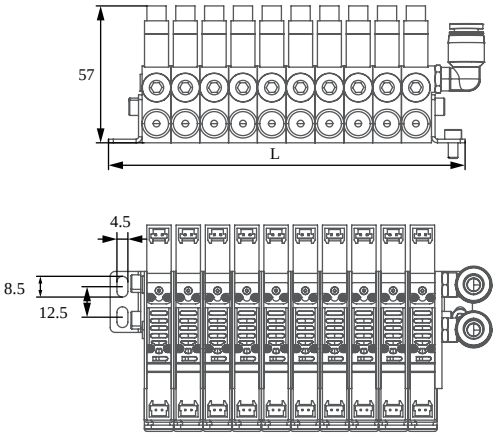

Installation Method

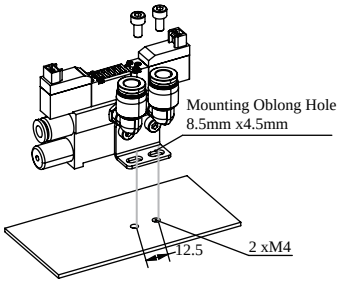

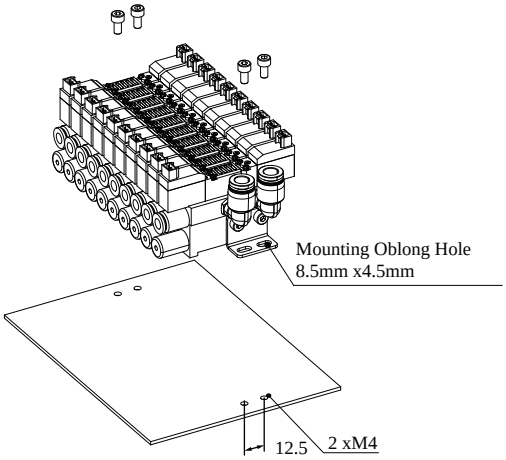

Usage

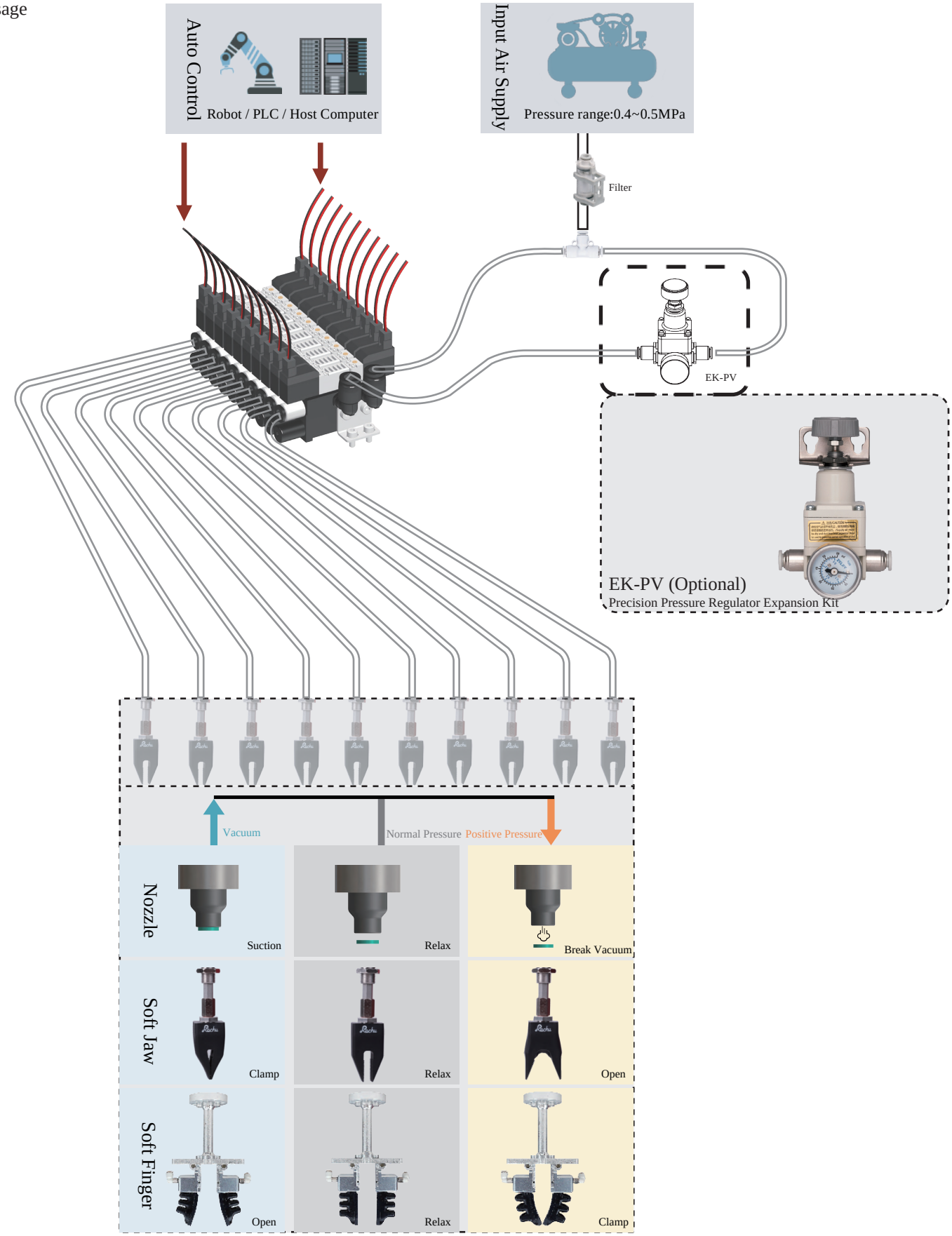

Pneumatic Circuit Characteristics	Vacuum	Atmospheric Pressure	Positive Pressure
Positive Pressure Solenoid Valve	De-energized	De-energized	Energized
Vacuum Solenoid Valve	Energized	De-energized	De-energized

Product Overview

LCU-V Light Duty Drive Module (Vacuum Type)

- Suitable for vacuum nozzles or some vacuum soft grippers.
- Fast response speed, low air consumption, low noise, and high cost performance.

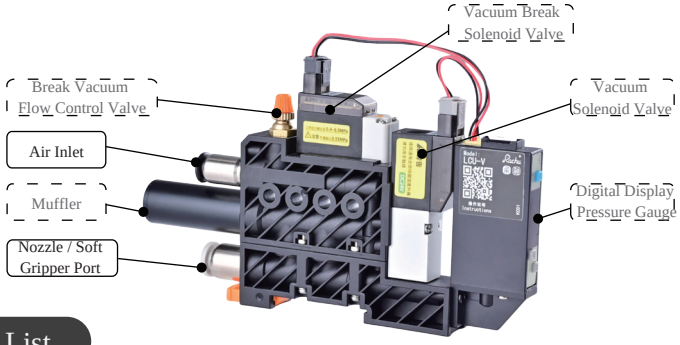

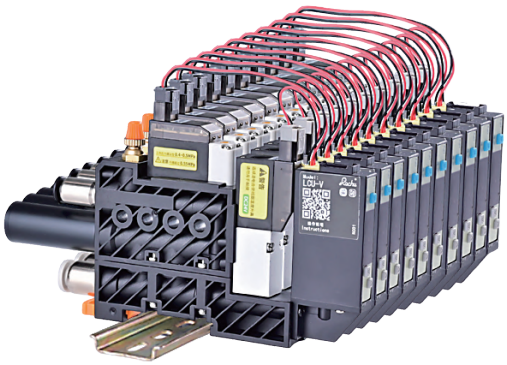

Model List

Model	Air Pressure Output Signal	Noise [dB]	Net Weight [g]	Dimensions [mm]
LCU-V	I/O signals	80	109	138.5×15

Operating Parameters

Name	Range	Name	Range
Output Vacuum	-91kPa	Air Inlet Input	0.4 ~ 0.5 MPa, dry, clean, and stable
Solenoid Valve Response Speed	30ms	Drive Mode	24V I/O Drive
Max Vacuum Flow*	32L/min	Signal Output Type	NPN
Air Consumption	51L/min	Service Life	50 million cycles

*: The flow rate is tested under the condition that the pressure at the high-pressure air supply port is 0.4~0.5 MPa.

Usage Instructions

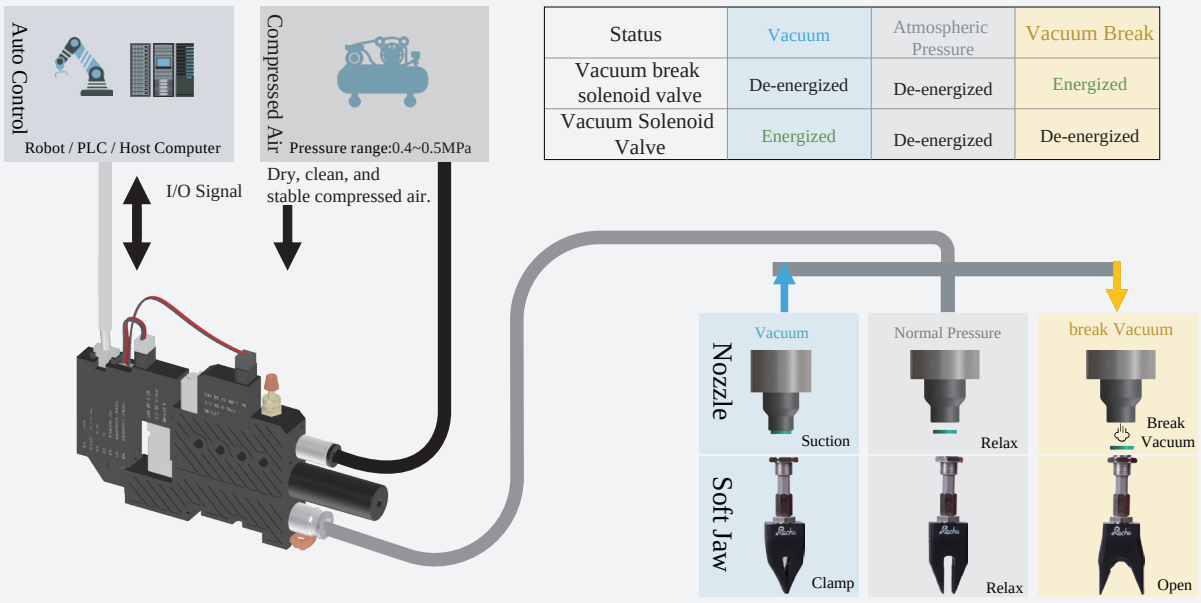

Status	Vacuum	Atmospheric Pressure	Vacuum Break
Vacuum break solenoid valve	De-energized	De-energized	Energized
Vacuum Solenoid Valve	Energized	De-energized	De-energized

Outline Dimensions

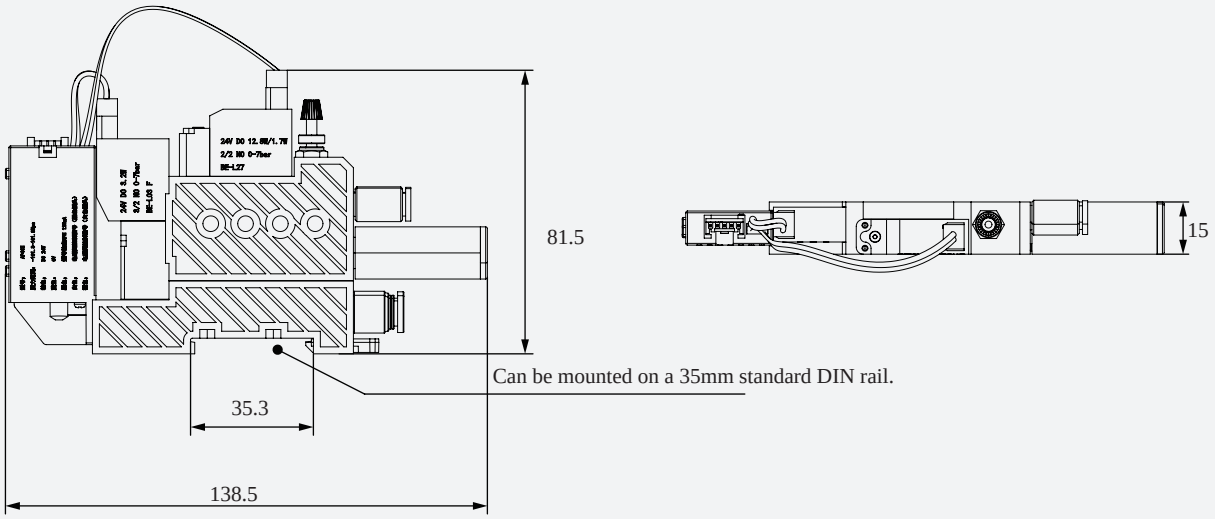

Installation Method

Multi-unit combined installation with independent air inlets

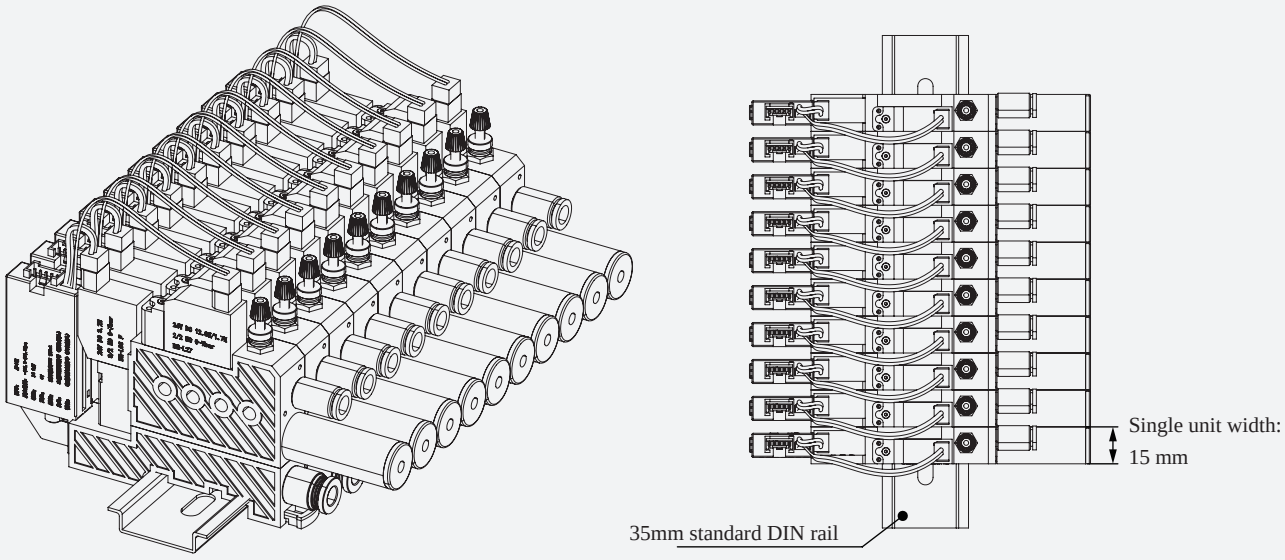

LCU-H Lightweight Drive Module (High-Speed Type)

·Output air pressure range of -85~300kPa, suitable for driving the full series of soft claws and soft fingers.
·Cylinder-type pneumatic control method, simple operation and convenient replacement.
·Small in size and light in weight, it can be flexibly combined in multiple channels to form an asynchronous driving mode.
·Equipped with flat and flange mounting holes and industrial rail buckles, with multiple installation methods.

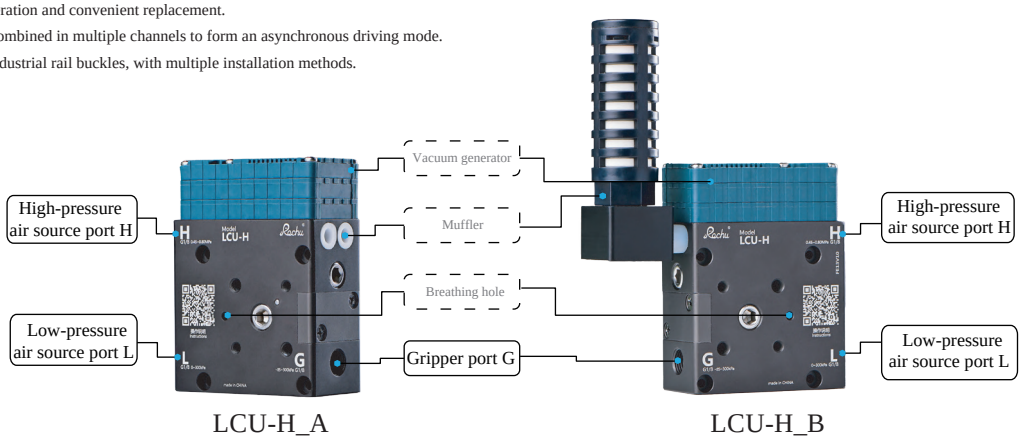

Model table

Model	Noise [dB]	Net weight[g]	Size[mm]
LCU-H_A High Speed Standard Ty	92	350	85× 63.6× 31
LCU-H_B High Speed Silent Type	72	380	137.3× 97.9× 31

Working parameters

Item	Range	Item	Range
Output pressure	-85~300kPa	Drive mode	Pneumatic drive
Valve body material	Aluminum alloy anodic oxidation	Lifetime	5000 million times
Pressure flow rate*	165L/min	Vacuum flow rate*	55L/min
High-pressure air source H input	0.45 - 0.8 MPa, dry, clean and stable, flow rate > 200 L/min	Low-pressure air source L input	0~300kPa,dry,clean and stable

：The test conditions for this flow parameter are: the pressure at the high-pressure gas source port H = 0.6 MPa, and the pressure at the low-pressure gas source port L = 100 kPa.

Appearance Dimensions

Main Body

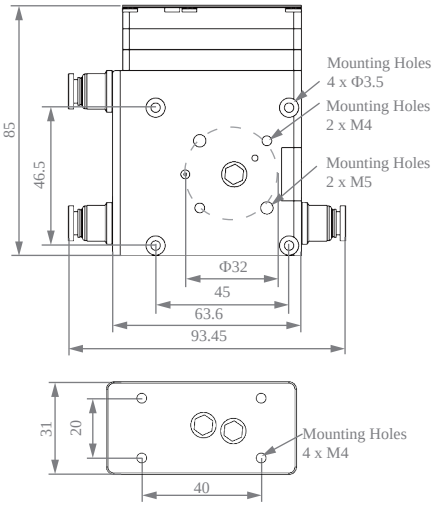

Rail Buckle Adapter Plate

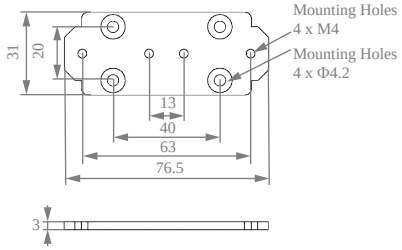

Mounting Method

①Rail Mounting

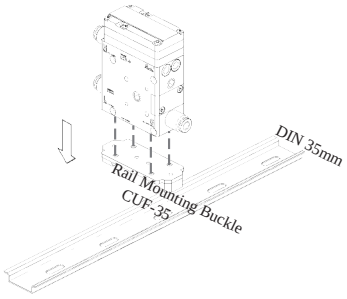

②Bottom Mounting

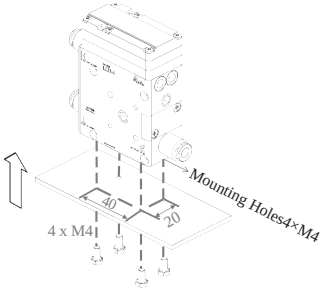

③Side Mounting

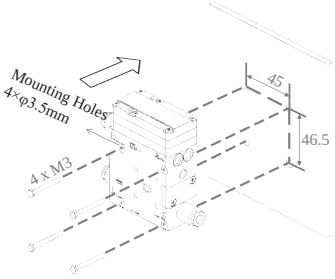

④Side Mounting

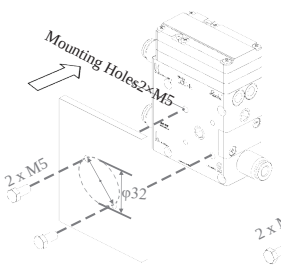

⑤Side Mounting

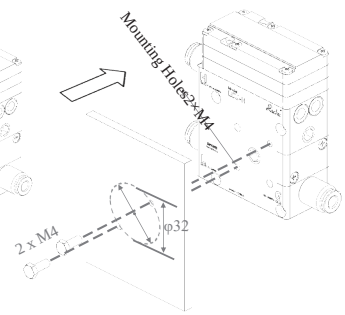

Single Channel Drive - Usage Method

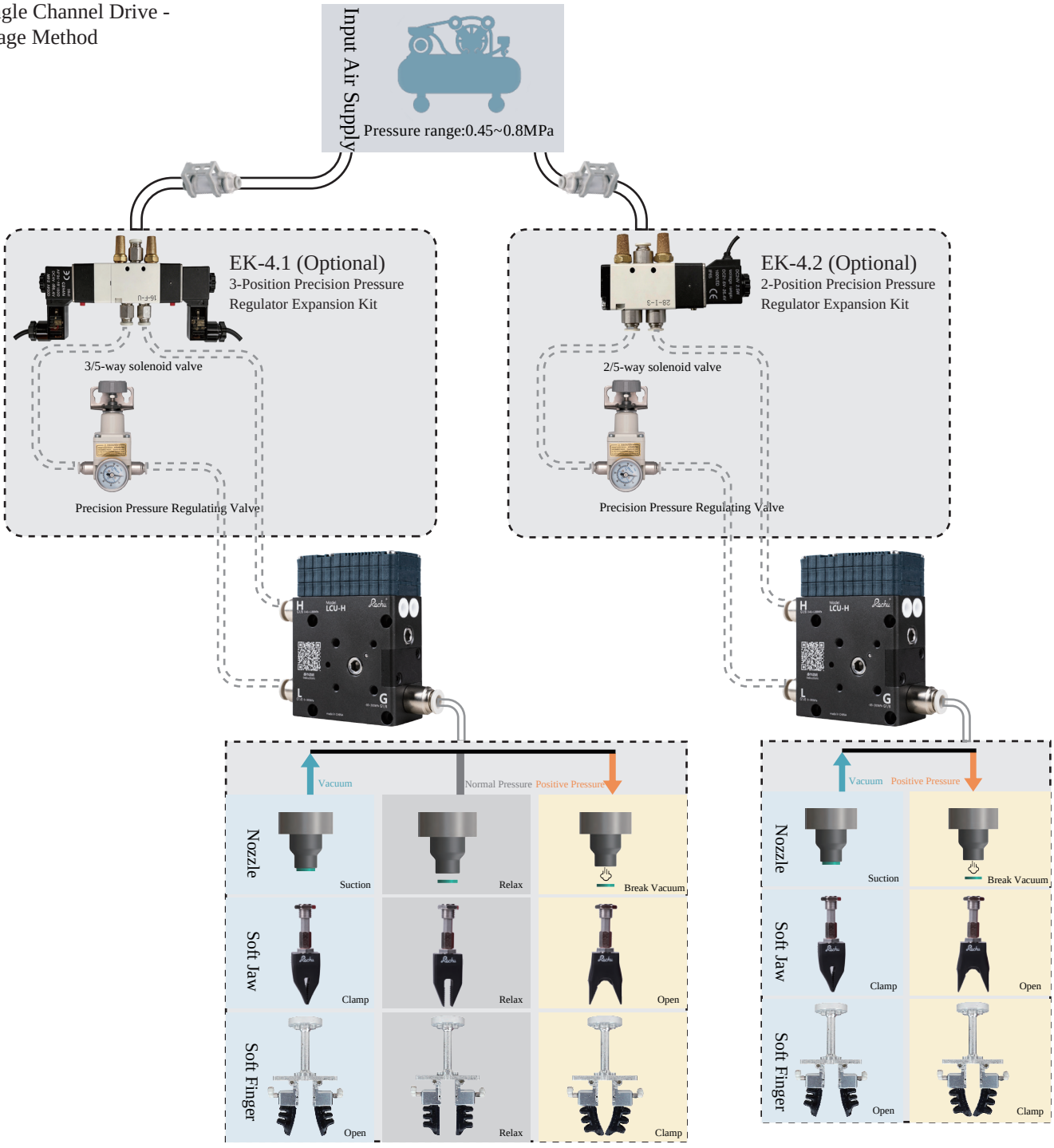

Multi-channel Drive - Usage Method

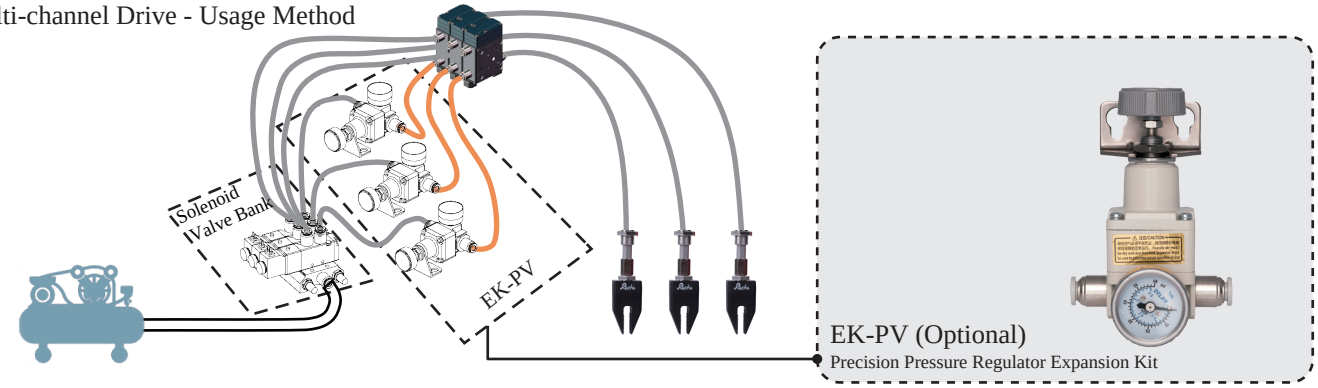

iPCU2 Integrated Passive Control Unit

·-90~300kPa three levels can adjust the output pressure range, fully support from soft Beak to soft finger drive.
·Manual knob type pressure regulating.
·Integrated panel with digital display and operation buttons.
·With manual (button) and automatic (I/O level signal) two control modes, with all kinds of mechanical arm, PLC and others.
·Equipped with Installation bracket and industrial rail buckle, a variety of Installation.
·Intelligent alarm function, safe and stable, no need to worry about misoperation.
·with European CE safety certification.



Model

Model		Adjust Vacuum	Output pressure	Max pressure	Vacuum flow*	Working noise	N.W.
iPCU2-SMV	Standard vacuum pressure regulating type	Manual	-85 ~ 300[kPa]	-85kPa	40L/min	76dB	2.1kg
iPCU2-SMN	Passive driver standard type	Not supported	-90 ~ 300[kPa]	-90kPa	40L/min]	75dB	2.0kg
iPCU2-HMV	High-speed vacuum pressure regulating type	Manual	-85 ~ 300[kPa]	-85kPa	80L/min	73dB	2.1kg
iPCU2-HMN	Passive driver high-speed type	Not supported	-80 ~ 300[kPa]	-80kPa	80L/min	72dB	2.0kg

iPCU2 has two options: standard type and high-speed type. The high-speed type has a larger vacuum flow and is suitable for high-speed handling.
*Test conditions for negative pressure flow parameter: pressure at the air source end = 0.6 MPa.

Parameter

Item	Range	Item	Range
Nominal Voltage	24V± 10%	Frame Material	engineering plastics
Rated Power	12W	Size	208× 134× 141mm
Life time	50 million times	Protection grade	IP54
Positive pressure regulation	Manual	Control mode	1. Manual button
Safe pressure	Adjustable		2. I/O, level signal
Input air	0.45~1.00MPa Dry, Clear, Stable flow＞200L/min	Working mode	Continuous drive mode
		Vacuum flow*	260L/min

*The flow parameters test conditions: air source port Pressure= 0.6mpa, gripper set Pressure=100kPa

External Dimensions

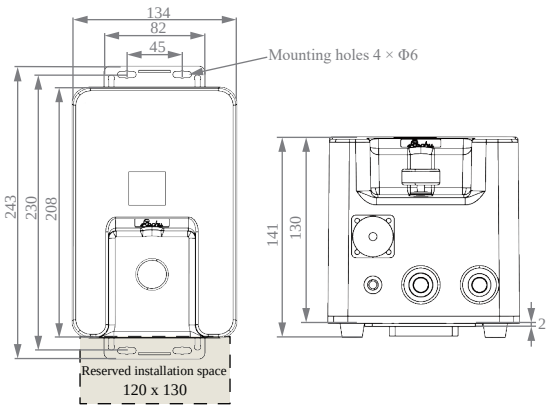

Mounting Method

①Rail Mounting

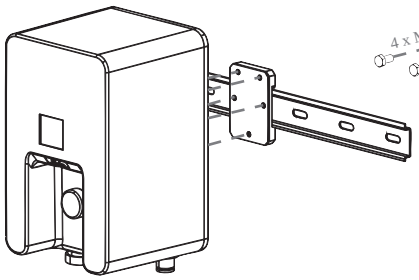

②Bottom Mounting

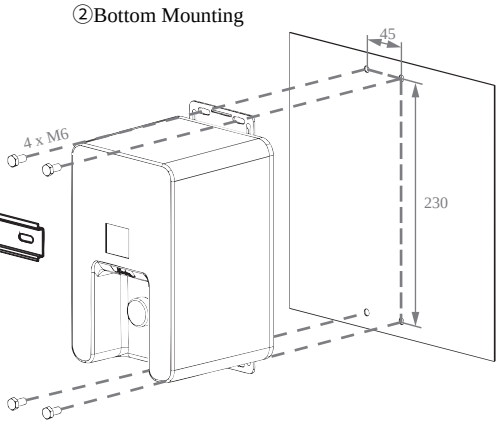

Usage

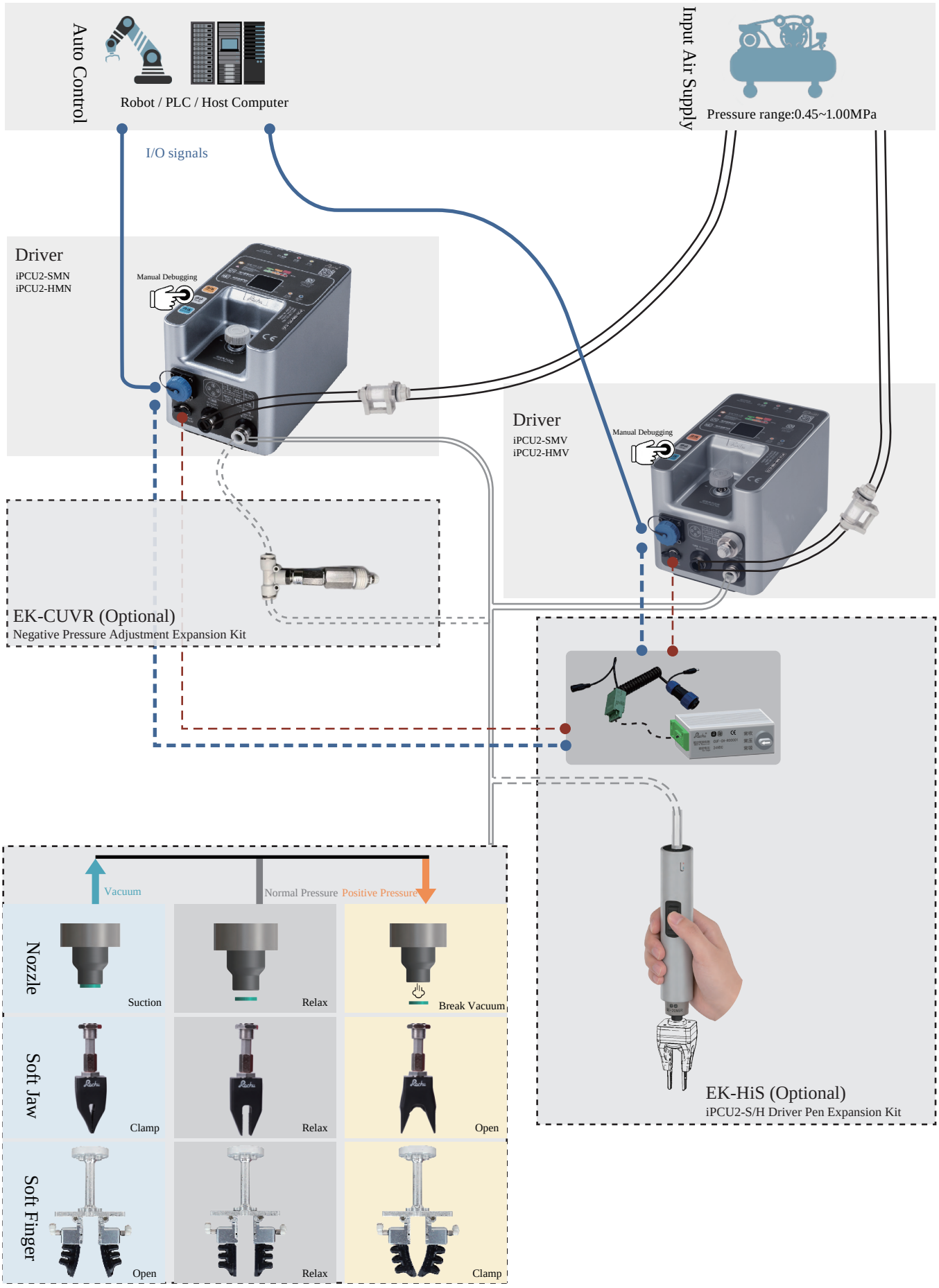
Auto Control
Robot / PLC / Host Computer
Input Air Supply
Pressure range:0.45~1.00MPa
I/O signals
Driver
iPCU2-SMN
iPCU2-HMN
Manual Debugging
Driver
iPCU2-SMV
iPCU2-HMV
Manual Debugging
EK-CUVR (Optional)
Negative Pressure Adjustment Expansion Kit
Vacuum
Normal Pressure
Positive Pressure
Nozzle
Suction
Relax
Break Vacuum
Soft Jaw
Clamp
Relax
Open
Soft Finger
Open
Relax
Clamp
EK-HiS (Optional)
iPCU2-S/H Driver Pen Expansion Kit

iPCU2-E Passive Driver (Economy Type)

- Compatible with the full range of soft grippers, suction nozzles and soft fingers, with a response speed of 5 ms. Equipped with a flat mounting bracket and filter.



Operating Parameters

Name	Range	Name	Range
Output Air Pressure	-90~300kPa	Drive Mode	24V I/O Signal Drive
Solenoid Valve Response Speed	5ms	Service Life	2000 cycles
Positive Pressure Flow*	35L/min	Negative Pressure Flow*	30L/min
Input Air Pressure	0.45~0.55MPa,dry, clean, stable, flow rate > 40 L/min	Noise	80dB
Net Weight	1.26kg	Dimensions	156×167×80mm

*：The flow parameters are tested under the following condition: Air supply port H pressure = 0.5 MPa.

External Dimensions

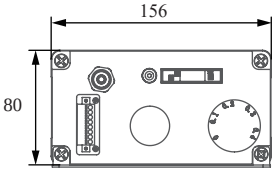

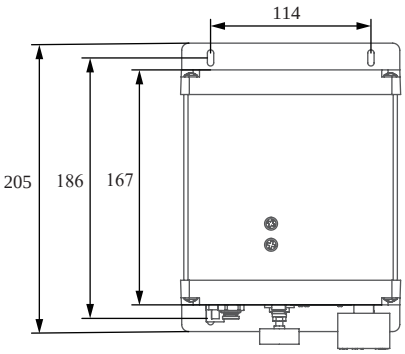

Installation Method

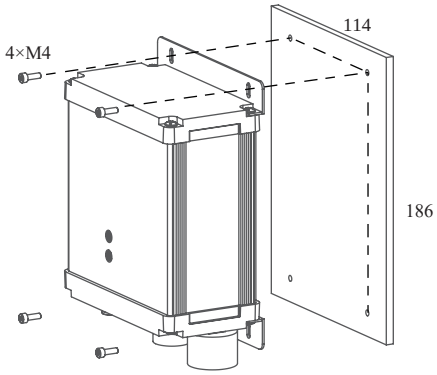

Usage

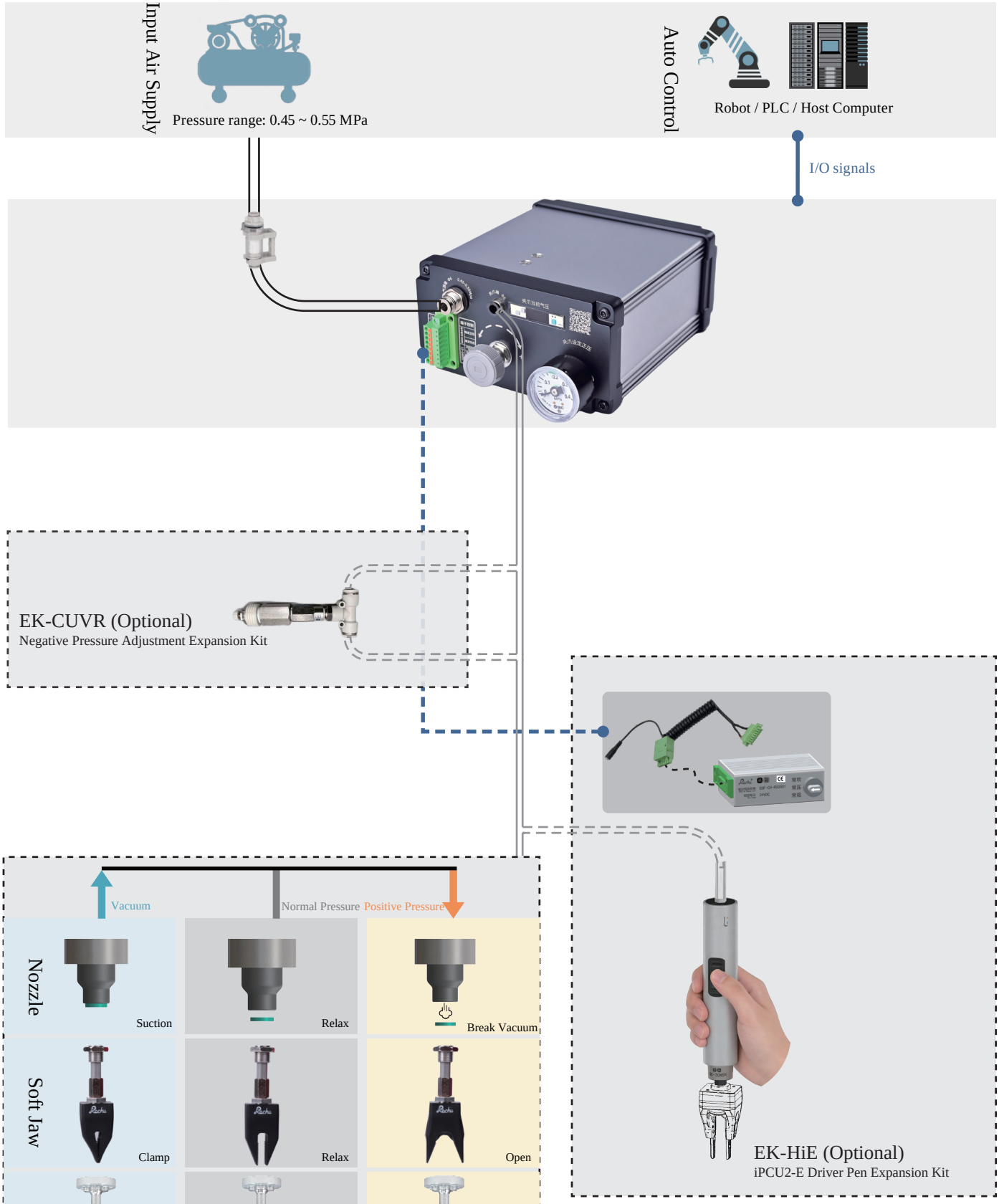
Input Air Supply
Pressure range: 0.45 ~ 0.55 MPa
Auto Control
Robot / PLC / Host Computer
I/O signals
EK-CUVR (Optional)
Negative Pressure Adjustment Expansion Kit
Vacuum
Normal Pressure
Positive Pressure
Nozzle
Suction
Relax
Break Vacuum
Soft Jaw
Clamp
Relax
Open
Soft Finger
Open
Relax
Clamp
EK-HiE (Optional)
iPCU2-E Driver Pen Expansion Kit

ACU2-B Active Driver

Compact Soft-Touch Active Driver

·Built-in air source, compact and lightweight.
·Compatible with the actuation of some soft grippers and soft fingers made of conventional materials.
·Six levels of positive pressure and four levels of vacuum pressure output, adjustable in real time via panel buttons, with an output accuracy of ±10 kPa.conventional materials.
·Integrated panel with built-in digital display and control buttons.
·Features two control modes: manual (push-button) and automatic (I/O level signal), compatible with various robotic arms and PLC terminals.
·Product complies with EU CE safety certification.



Working Parameters

Name	Range	Name	Range
Rated Voltage	24VDC±10%	Housing Material	Engineering Plastics
Rated Power	18W	Dimensions	158× 120× 74mm
Lifespan	5000 hours	Protection class	IP54
Output Air Pressure	Ten-speed setting -80/-60/-40/-20/0/20/40/60/80/100/120[kPa]	Control Mode	1.Manual Button 2.I/O， Level Signal
Output Accuracy	± 10kPa	Net Weight	870g
Positive Pressure Flow Rate	4L/min	Working Mode	Driven by continuous signal
Vacuum Flow Rate	4L/min	Working Noise	60dB

External Dimensions

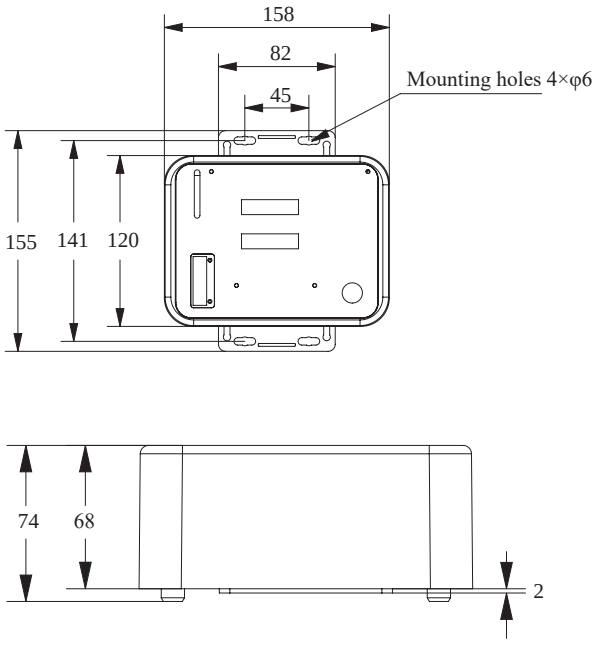

Installation Method

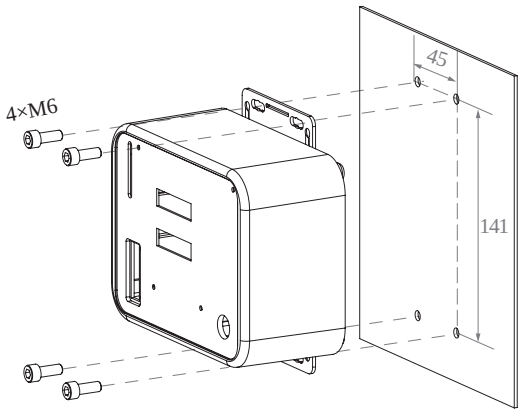

Usage

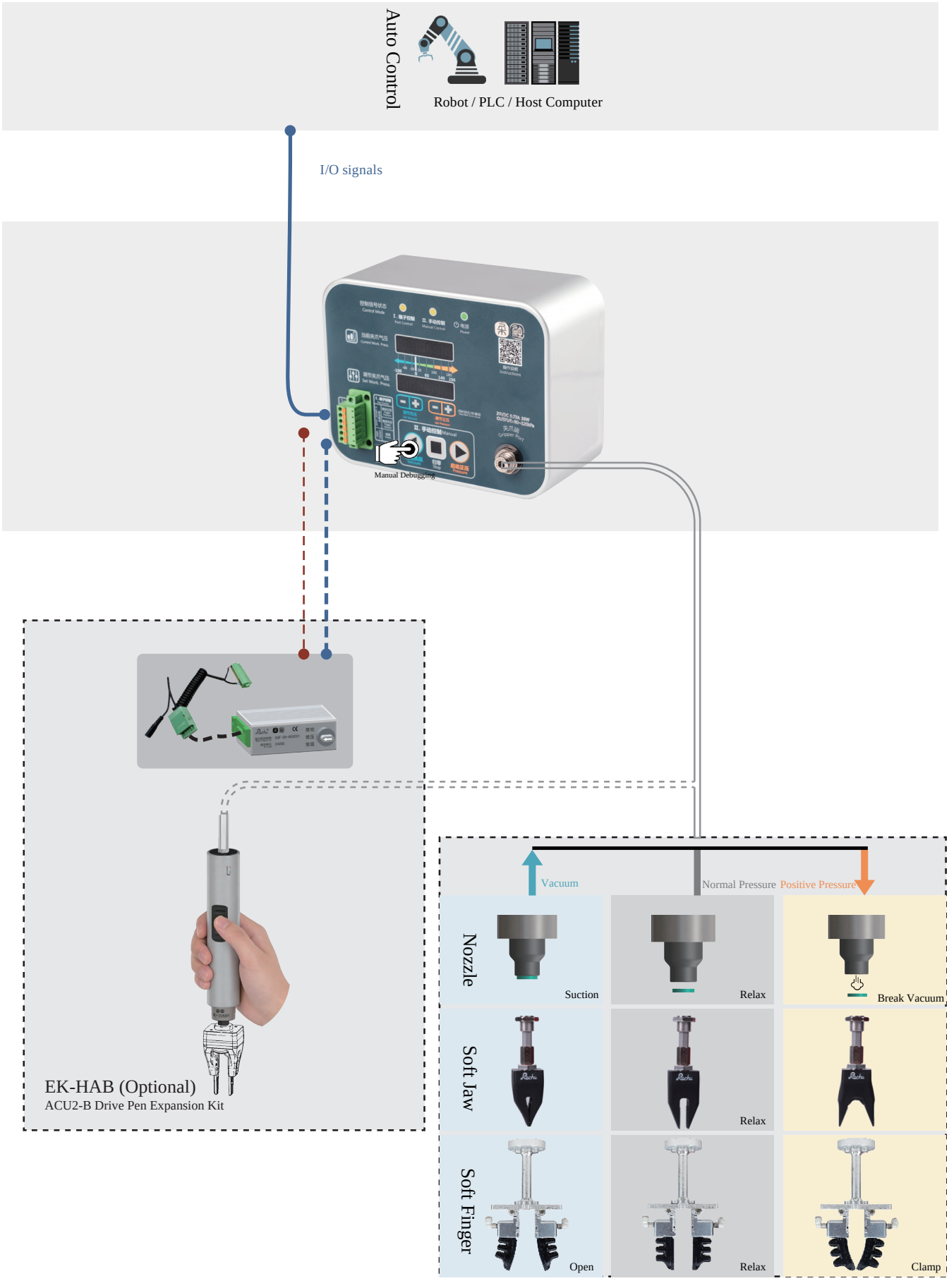
Auto Control
Robot / PLC / Host Computer
I/O signals
Manual Debugging
EK-HAB (Optional)
ACU2-B Drive Pen Expansion Kit
Vacuum
Normal Pressure
Positive Pressure
Nozzle
Suction
Relax
Break Vacuum
Soft Jaw
Relax
Soft Finger
Open
Relax
Clamp

ACU2-H Active Driver

All-Round Soft-Touch Active Driver

·Built-in air supply, rich interfaces.
·Output air pressure range: -80~280 kPa, suitable for driving the full range of soft jaws and soft fingers.
·Working positive pressure and working vacuum can be digitally adjusted in real time via panel buttons, with an output accuracy of ±3 kPa.
·Integrated panel with built-in digital display and operation buttons.
·It features multiple control modes: manual (button), I/O, analog, and MODBUS, and is compatible with various robotic arms and PLC terminals.
·This product has obtained EU CE safety certification.



Operating Parameters

Name	Range	Name	Range
Rated Voltage	24VDC± 10%	Housing Material	Aluminum Alloy (Anodized)
Rated Power	48W	Dimensions	120x223x75mm
Service Life	5000 hours	Net Weight	1.8kg
Output Pressure	-80~280kPa	Protection Grade	IP54
Output Accuracy	± 3kPa	Control Method	1. Manual Button
Positive Pressure Flow	8L/min		2. I/O , Level Signal
Vacuum Flow	8L/min		3. Voltage Analog Pressure Regulation
Operating Noise	63dB		4. MODBUS TCP/RTU
Operating Mode	Continuous Signal Drive		

External Dimensions

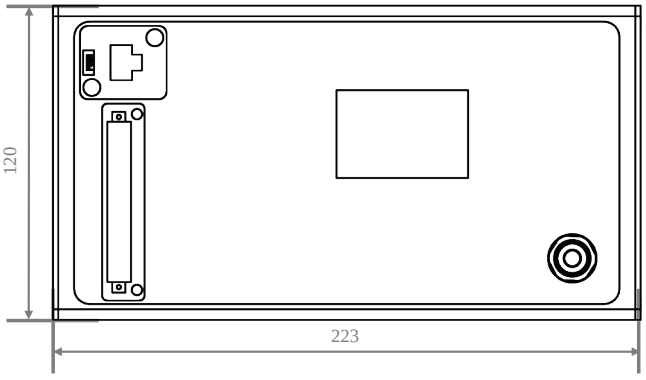

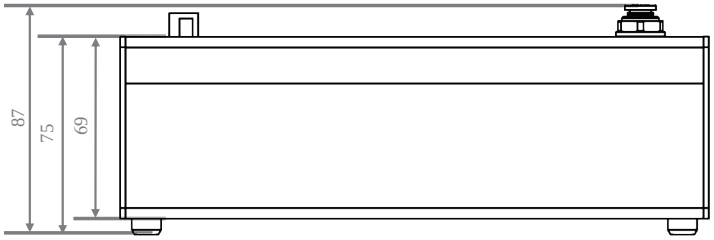

Usage

Auto Control

Robot / PLC / Host Computer

I/O signals



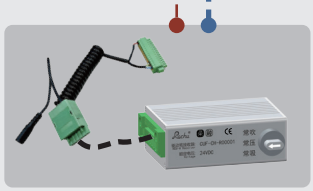



EK-HAB (Optional)
ACU2-H Drive Pen Expansion Kit

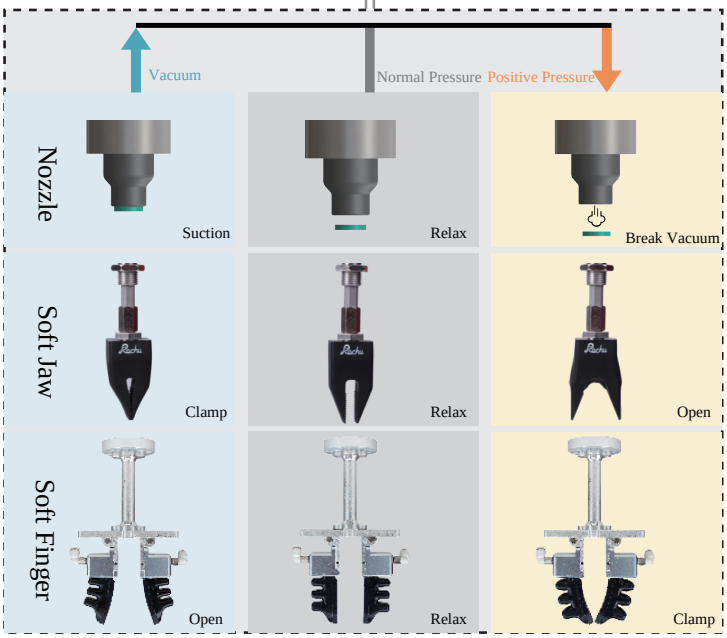

PCU2-M Passtive Control Unit

All-round Manual passive control unit

·-80~300kPa digital Adjust Output pressure Range，suit for all kinds of Beak & Finger.

·It can precisely adjust the working Pressure or Vacuum, and can choose the manual knob pressure regulating type PCU2-M or the electronic analog pressure regulating type PCU2-V.

·It has various control modes of manual (button), I/O and MODBUS, and is compatible with various mechanical arms and PLC terminals.

·With an intelligent output alarm signal, it is safe, and there is no need to worry about misoperation.



Parameter

Item	Range	Item	Range
Nominal Voltage	24VDC ±10%	Frame Material	Anodic oxidation of aluminum alloy
Rated Power	24W	Net Weight	3.85kg
Life time	50 million times	Protect grade	IP54
input air	0.45~1.00MPa dry、clean、stable Flow＞200L/min	Mode	1. Manual button 2. I/O，level signal 3. remote（PCU2-M） 4. Modbus TCP/RTU
Output pressure	-80~300kPa		
Pressure Flow	260L/min	working mode	Continuous signal drive
Vacuum Flow	80L/min	working noise	70dB
Positive pressure regulation	Manual	Size	280x165(+35)x125mm
Negative pressure regulation	Manual	Wireless remote control	Support
Safe pressure	Adjustable	Attitude feedback	Support

Outline Dimensions

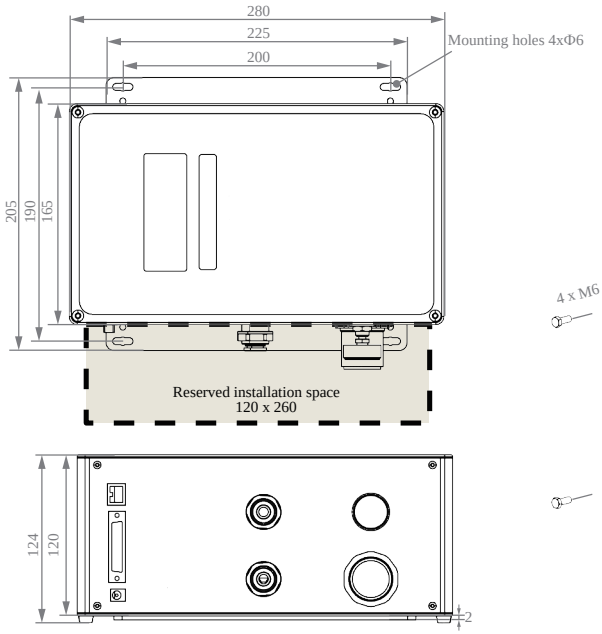

Installation Method (Bottom Mounting)

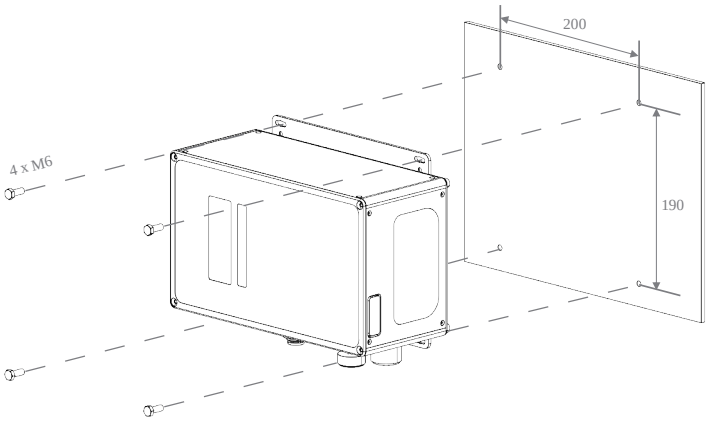

Usage

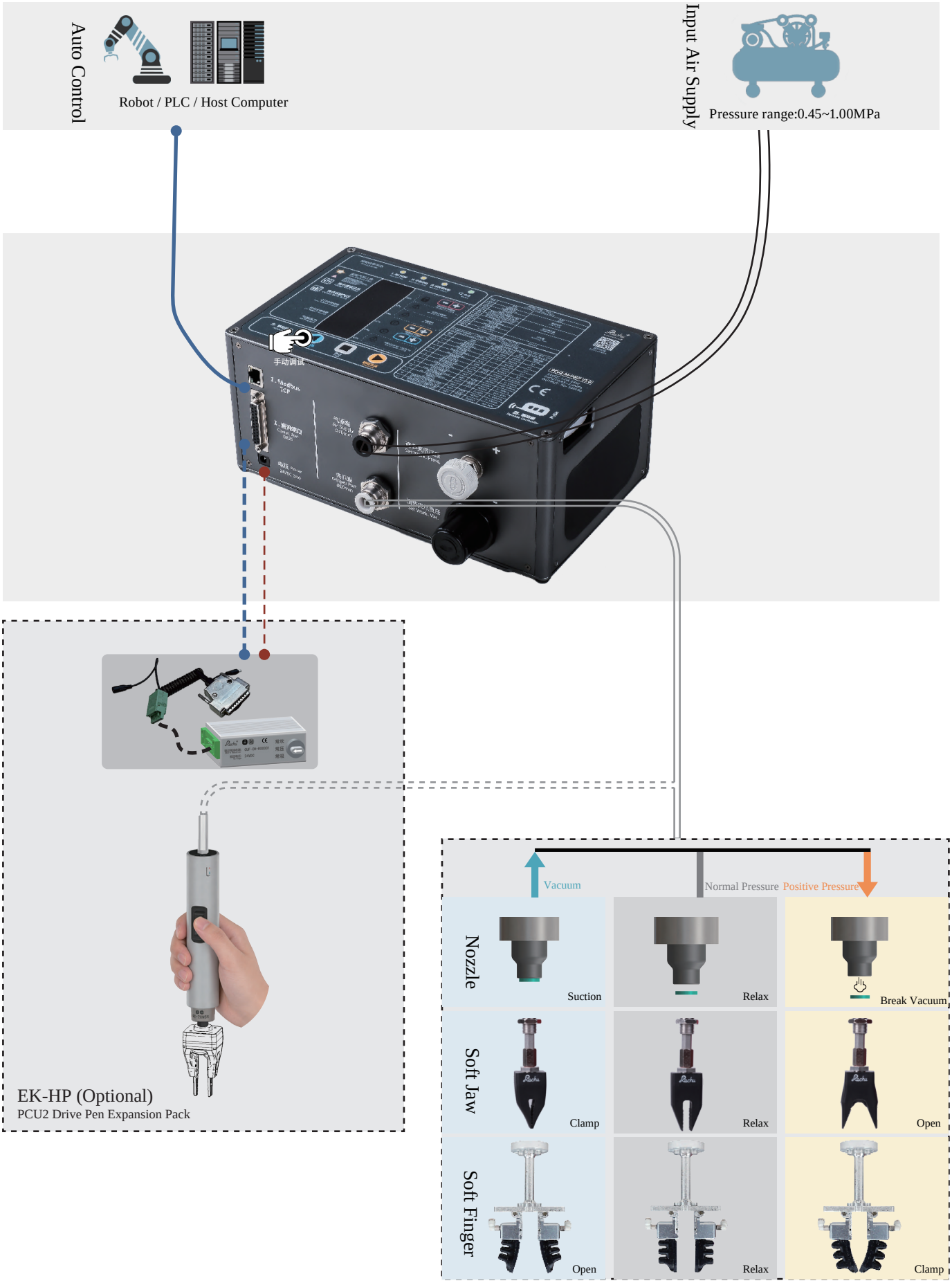
Auto Control
Robot / PLC / Host Computer
Input Air Supply
Pressure range:0.45~1.00MPa
手动调试
EK-HP (Optional)
PCU2 Drive Pen Expansion Pack
Vacuum
Normal Pressure
Positive Pressure
Nozzle
Suction
Relax
Break Vacuum
Soft Jaw
Clamp
Relax
Open
Soft Finger
Open
Relax
Clamp

PCU2-V Passtive Control Unit

All-round Electronic passive control unit

·-80~300kPa digital Adjust Output pressure Range，suit for all kinds of Beak & Finger.

·It can precisely adjust the working Pressure or Vacuum, and can choose the manual knob pressure regulating type PCU2-M or the electronic analog pressure regulating type PCU2-V.

·It has various control modes of manual (button), I/O and MODBUS, and is compatible with various mechanical arms and PLC terminals.

·With an intelligent output alarm signal, it is safe, and there is no need to worry about misoperation.



Parameter

Item	Range	Item	Range
Nominal Voltage	24VDC ±10%	Frame Material	Anodic oxidation of aluminum alloy
Rated Power	24W	Net Weight	4.4kg
Life time	50 million times	Protect grade	IP54
input air	0.45~1.00MPa dry,clean,stable Flow＞200L/min	Mode	1. Manual button 2. I/O，level signal 3. Modbus TCP/RTU
Output pressure	-80~300kPa		
Pressure Flow	260L/min	working mode	Continuous signal drive
Vacuum Flow	80L/min	working noise	50dB
Positive pressure regulation	Electronic	Size	280x165x154mm
Negative pressure regulation	Electronic	Wireless remote control	Not supported
Safe pressure	Adjustable	Attitude feedback	Support

Overall Dimensions

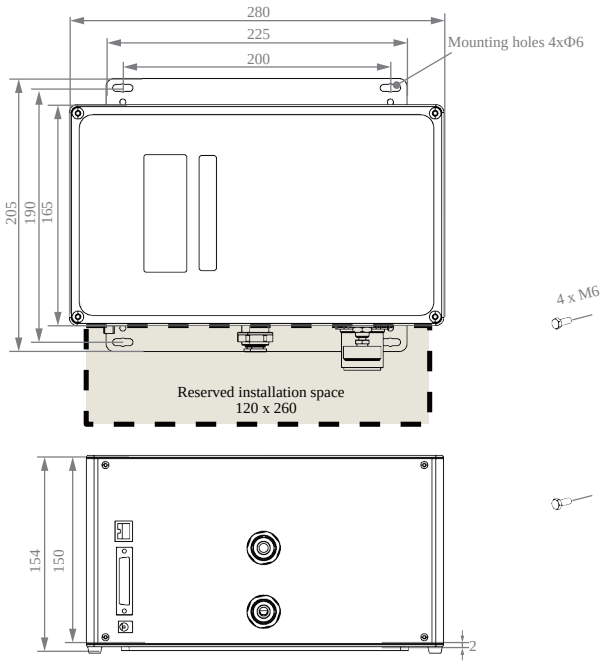

Installation Method (Bottom Mounting)

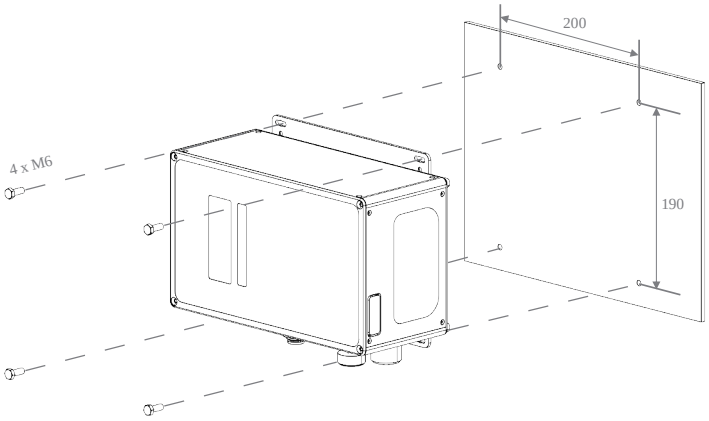

Usage

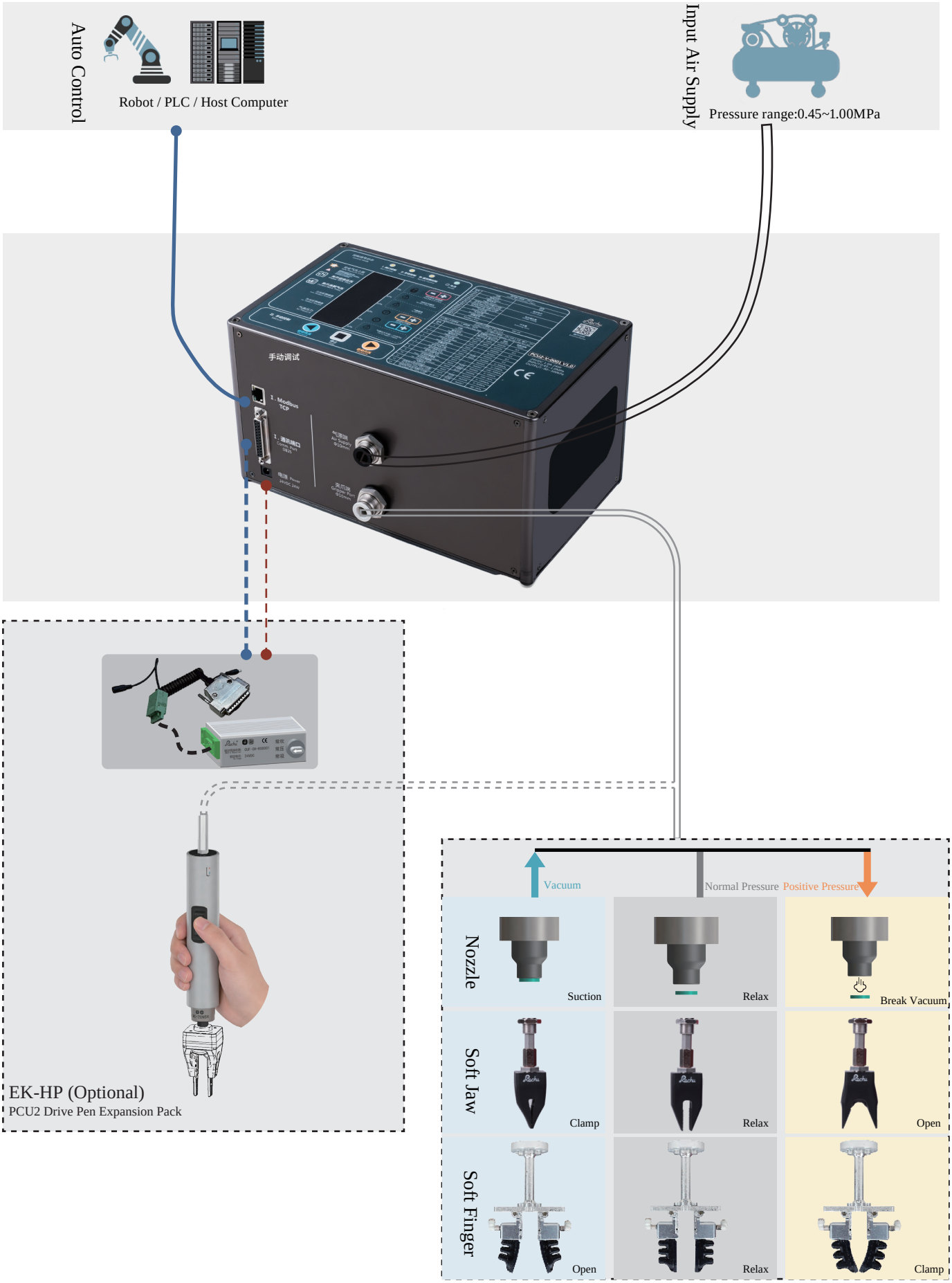
Auto Control
Robot / PLC / Host Computer
Input Air Supply
Pressure range:0.45~1.00MPa
手动调试
EK-HP (Optional)
PCU2 Drive Pen Expansion Pack
Vacuum
Normal Pressure
Positive Pressure
Nozzle
Suction
Relax
Break Vacuum
Soft Jaw
Clamp
Relax
Open
Soft Finger
Open
Relax
Clamp

Product Overview

EK-HCU Drive Pen Expansion Kit



- For use with iPCU2, ACU2-B, ACU2-H, and PCU2 series drives.
- The drive pen is equipped with a magnetic connector at the tip, allowing for quick replacement of the tip or angle adjustment.

EK-HiS
iPCU2-S/H Drive Pen Expansion Kit

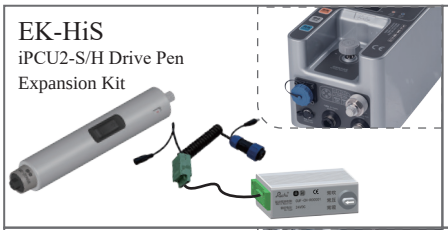

EK-HiE
iPCU2-E Drive Pen Expansion Kit

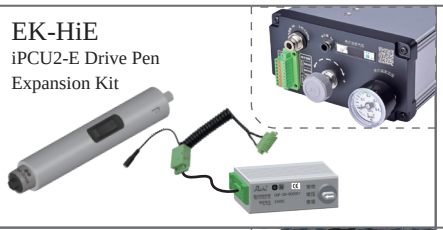

EK-HAB
ACU2-B Drive Pen Expansion Kit

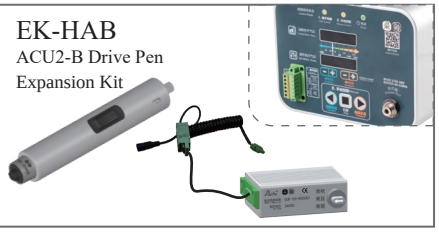

EK-HAH
ACU2-H Drive Pen Expansion Kit

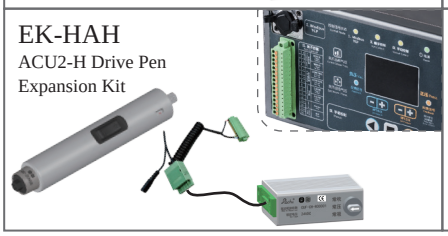

EK-HP
PCU2 Drive Pen Expansion Kit

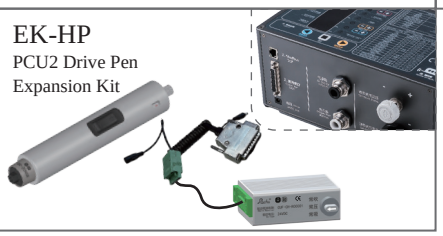

HCU-H27 Drive Pen

Charging Voltage	Type-C 5V/1A	Battery Capacity	500mAh	Size	φ27×152mm	Net Weight	91g

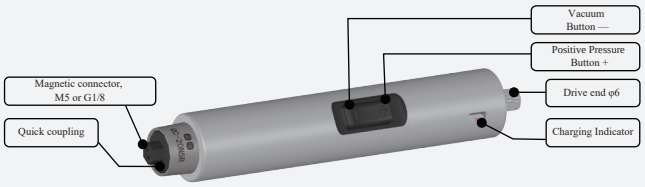

CUF-CH Drive Pen Receiver

Size	88×55×30mm	Net Weight	133g



Quick-change function	Rotation Angle	Operation Method

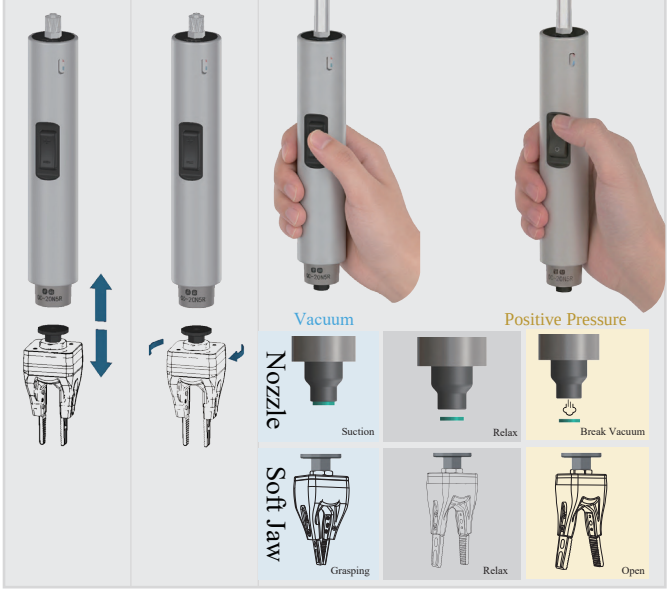

Mode Switch

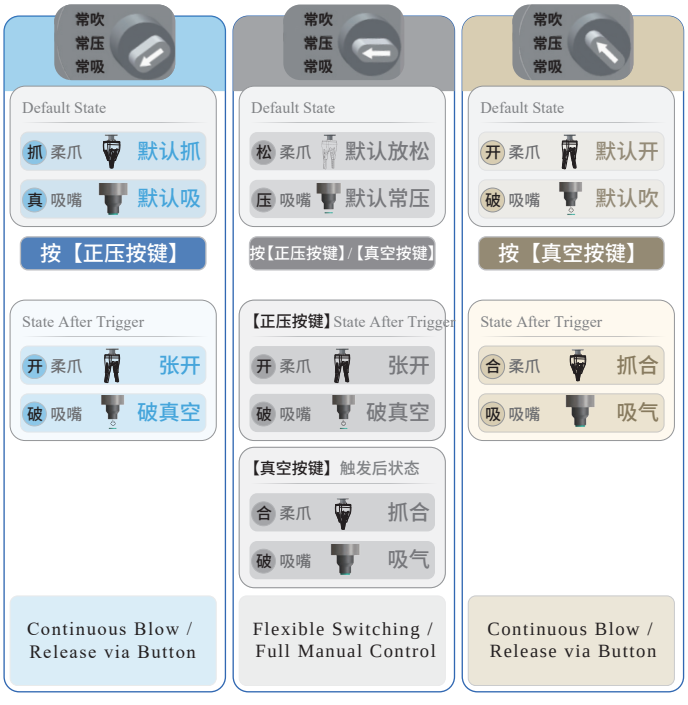

Combined driving mode

Controling of Cylinder & Finger module combination

·The combination of cylinder and finger module is a specific combination of the basic control mode

·It has the advantages of large clamping force of traditional clamping cylinder and soft and self-adaptive of flexible fingers, and the clamping force can reach up to 70N

·Independent solenoid valve control, simple structure, small size, low deployment cost.

·Grasp a wider range, can be combined with various brands of cylinder, Y cylinder, 180 degree cylinder

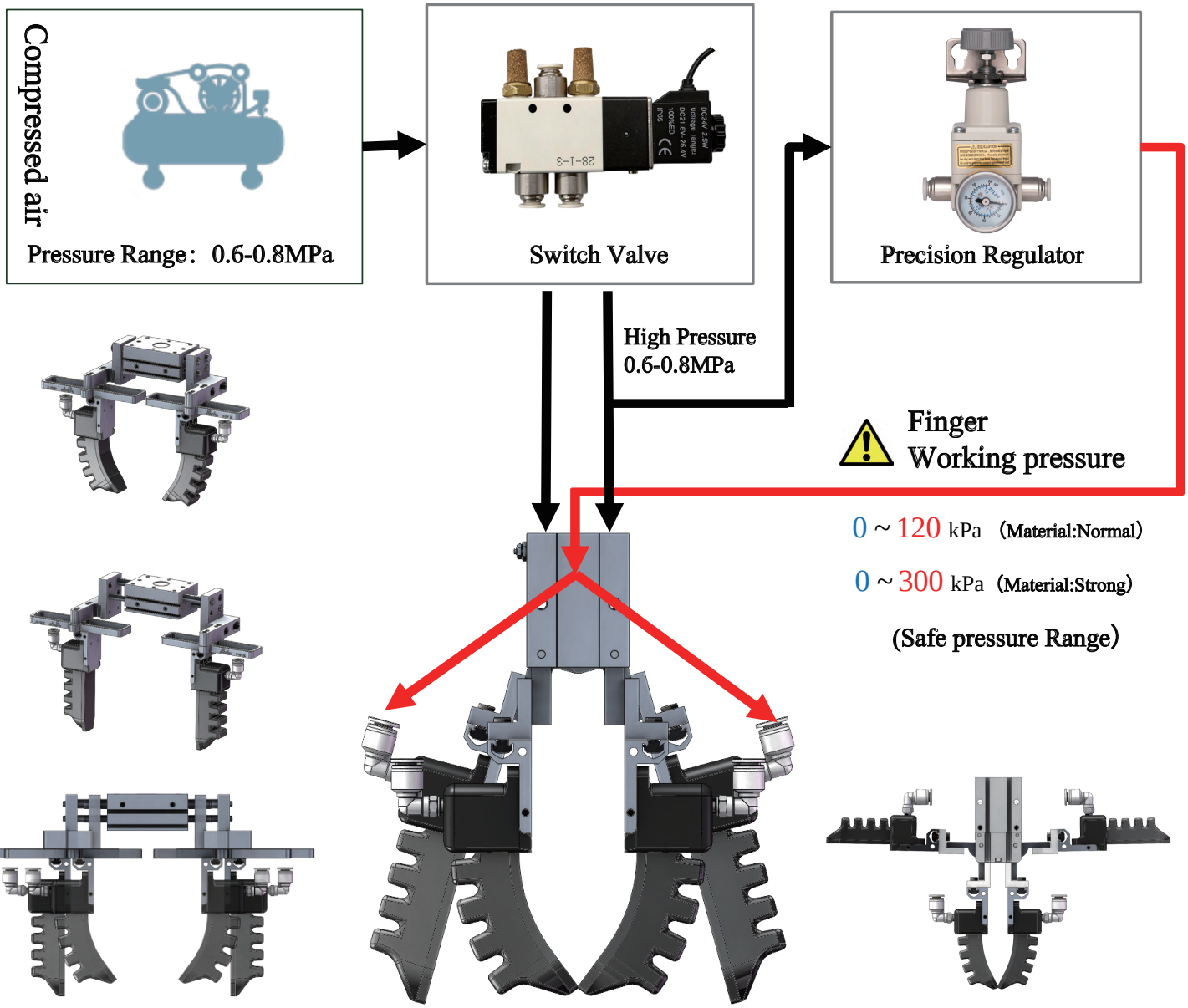

Translational cylinder

Y Cylinder

180 degree Cylinder

The air pressure must be strictly controlled within the Safe limit. Overloading may cause irreversible damage to the product.

AF

Assembling Fittings



QCM

Quick changer Module



FCM

Flange Connection Module



RF

Robot flange



SMP

Slide Mounting Plate



CP

Connector Part

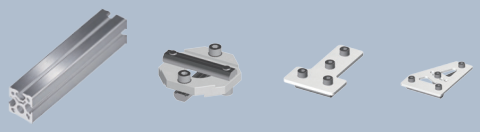

P

Profile

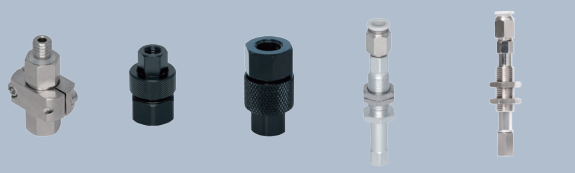

CM

Connection Module



PN

Pneumatic Fittings

Quick changer Module

Quick-change Module [QCM] is used for automatic and quick replacement of grippers. The Quick-change Module [QCM] is installed between the Flange Connection Module [FCM] and the end of the robot arm, and is divided into the robot side (R side)

QCM-01 Manual quick change module

- Conform to ls0 9409-1:2004 (i.e.GB/T14468.1:2006)
- Manual locking/unlocking
- Recommended Load 5kg, Vertical tension

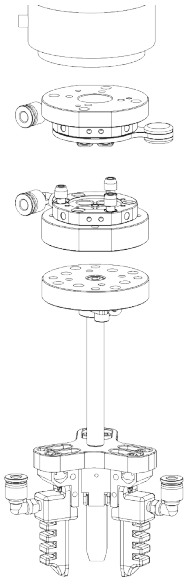

QCM-01R

(R side module, installed at the end of the robot)



QCM-01G

(G side module, mounted on the gripper end)



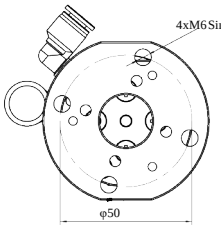

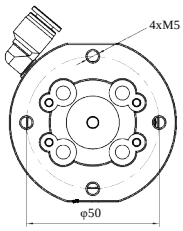

QCM-01R Weight	146g	QCM-01G Weight	135g
Vertical tension F[N]	150	Tracheal tube diameter[mm]	φ 6
Rotary torque Mt[Nm]	20	Recommended Load[kg]	5
Flip torque Mb[Nm]	10		



QCM-03 Manual quick-change disc

- The quick-change module for injection molding manipulators includes QCM-03R (manipulator side) and QCM-03G (soft gripper side)
- Quick-change function: Press the raised button on the R-side module to replace the G-side module

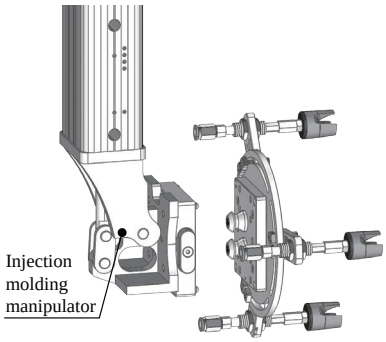

QCM-03R

(R-side module, installed at the robotic arm end)



Self-weight 126.3g

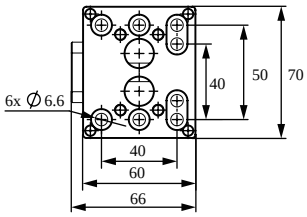

QCM-03G

(G-side module, installed at the gripper end)



Self-weight 92.5g

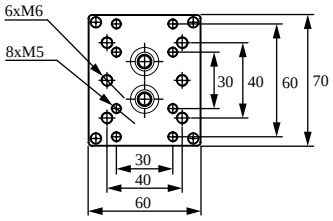

Usage method

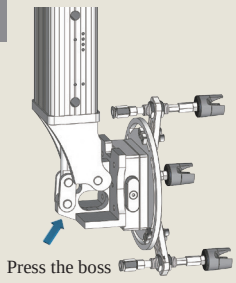

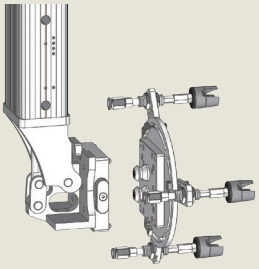

Remove the soft gripper end

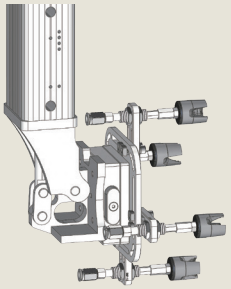

Replace the soft gripper end

QCM-04 Manual quick-change disc

- Conform to ls0 9409-1:2004 (i.e.GB/T14468.1:2006)
- Pneumatic control with air-break self-locking protection.
- Recommended Load 5kg, Vertical tension

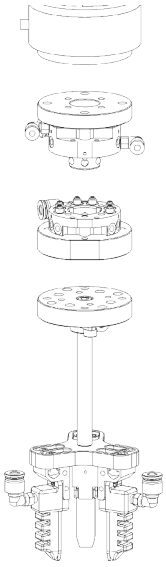

QCM-04R

(R-side module, installed at the robotic arm end)



Self-weight 356g

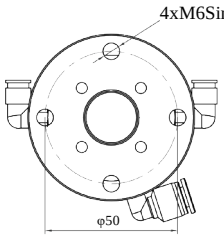

QCM-04G

(G-side module, installed at the gripper end)



Self-weight 166g

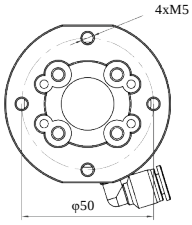

Installation/control mode

•Quick change is controlled by pneumatic valve

•The air pipe connector on the R side is connected to the Rochu drive, and the G side is connected to the gripper.

• When installing the R-side flange module, the flange plate should be installed on the robotic arm first, and then the quick change should be connected to the flange plate.

Quick change engagement control connector: M5 + φ6 air pipe

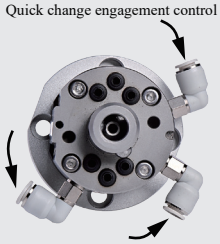

Controller air pipe connector: M5 + φ6 air pipe

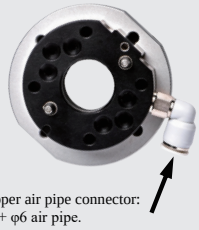

Gripper air pipe connector: M5 + φ6 air pipe.

QCM-04R QCM-04G

QCM-02 Pneumatic Quick-change Module

- Conform to ISO 9409-1:2004 (i.e. GB / T 14468.1:2006)
- Pneumatic control, air-out self-locking protection
- Recommended Load 5kg

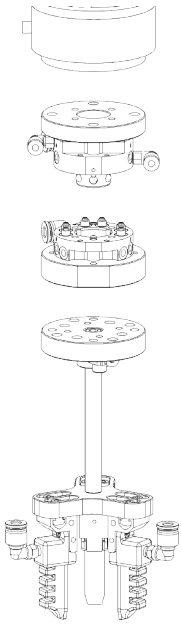

QCM-02R

(R side module, installed at the end of the robot)



Self-weight320g

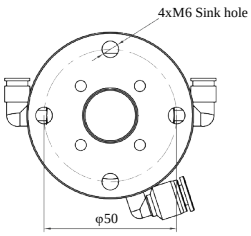

QCM-02G

(G side module, mounted on the gripper end)



Self-weight 200g

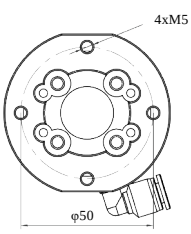

Installation/control mode

•Quick change is controlled by pneumatic valve

•The air pipe connector on the R side is connected to the Rochu drive, and the G side is connected to the gripper.

• When installing the R-side flange module, the flange plate should be installed on the robotic arm first, and then the quick change should be connected to the flange plate.

Quick change engagement control connector: M5 + φ6 air pipe

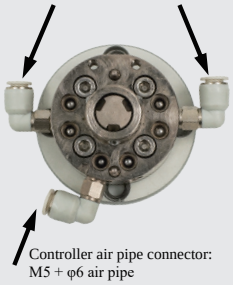

Controller air pipe connector: M5 + φ6 air pipe



Gripper air pipe connector: M5 + φ6 air pipe.

QCM-02R QCM-02G

QC-15 Soft beak plug-in quick change

· Paired mounting modules for connecting the grippers, including manipulator side modules and gripper side modules, which can be locked, rotated or quickly replaced.
· Rotation Angle: gently and easily open the locking screw, rotate the soft claw to the appropriate working Angle, after locking the screw, the soft claw is fixed, and the coaxial degree is less than 0.15mm.
· Quick-change Function: completely loosen the locking screw, can pull out the side module of the soft claw, to achieve quick replacement of the soft claw.

	QC-15W5N5	QC-15W5W5	QC-15W5N18	QC-15W5W18
Manipulator side module	 QC-15W5R	 QC-15W5R	 QC-15W5R	 QC-15W5R
Soft Gripper side module	 QC-15N5G	 QC-15W5G	 QC-15N18G	 QC-15W18G

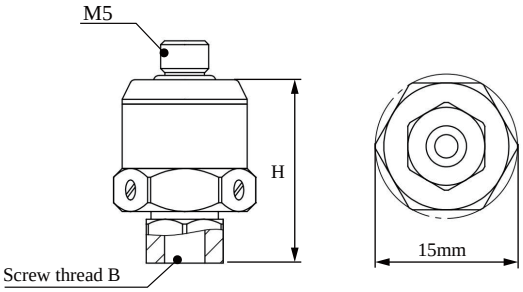

Model	Screw thred B	H	Weight
QC-15W5N5	M5 inner teeth	18.8mm	12.53g
QC-15W5W5	M5 external teeth	18.8mm	13.25g
QC-15W5N18	G1/8 inner teeth	23.3mm	17.75g
QC-15W5W18	G1/8 external teeth	18.8mm	17.41g

Installation

Rotation Angle

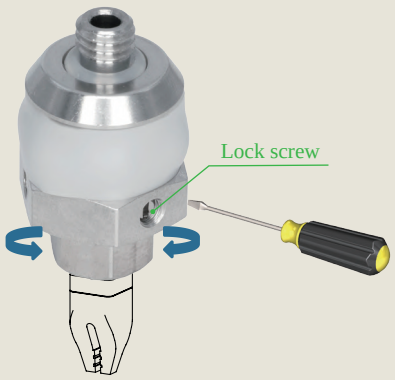

Quick- change Function

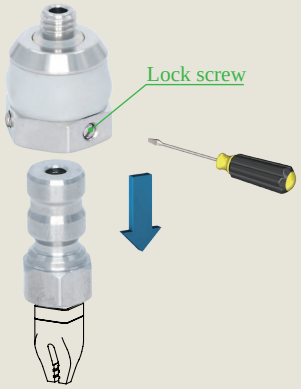

Rigid Connection Installation

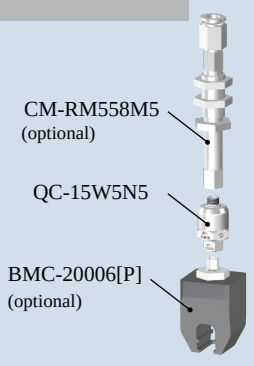

Buffer Installation

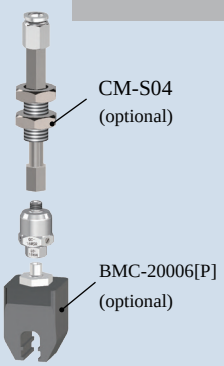

Matrix Installation

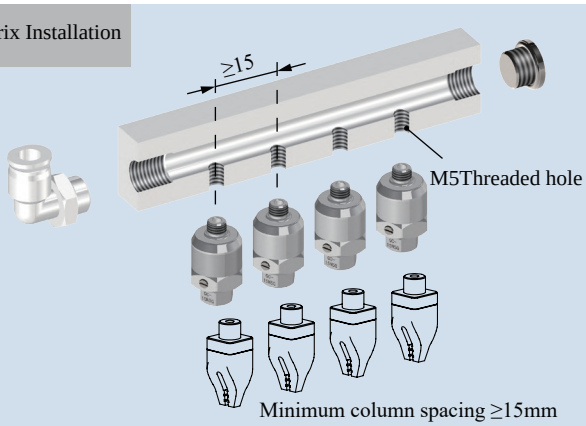

QC-16 Nozzle / Soft Gripper Quick Change

- Used for connecting nozzles or soft grippers, allowing plug-and-swap replacement, rotation, and angle locking.



Robot arm side

QC-16N5R	QC-16D5R	QC-16D8R
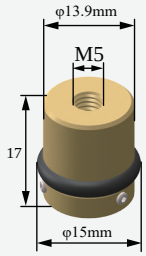	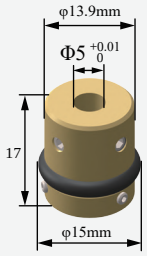	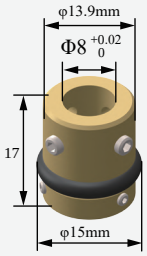

Nozzle side

QC-16N3G

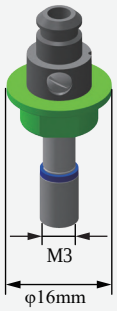

QC-16N5G

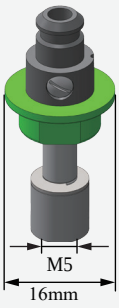

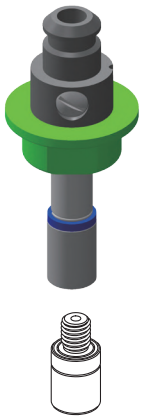

Soft gripper side

QC-16W5G



QC-16W18G





1 Insert the soft gripper	2 Insert into the female connector	3 Rotation angle	4 Angle set screw
	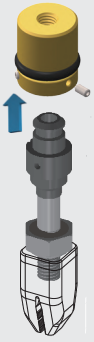	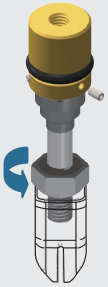	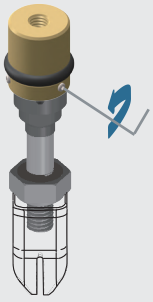

The Flange Connection Module [FCM] connects the robotic arm end to the Slip Mounting Plate [SMP] and can be used with the Quick Change Module [QCM].

FCM-S01 Sping rod flange connection module

- Meet ISO 9409-1:2004 robot flange standard. Suitable for most robot flanges
- It is used for the connection between the flexible gripper module [BM] or the flexible finger module [FMA] and the articulated robotic arm.
- The elastic force ranges from 0 to 8N, which can improve the vertical adaptability of the gripper and is suitable for grasping workpieces with large dimensional differences.

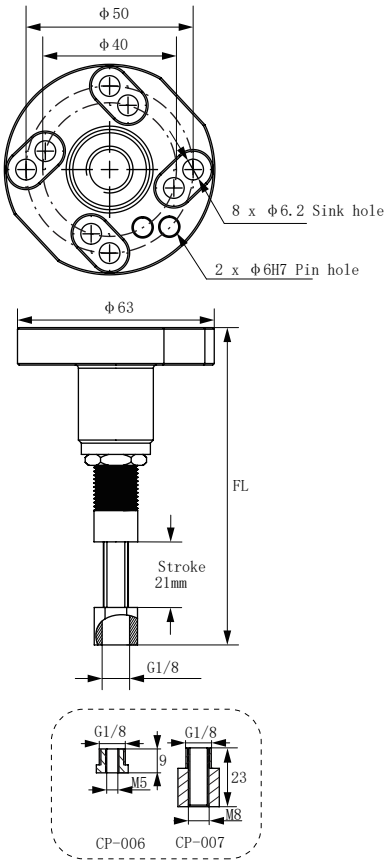



Model	Full length FL	Weight	Load
FCM-S01	95± 1	112g	500g

Fingers connection

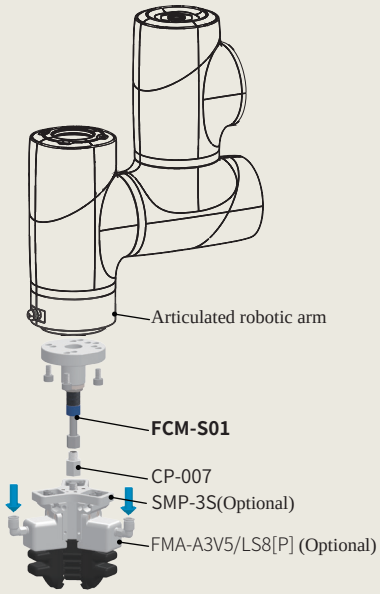

Beak connection

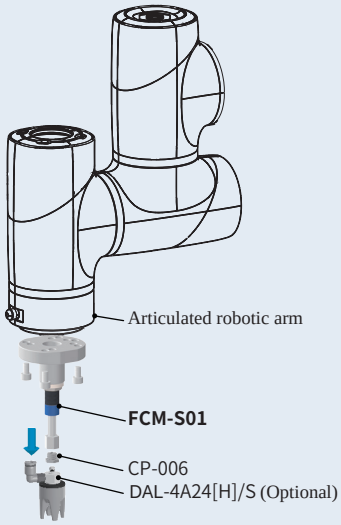

FCM-R series Rigid flange connection module

- Conform to ISO 9409-1:2004 standard (GB/T 14468.1-2006/), suitable for most robot flanges
- Used for the connection between the flexible finger modules [FMA] and the articulated robotic ar
- ms Can be used in scenarios such as high-precision handling and assembly
- Different lengths are optional

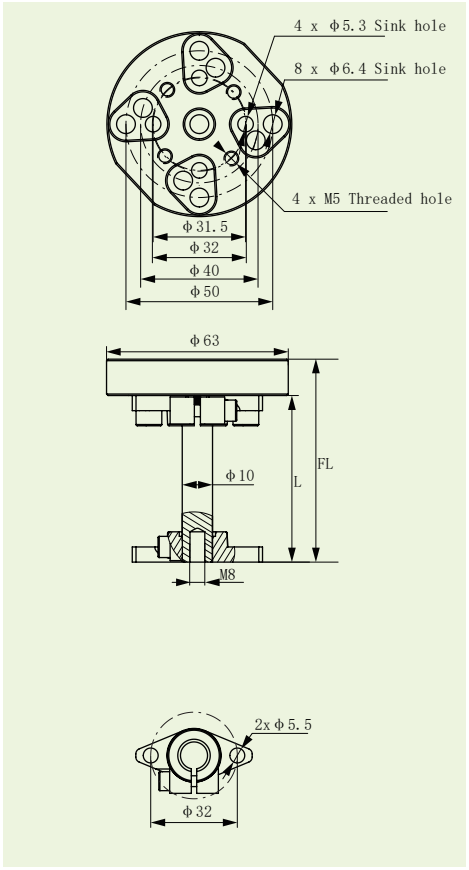

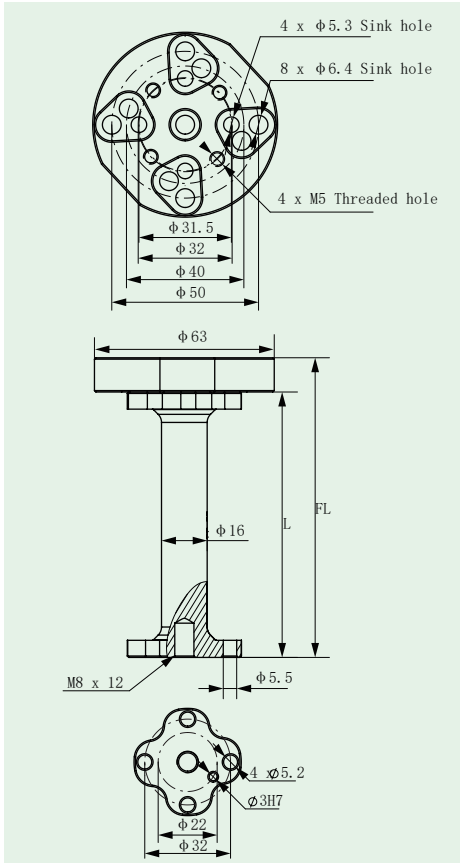



Model	Length L	Full length FL	Weight	Load
FCM-R01	30mm	42mm	112g	5kg
FCM-R02	55mm	67mm	116g	5kg
FCM-R03	70mm	82mm	120g	5kg
FCM-R04	90mm	102mm	125g	5kg
FCM-R05	110mm	122mm	129g	5kg
FCM-R08	93mm	105mm	158g	20kg

Installation method

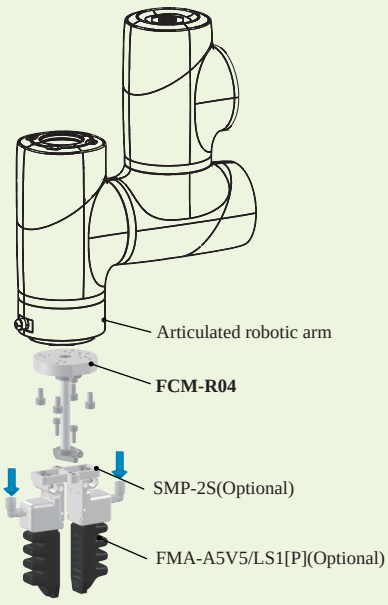

Installation method

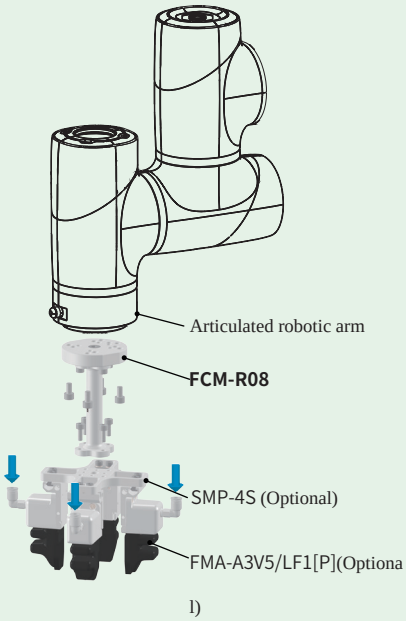

FCM-CP series MG400 flange connection module

- For connecting the flexible gripper module [BMC] or flexible finger module [FMA] to the MG400 robotic arm
- Internal multi-channel ventilation



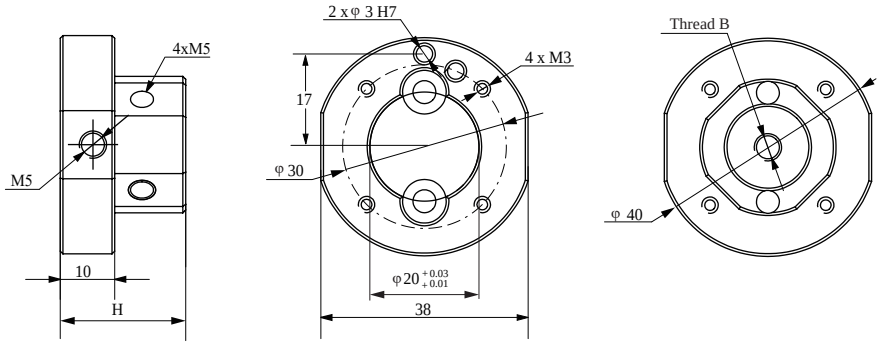

Model	Thread B	Height H	Weight
FCM-CP191	M5	23mm	40g
FCM-CP192	G1/8	24mm	40g

Direct-through installation

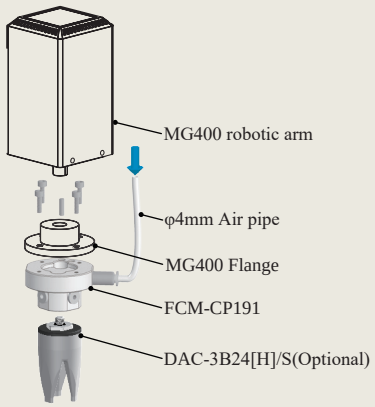

Side-through installation

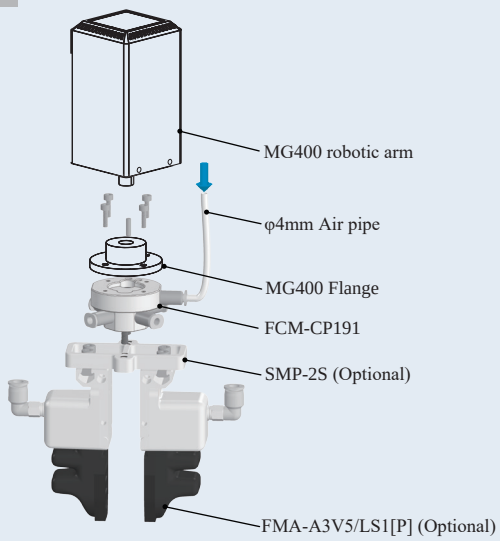

FCM -S series Scara flange module

• Used for connecting the soft gripper module [BMC] or the soft finger module [FMA] to the Scara robot.
• Internal multi-channel ventilation.
• The coaxiality can reach 0.04mm.



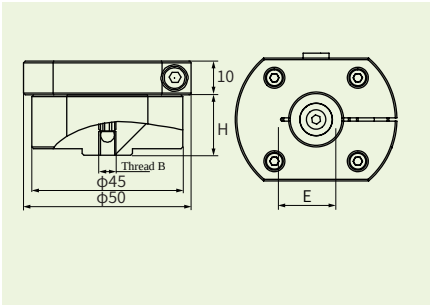

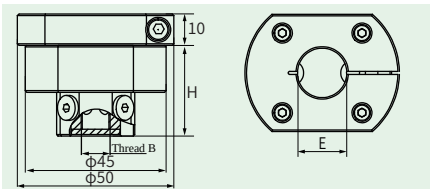

Model	Adaptable lead screw diameter E	Thread B	Height H	Weight [g]	Beak Module [BMC]	Finger Module [FMA]
FCM-S16N5	φ16mm	M5	18mm	92g	·	
FCM-S20N5	φ20mm	M5	18mm	89g	·	
FCM-S25N5	φ25mm	M5	18mm	84g	·	
FCM-S16N18	φ16mm	G1/8	19mm	92g	·	
FCM-S20N18	φ20mm	G1/8	19mm	89g	·	
FCM-S25N18	φ25mm	G1/8	19mm	84g	·	
FCM-S16FB	φ16mm	G1/8	29mm	97g	·	·
FCM-S20FB	φ20mm	G1/8	29mm	94g	·	·
FCM-S25FB	φ25mm	G1/8	29mm	89g	·	·

Installation method

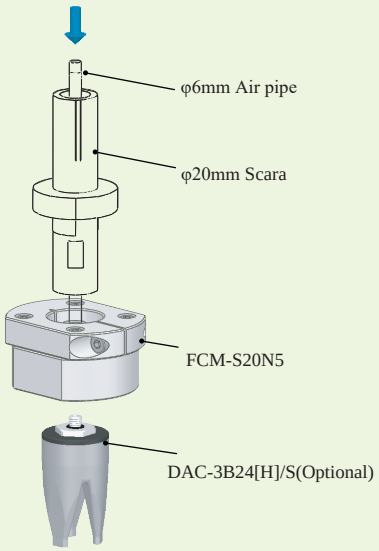

Installation method

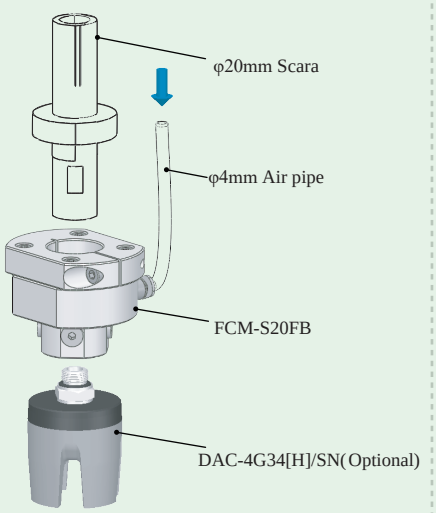

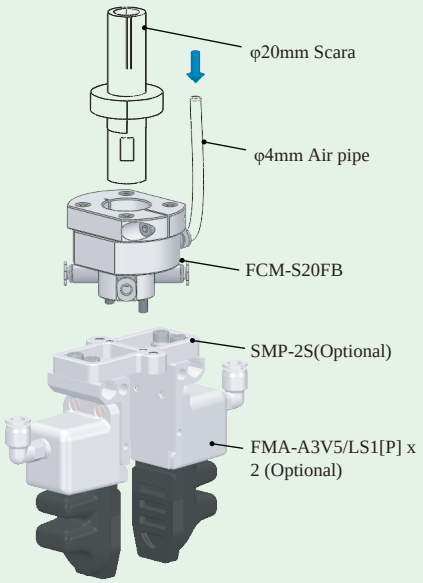

RF-S Transfer Flange

- Used in combination with RF-SCB or RF-SFB to connect to the Scara



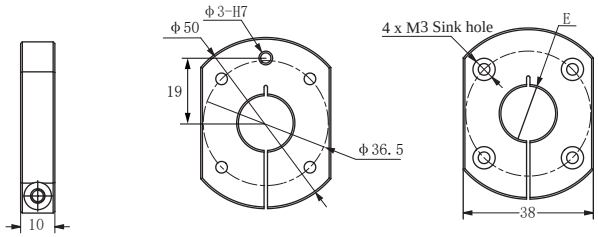

Model	Adapted lead screw diameter E	Weight
RF-S16	Φ16mm	36g
RF-S20	Φ20mm	33g
RF-S25	Φ25mm	28g

RF-SCB Transfer Flange

- Used for the connection between the soft beak module [BMC] and the Scara robot



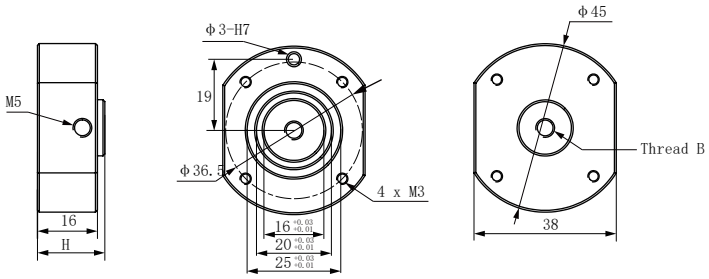

型号	螺纹B	高度H	自重
RF-SCBN5	M5	18mm	55g
RF-SCBN18	G1/8	19mm	56g

Direct-through Installation



Side-through Installation

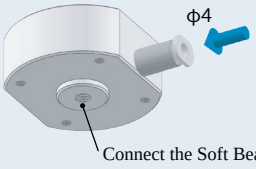

RF-SFB Transfer Flange

- Used for the connection between the soft beak module [BMC] and the Scara robot
- Can also be connected to the slip mounting plate [SMP] and install the flexible finger module [FMA].

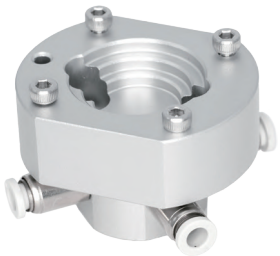

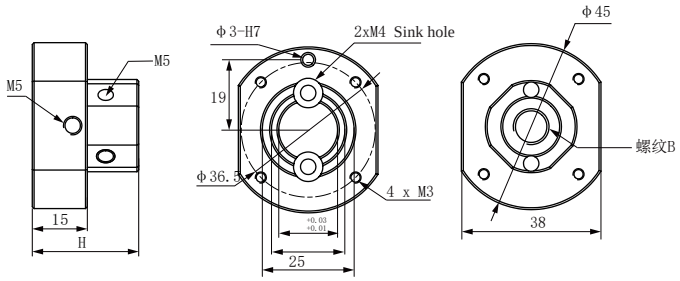

Model	Thread B	Height H	Weight
RF-SFB	G1/8	29mm	60g

Direct-through Installation

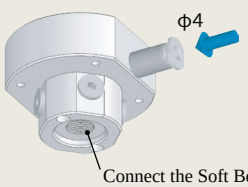

Side-through Installation

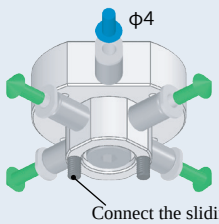

SMP-One-way series

- Can be used for the assembly between the soft finger module [FMA] or the connection module [CM] and the aluminum profile [
- P].The installation angle and position can be adjusted freely.
- Contains the accessory kit PK-SMP01.

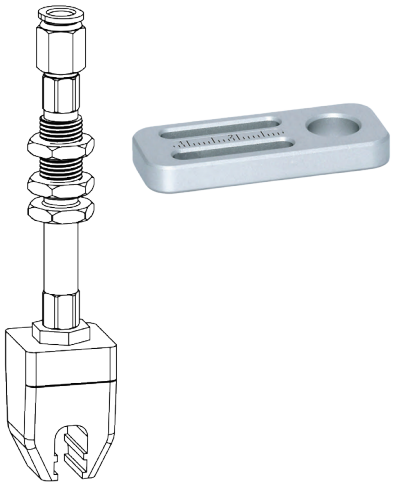

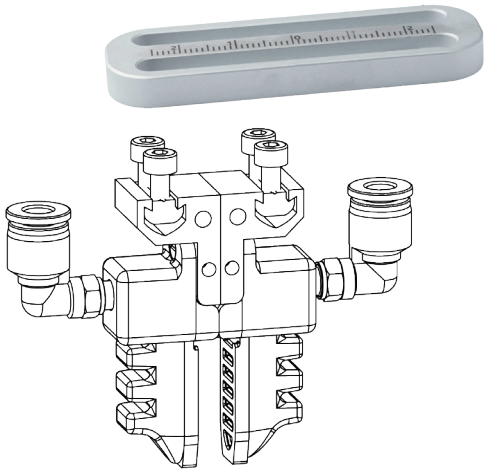

One-way soft beak series

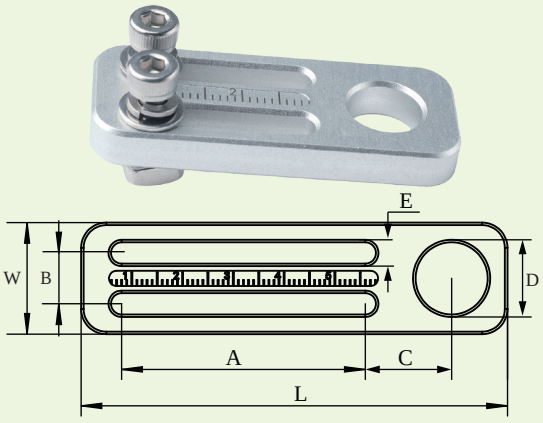

One-way soft finger series

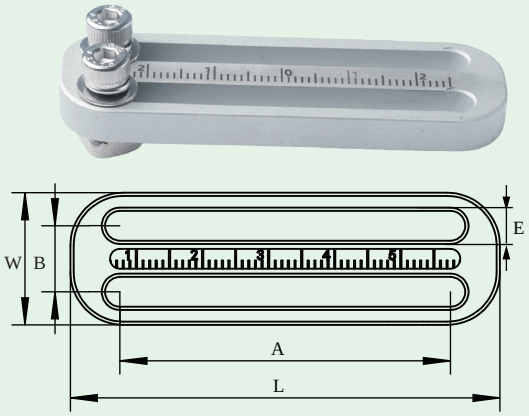

	Model	Slot Length A [mm]	Slot Space B [mm]	Slot Width E [mm]	Length L [mm]	Width W [mm]	Thickness H [mm]	Slot Spacing C [mm]	Mounting hole D [mm]	Weight [g]
One-way soft beak series	SMP-13	20	10	4.2	50	20	6	14	10.2	10.7
	SMP-14	48	10	4.2	80	20	6	14	10.2	16.2
	SMP-15	80	10	4.2	110	20	6	14	10.2	21.6
	SMP-16	110	10	4.2	140	20	6	14	10.2	27.1
	SMP-1420	20	10	4.2	56	22	6	17	14.2	14
	SMP-1448	48	10	4.2	84	22	6	17	14.2	20
One-way soft finger series	SMP-01	50	10	4.5	65	20	6			10.8
	SMP-02	75	10	4.5	90	20	6			16.1
	SMP-03	100	10	4.5	115	20	6			18.5

SMP-R unidirectional rotation series

· Can be used for the assembly between the soft beak module [BM], the connection module [CM] and the aluminum profile [P].
· Adjusting angle: Adjusting the screw can loosen or lock the installation block, and adjust the angle of the soft beak in all directions.

SMP-R1020	SMP-R1430
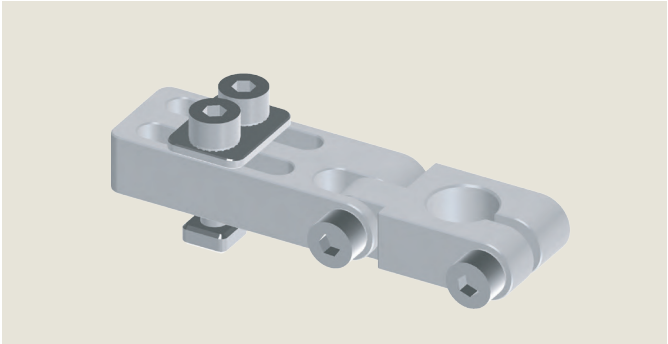	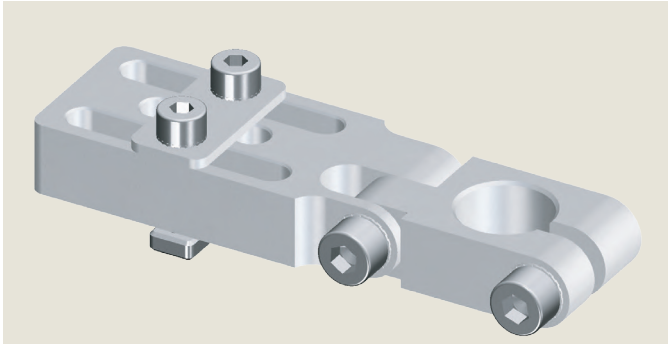

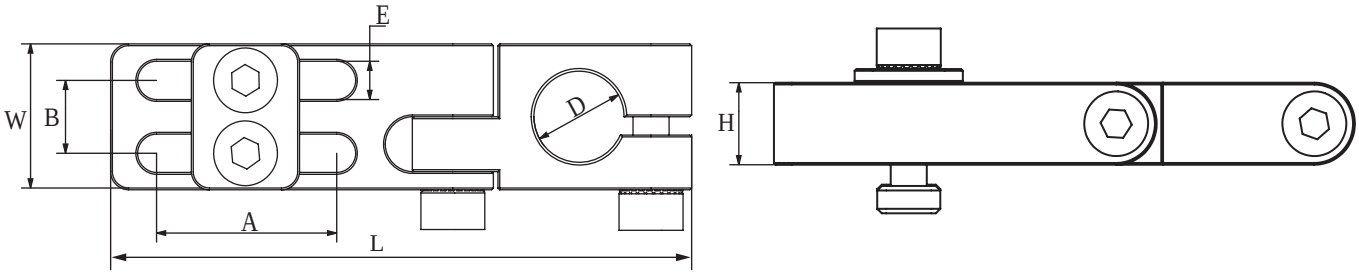

Model	Mounting hole D [mm]	Width W [mm]	Length L [mm]	Thickness H [mm]	Slot Length A [mm]	Slot Space B [mm]	Slot Width E [mm]	Weight [g]
SMP-R1020	10	16	64.5	9	20	8	4.2	30
SMP-R1430	14	25	85	11	30	15	5.2	50

Adjusting angle

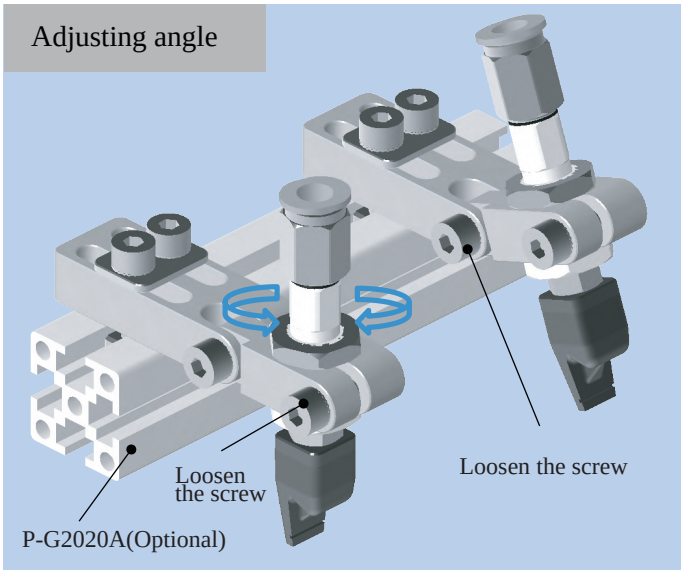

Installation method

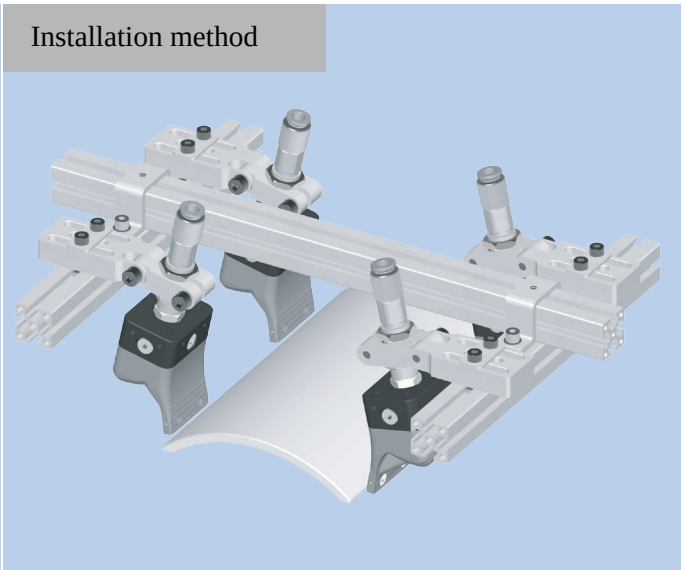

SMP-Multidirection series

- Divided into different styles according to shape and groove length.
- Can be used for the assembly between the finger module [FMA] and the flange connection module
- [FCM].The installation angle and position of the finger module [FMA] can be freely adjusted.

	Model	Slot Length A [mm]	Thickness [mm]	Atmosphere Fingertip Distance Dn [mm] Dnmin~Dnmax		Weight [g]
				V2,V4 Finger Moduel	V3,V5 Finger Moduel	
Two-way	SMP-2S	20	8	40~69	10~37	18.2
	SMP-2L	45	8	40~119	10~87	28.2
Three-way	SMP-3S	15	8	58~82	28~50	34.6
	SMP-3L	50	8	58~152	28~120	54.1
Four-way	SMP-4S	22	8	72~104	41~72	55
	SMP-4L	67	8	72~194	41~162	89.5
Five-way	SMP-5S	23	10	91~112	53~80	95.4
	SMP-5L	78	10	91~222	53~109	181

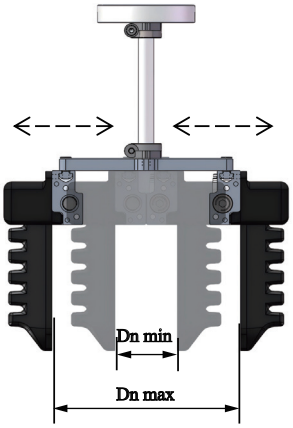

The maximum clamping range of the gripper combination is Gmax = Dnmax + 2Hmax.
For Hmax, please refer to the parameter page of the finger module.

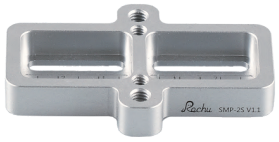

SMP-2S



SMP-2L

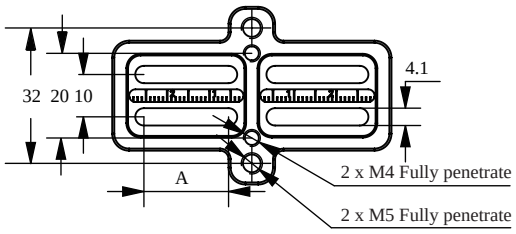



SMP-3S



SMP-3L

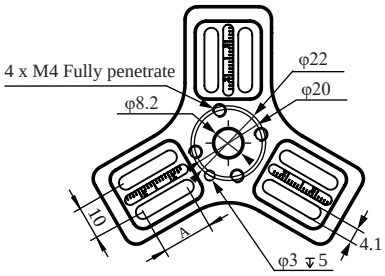



SMP-4S

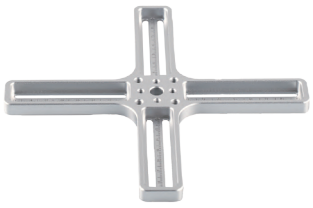

SMP-4L

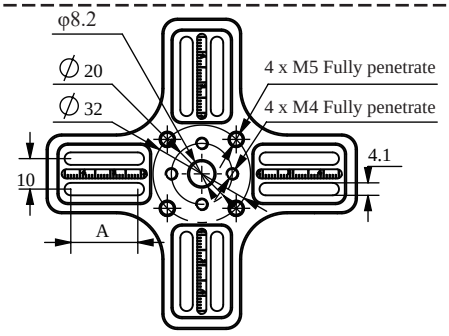



SMP-5S



SMP-5L

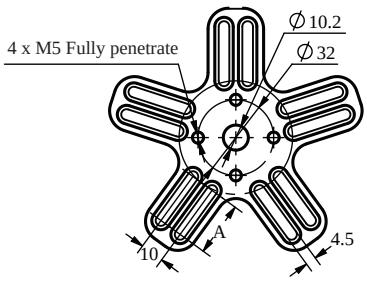

CP-194 Connector Part

- Cross mounting bracket for the profile P-G2020A

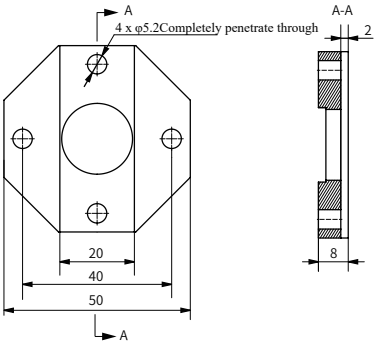

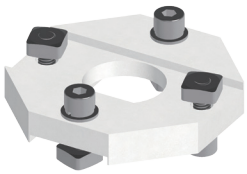

Suitable for the P-G2020A series of profiles

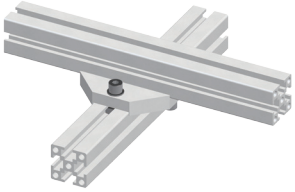

Self-weight 46g

CP-004 Connector Part

- A multi-purpose mounting plate on which the finger module [FMA] or the aluminum profile [P] can be installed.
- Installed at the end of the Flange Connection Module [FCM]

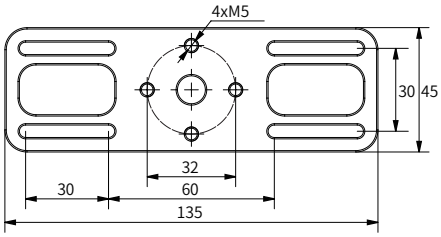

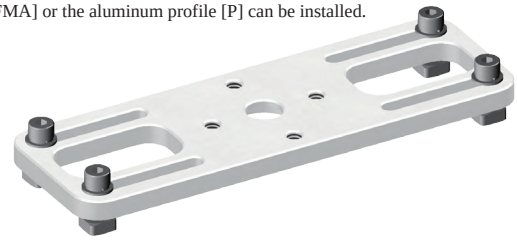

Self-weight 65g

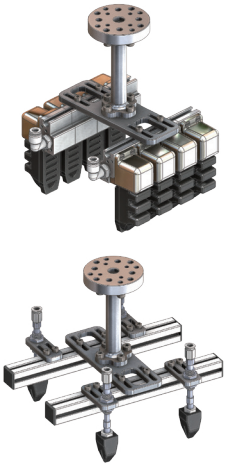

CP-195 Connector Part

- Multiple [SMP] sliding plates & [BM] gripper modules can be installed in a circular layout with adjustable spacing, position & angle.
- Installed at the end of the Flange Connection Module [FCM] or at the end of a commonly used injection molding robotic arm.

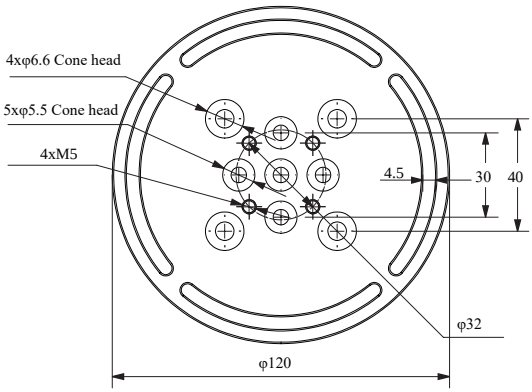



Self-weight 198.2g

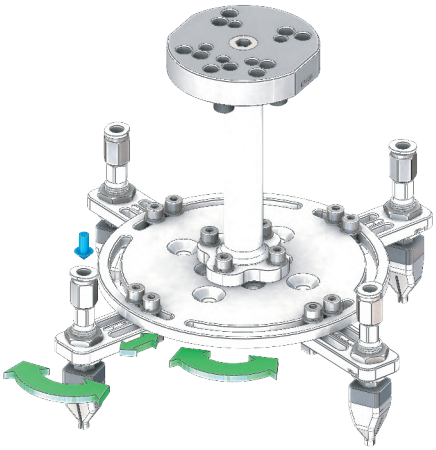

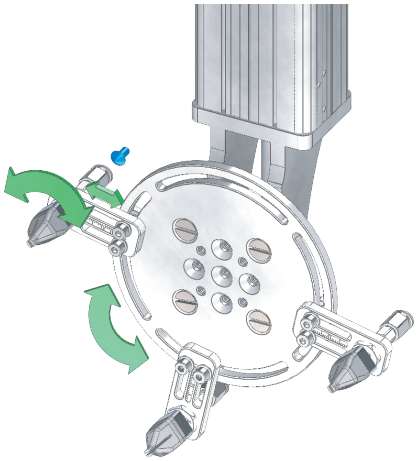

Air intake mode & Attitude adjustment

CP-196 Connector Part

- Multiple [SMP] sliding plates & [BM] gripper modules can be installed in a square layout with adjustable spacing, position & angle.
- Installed at the end of the Flange Connection Module [FCM] or at the end of a commonly used injection molding robotic arm.

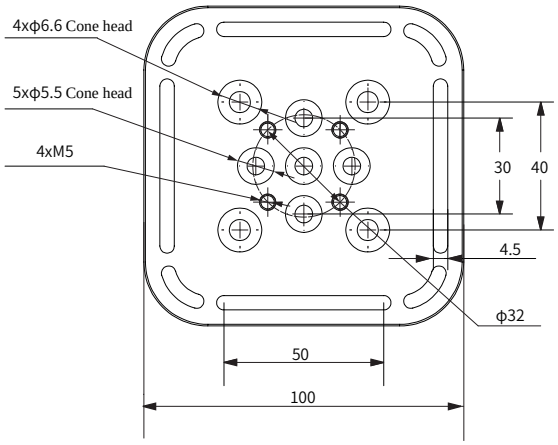



Self-weight 177.2g

Air intake mode & Attitude adjustment

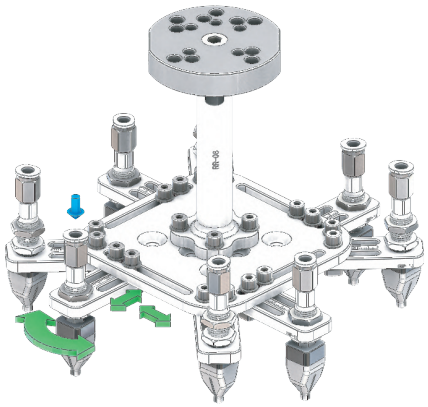

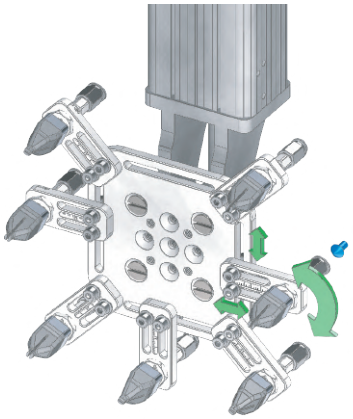

CP-AC Series Soft Fingers Rotary Installation Module

- Used to adjust the installation angle of the flexible finger module [FMA]
- Installed between the flexible finger module [FMA] and the sliding mounting plate [SMP].



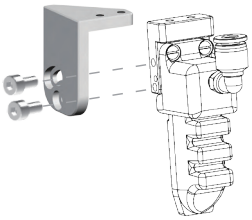

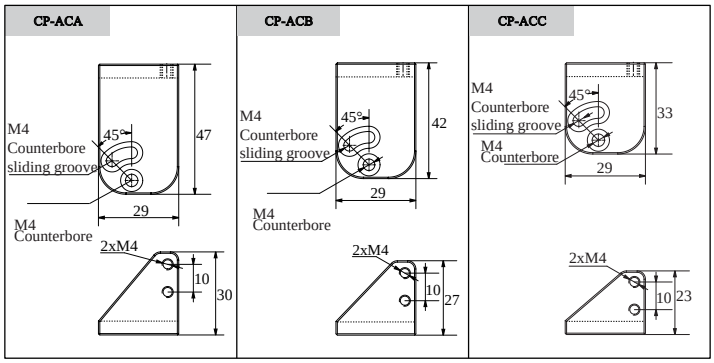

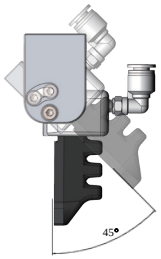

Model		CP-ACA	CP-ACB	CP-ACC
Compatibility of FMA	V1			
	V2	⊙	⊙	
	V3	⊙	⊙	⊙
	V4			
	V5			
Self-weight[g]		22	19	15

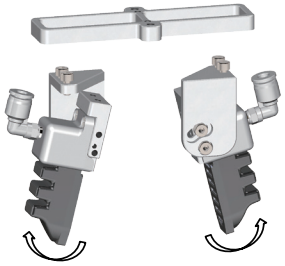

P-R3030 Series Profile

- Pneumatic aluminum profile for the arranged installation of multiple soft grippers, compatible with TN-004 single-hole nuts or TN-005 double-hole nuts.
- The profile has a built-in air passage for mounting soft grippers, and the air vents can be tapped with G1/8 thread.

Model	Length [mm]	Weight [g]
P-R3030<500>	500	688
P-R3030<1000>	1000	1375
P-R3030<1500>	1500	2062



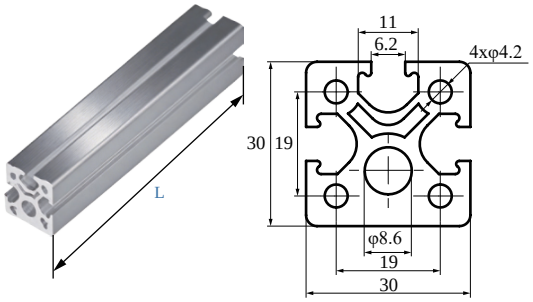

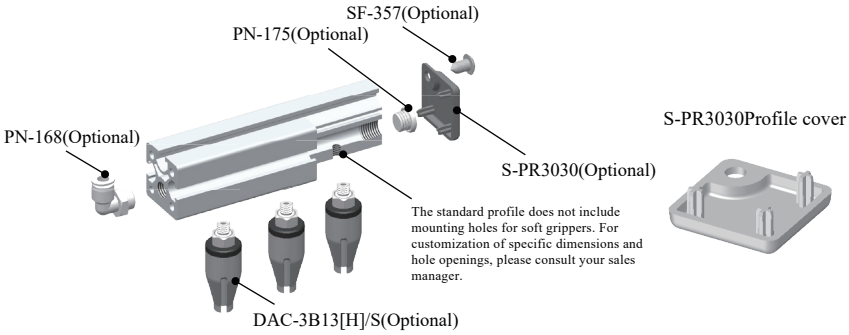

CP-200 Cross mounting bracket

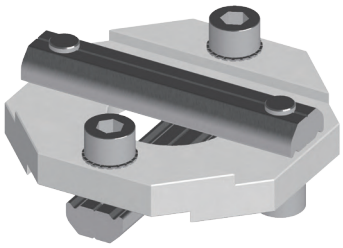

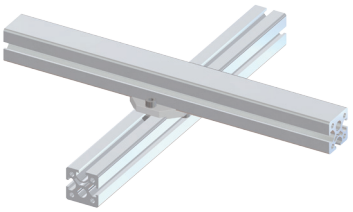

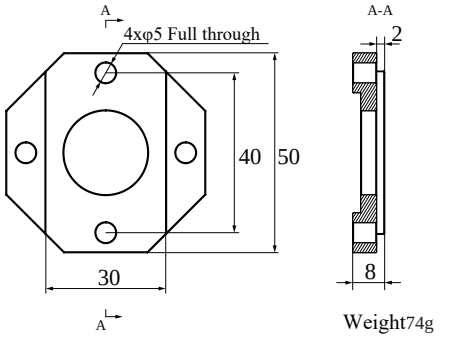

Weight74g

CP-198 T-type fixing bracket

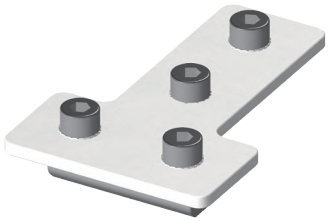

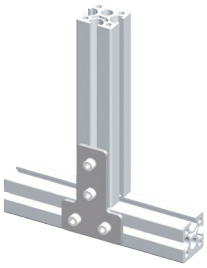

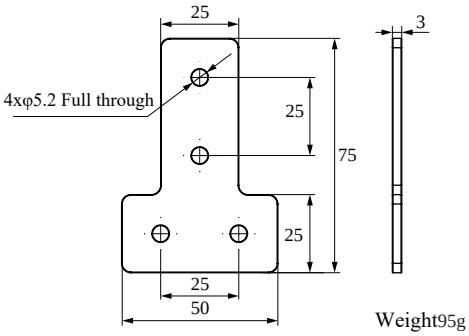

Weight95g

CP-199 Angle adjustable bracket



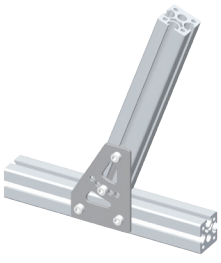

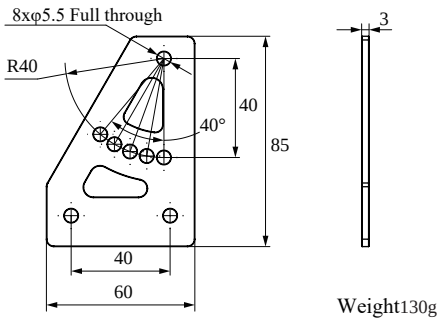

Weight130g

CM-RS18 Rotary Joint

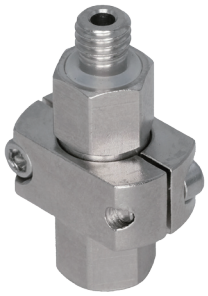

- The weight of the product is only 13g, small and lightweight
- Suitable for multiple Connection Modules: CM-RM525M5, CM-RM558M5, CM-S04, CM-S05, CM-S06, CM-S07
- The swivel can be locked or relaxed by adjusting the screws on one side of the swivel
- When the rotary joint is relaxed, the freedom of rotation in the Z-axis direction is unlocked and the rotation Angle can be adjusted
- When the rotary joint is locked, the rotation degree of freedom in the Z-axis direction is locked, and the rotation Angle cannot be adjusted

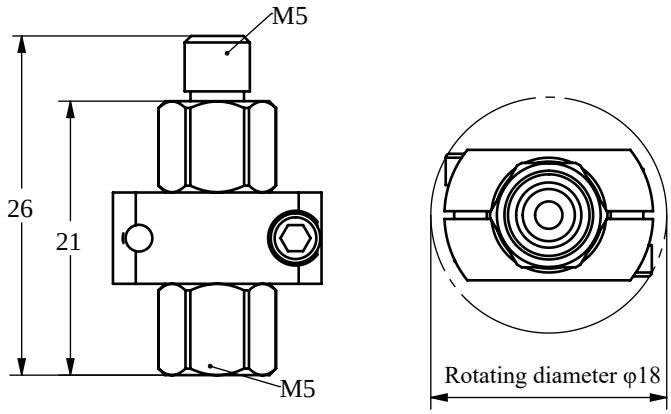

BMC Straight Fitting Installation

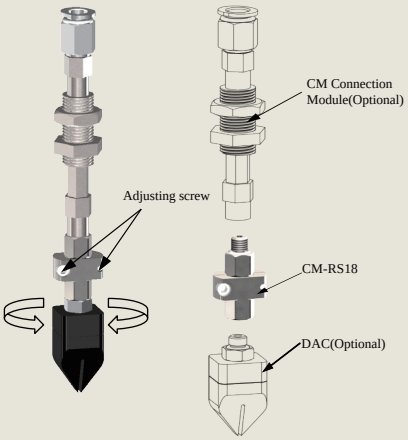

DAL Side Fitting Installation

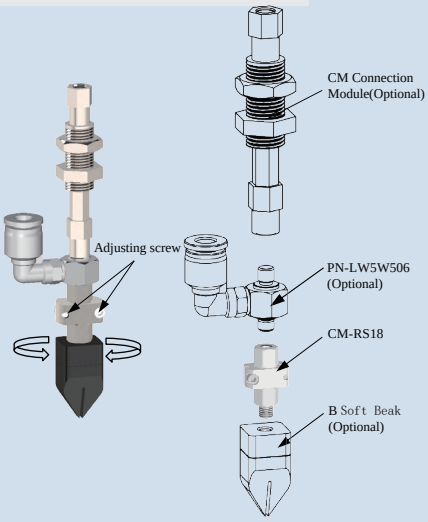

Side-by-side installation

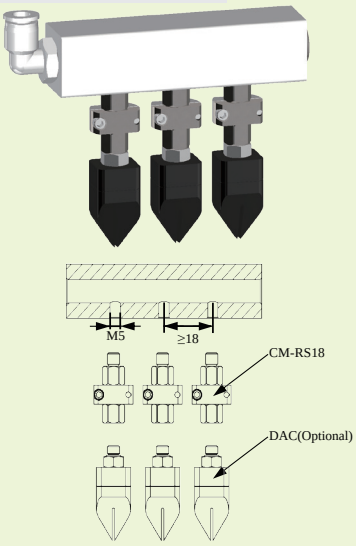

CM-RC14 Rotary Joint series

- Rotation angle: Rotate the outer ring to loosen or tighten the joint and adjust the angle of the soft beak.
- Compact size: The maximum rotating diameter is 14mm.

CM-RC14N5N5	CM-RC14N5W5	CM-RC14W5N5	CM-RC14W5W5
			

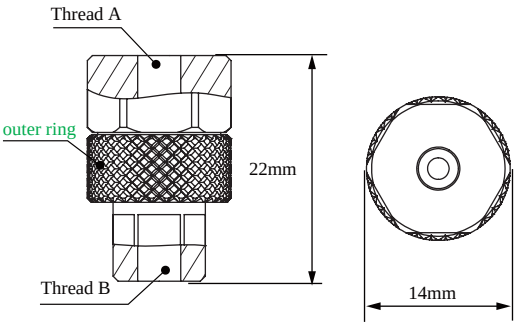

Model	Thread A	Thread B	Weight
CM-RC14N5N5	Internal thread M5	Internal thread M5	6.1g
CM-RC14N5W5	Internal thread M5	External thread M5	6.6g
CM-RC14W5N5	External thread M5	Internal thread M5	6.8g
CM-RC14W5W5	External thread M5	External thread M5	7.2g

Rotation angle

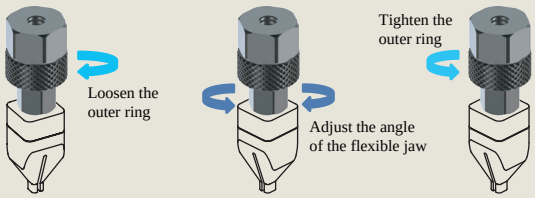

DAL Side Fitting Installation

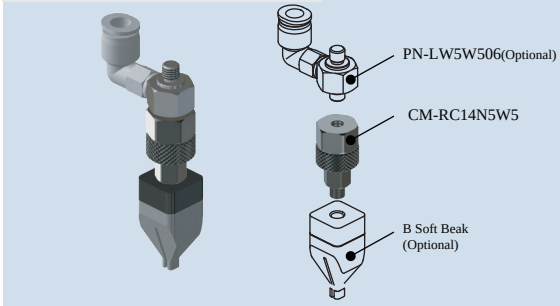

Side-by-side installation

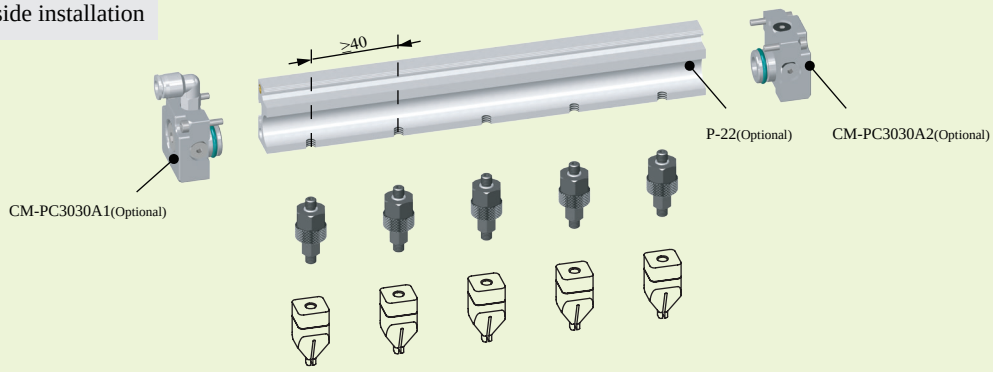

CM-RC18 Rotary Joint series

- Rotation angle: Rotate the outer ring to loosen or tighten the joint and adjust the angle of the soft beak.
- Compact size: The maximum rotating diameter is 18mm.

CM-RC18N18N18	CM-RC18N18W18	CM-RC18W18N18	CM-RC18W18W18
			

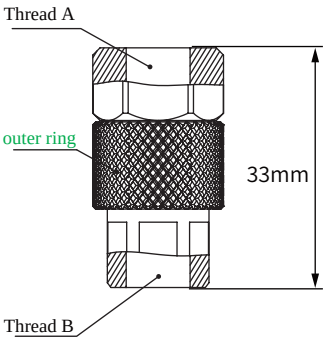

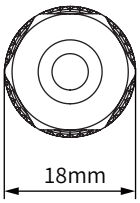

Model	Thread A	Thread B	Weight[g]
CM-RC18N18N18	Internal thread G1/8	Internal thread G1/8	14.1
CM-RC18N18W18	Internal thread G1/8	External thread G1/8	15.8
CM-RC18W18N18	External thread G1/8	Internal thread G1/8	15.9
CM-RC18W18W18	External thread G1/8	External thread G1/8	17.6

Rotation angle

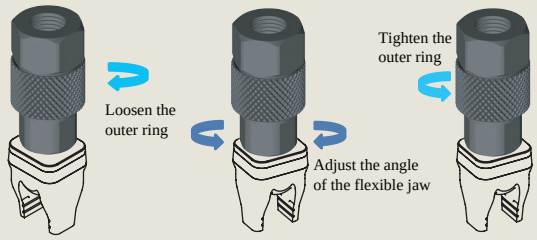

DAL Side Fitting Installation

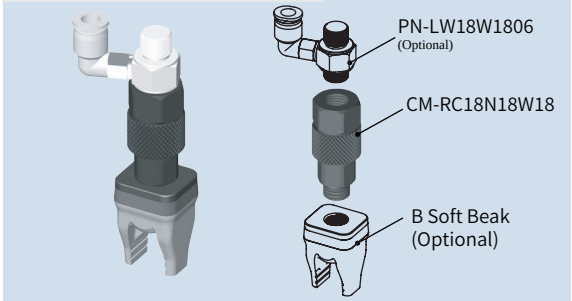

Side-by-side installation

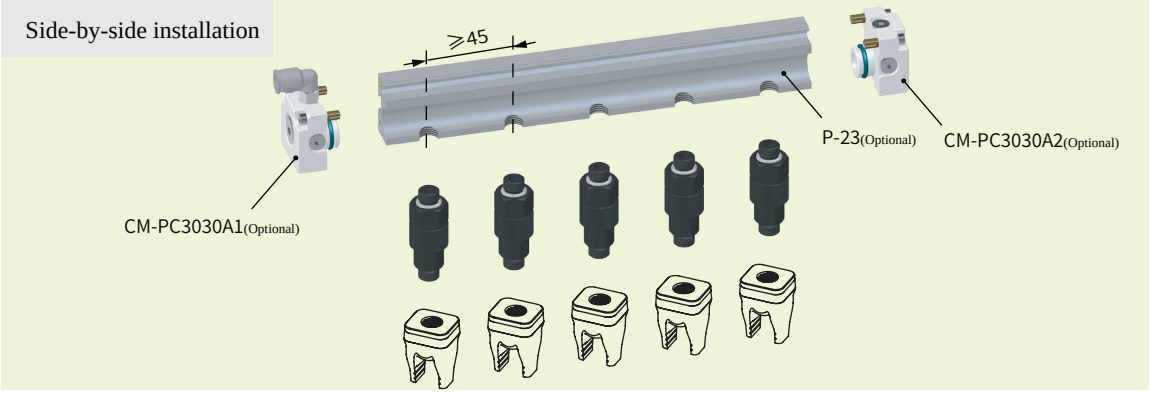

CM-R Soft Beak rigid connection module series

- Aluminum alloy rigid structure design, can be used for high positioning accuracy scenes.
- Soft Beak Module [BMC/DAL] can be installed at the end.
- Can be installed with Slide Mounting Plate [SMP].

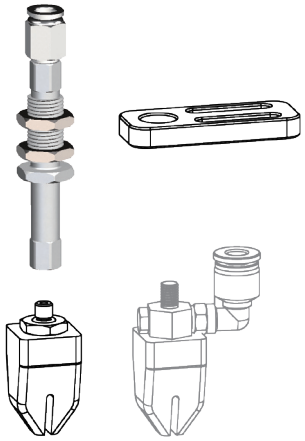

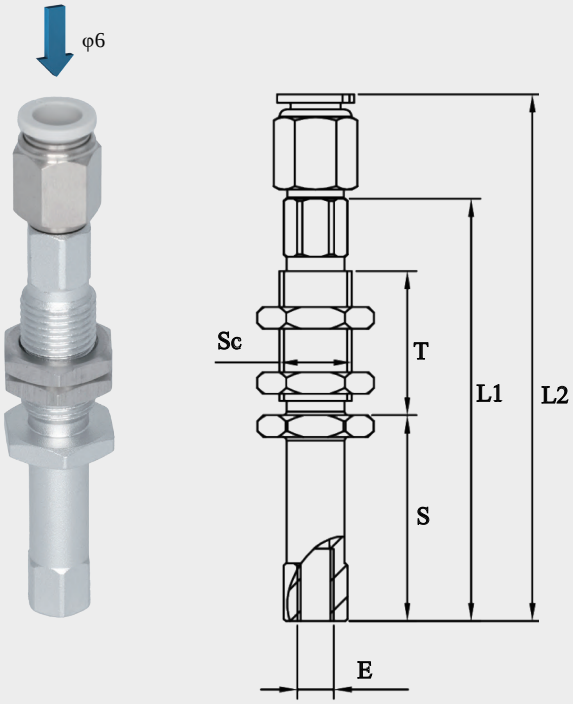

Model	S	T	L1	L2	Weight	E	Sc	Recommend -ed load	SMP Adaptive	Pipe Diameter	Positioning accuracy	Rotation accuracy
CM-RM525M5	3mm	12mm	25mm	39.5mm	11g	M5	M10x1	500g	YES	6mm	±0.01mm	±0.01°
CM-RM558M5	28.5mm	20mm	58mm	73mm	17g	M5	M10x1	500g	YES	6mm	±0.01mm	±0.01°
CM-RG1840G18	9.5mm	16.5mm	40mm	57mm	33g	G1/8	M14x1	1500g	NO	6mm	±0.01mm	±0.01°
CM-RG18128G18	59mm	47mm	128mm	145mm	58g	G1/8	M14x1	1500g	NO	6mm	±0.01mm	±0.01°

CM -S Soft Beak buffer connection module series

- It has elastic cushioning function. We do not recommend it to be used in scenarios requiring high Positioning accuracy
- Soft Beak Module [BMC/DAL] can be installed at the end.
- Some Modesl ca be installed with Slide Mounting Plate[SMP]

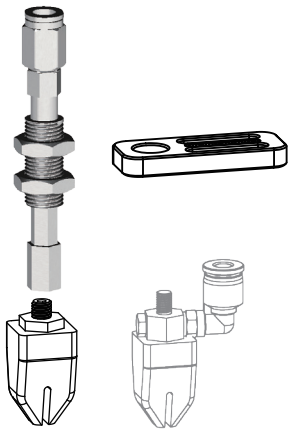

CM-SN51011B | CM-SN51015B | CM-S04 | CM-S05 | CM-S01 | CM-S02

CM-S06 | CM-S07

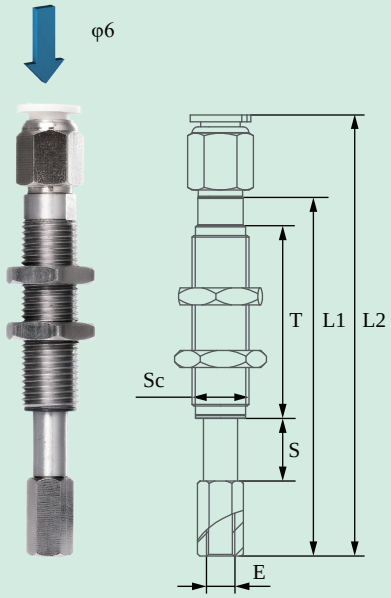

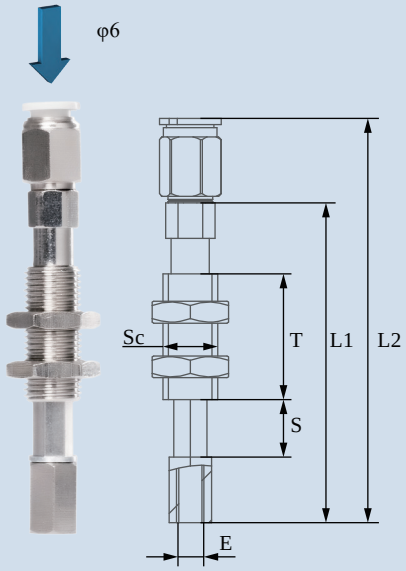

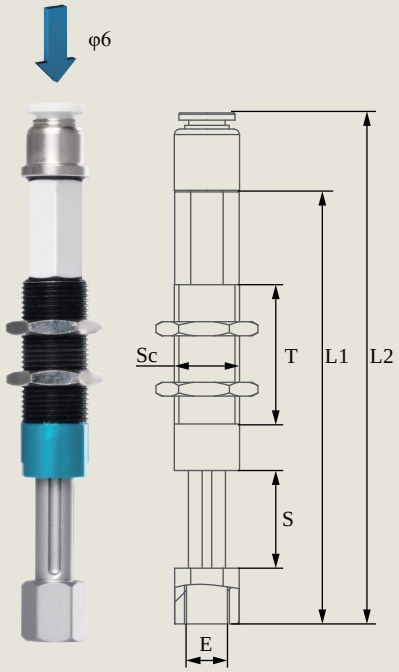

Model	S	T	L1	L2	Weight	E	Sc	Elastic buffer force	Recommend -ed load	Pipe Diameter	Positioning accuracy	Rotation accuracy
CM-SN51011B	11mm	33.9mm	63.1mm	77.7mm	25.5g	M5	M10x1	0~3N	300g	6mm	± 0.2 mm	± 0.4 °
CM-SN51015B	15mm	39mm	72.8mm	87.4mm	27.7g	M5	M10x1	0~3N	300g	6mm	± 0.2 mm	± 0.4 °
CM-S04	10.5mm	23mm	58.5mm	73.9mm	28g	M5	M10x1	0~3N	300g	6mm	± 0.5mm	± 1.5 °
CM-S05	20mm	51mm	96mm	111.4mm	43g	M5	M10x1	0~3N	200g	6mm	± 0.5mm	± 1.5 °
CM-S06	30mm	51mm	106mm	121.4mm	50g	M5	M10x1	0~3N	200g	6mm	± 0.5mm	± 1.5 °
CM-S07	40mm	77mm	142mm	157.4mm	56g	M5	M10x1	0~3N	200g	6mm	± 0.5mm	± 1.5 °
CM-S01	21mm	30mm	93mm	110mm	38.4g	G1/8	M14x1	0~10N	800g	6mm	± 0.5mm	± 0.8 °
CM-S02	36mm	50mm	128mm	145mm	45.4g	G1/8	M14x1	0~10N	800g	6mm	± 0.5mm	± 0.8 °

PN-Pneumatic joint series

- The plug used for connecting or disconnecting pneumatic circuits with soft beaks is divided into two types of connection threads: M5 and G1/8.
- This series is divided into two types: straight plug and side plug (quick insertion).

Straight connector

PN-CW5D11

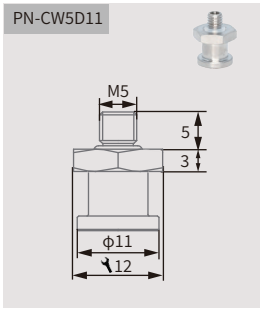

PN-CW5A11

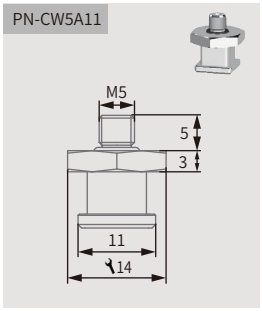

PN-CW5N5

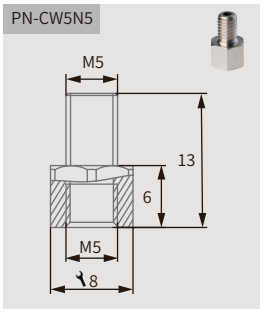

PN-CW5W5

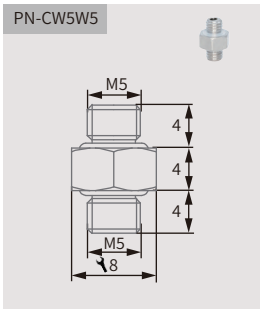

PN-CW5W5L

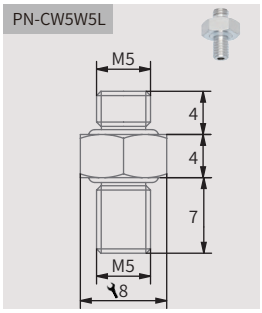

PN-CW5N5L

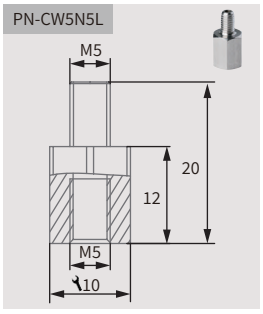

PN-CW5W18

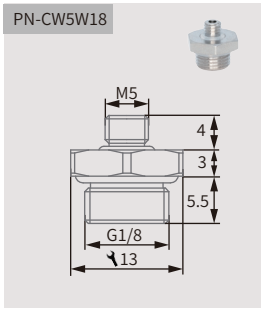

PN-CW5W18L

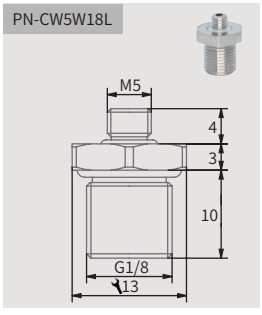

PN-CW5W18N

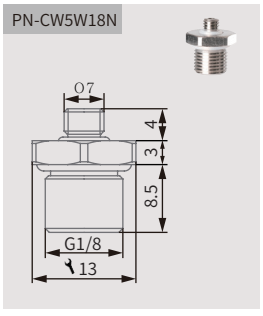

PN-CW18W18

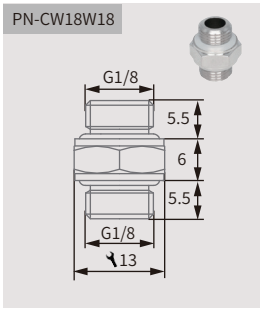

PN-CW18W18L

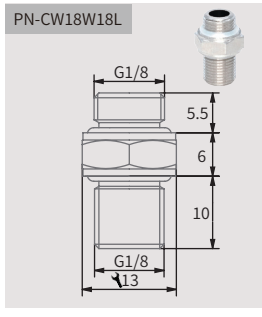

PN-CW18W18N

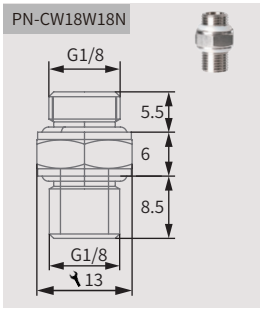

Side-pass connector

PN-LW5D1106

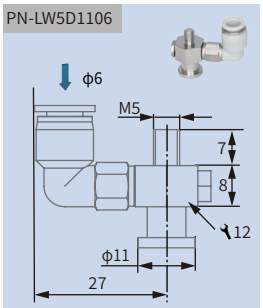

PN-LW5N506

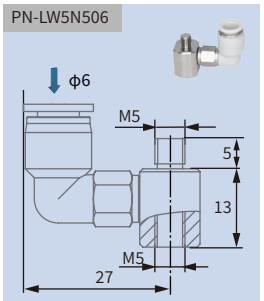

PN-LW5W506

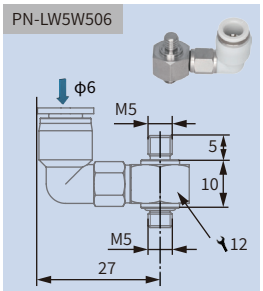

PN-LW5W1806

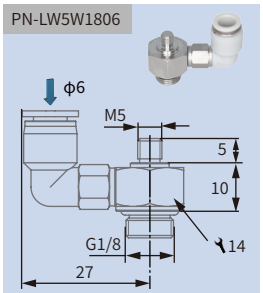

PN-LW18W1806

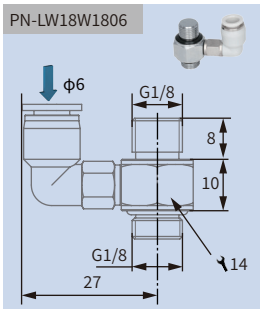

Installation and usage method

PN-CW5D11

B-20006[P]
(Optional)

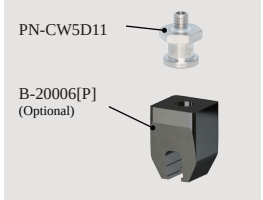

PN-CW5W5

B-3B14[H]/S
(Optional)

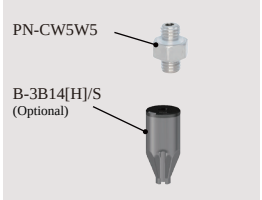

PN-LW5D1106

B-20006[P]
(Optional)

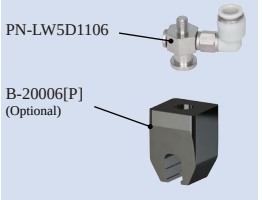

PN-LW5W506

B-3B14[H]/S
(Optional)

