WORKPIECE PALLET CONVEYOR

LOCATE UNIT
LIFT AND TRANSFER UNIT

LIFT AND ROTATE UNIT
CURVE UNIT

LIFTER
TRANSPORTATION CONTOL

Vitrans

VT CONVEYOR SYSTEM

4.0




Vitrans

01 Product catalogue

01	Product catalogue	P1
	Product overview	P2-7
02	Workpiece pallet	P8-14
03	Conveyor	P15-68
04	Locate unit	P69-83
05	Lift and transfer unit	P84-102
06	Lift and rotate unit	P103-111
07	Curve unit	P112-129
08	Lifter	P130-150
09	Transportation control	P151-183
10	Conveyor leg	P184-201
11	Conveyor system overview	P202-208

Pallet Conveyor System

Pallet conveyor system is designed for the transportation of workpiece pallets and it is a diverse modular system that meets a wide range of different products in economical production.

The conveyor system includes multiple conveyor types and modular mechanisms to meet different automatic production requirements.

Conveyor Type

Select the suitable conveyor type according to different product features, manufacturing processes, cycle time requirements and production line layout:

- Flat belt conveyor
- Timing belt conveyor
- Accumulated chain conveyor
- Plastic chain conveyor

Modular Mechanisms

Besides different types of conveyors, the conveyor system includes below modular mechanisms:

- Workpiece pallet
- Lift and locate unit
- Lift and transfer unit
- Lift and rotate unit
- Curve unit
- Lifter
- Stopper



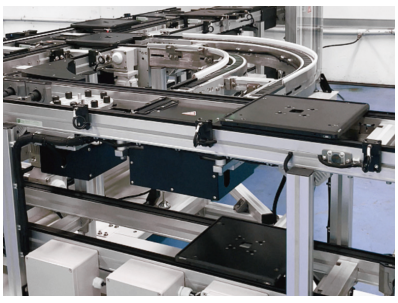



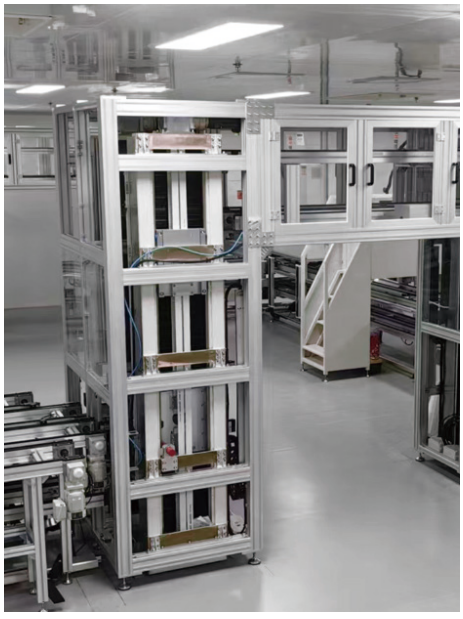

Operating Principle

After loading the workpiece to pallet, conveyor transports workpiece pallet from one station to another by means of friction. Stopper stops the workpiece pallet at manual work or automatic station while the conveyor medium continues moving. Several workpiece pallets can build up in front of individual stations to form small buffers. Once a processing stage is completed at the station, the workpiece pallet is released to travel on to the next work sttion. At the end of the assembly process the workpiece is removed from the workpiece pallet.

1-Workpiece pallet size and load

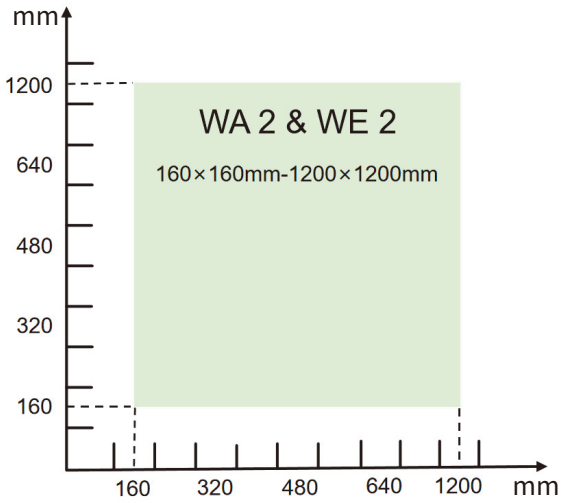

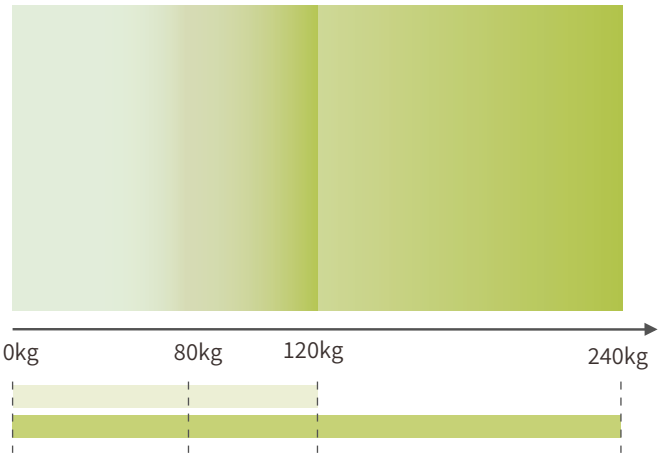

Workpiece pallet

The workpiece pallet transports the workpiece from one processing station to the next on the transfer system. Vitrans workpiece pallet is made of carry plate and frame modules. The carry plate thickness and frame module type is decided according to workpiece size and weight.

Permitted weights

The workpiece pallet total weight(pay load) results from the following:

- Workpiece pallet mass
- Workpiece pallet load(workpiece, fixture, etc.)
- Weight of the special accessories(RFID tag, etc.)

Stopper installation

Stopper can be Mounted in rear right position or in front left position in the direction of transport to stop workpiece pallet.

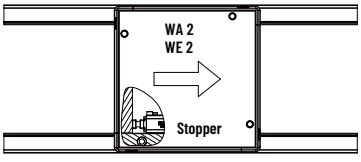

Front left position

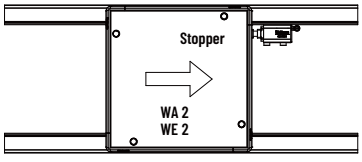

Rear right position

2-Layout design

Conveyor system layout is designed according to product type, cycle time requirements, plant size, work station quality and distribution.

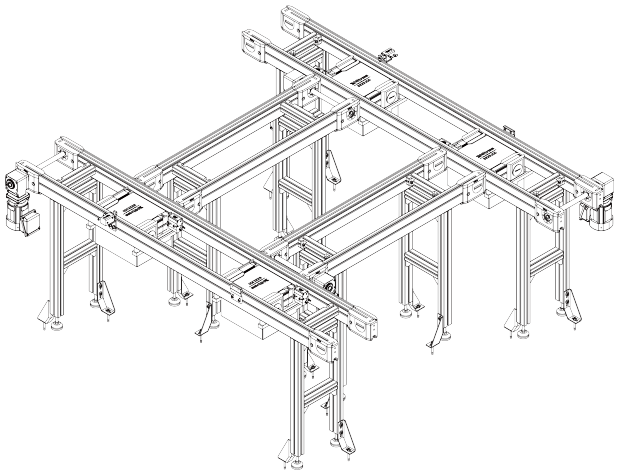

Horizontal circuit layout A

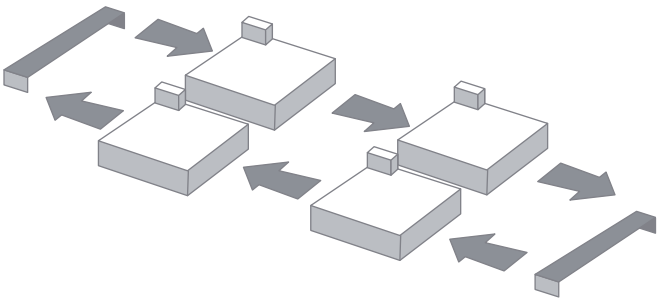

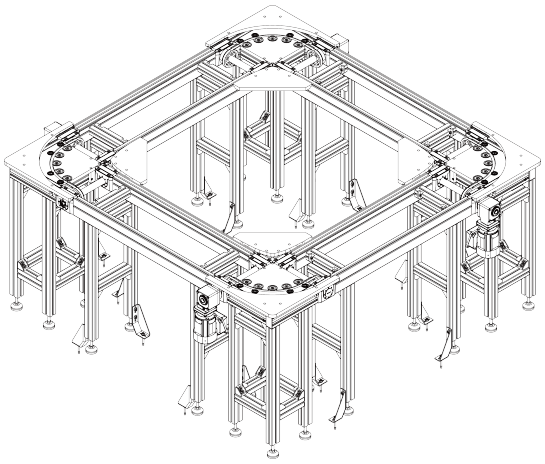

Horizontal circuit layout B

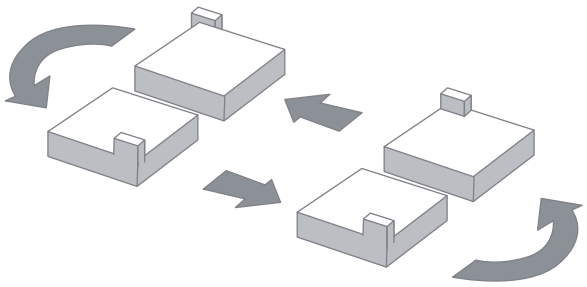

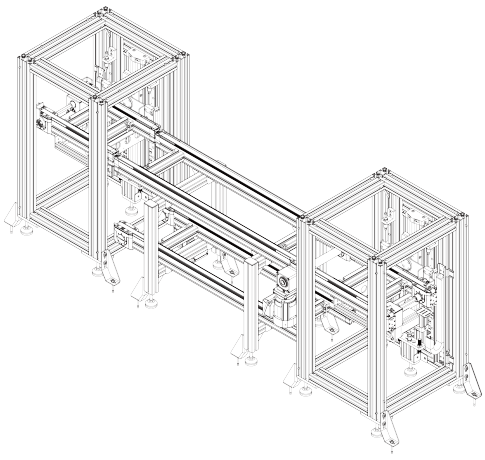

Vertical circuit layout

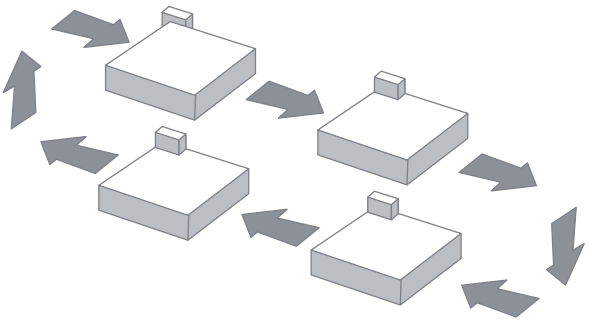

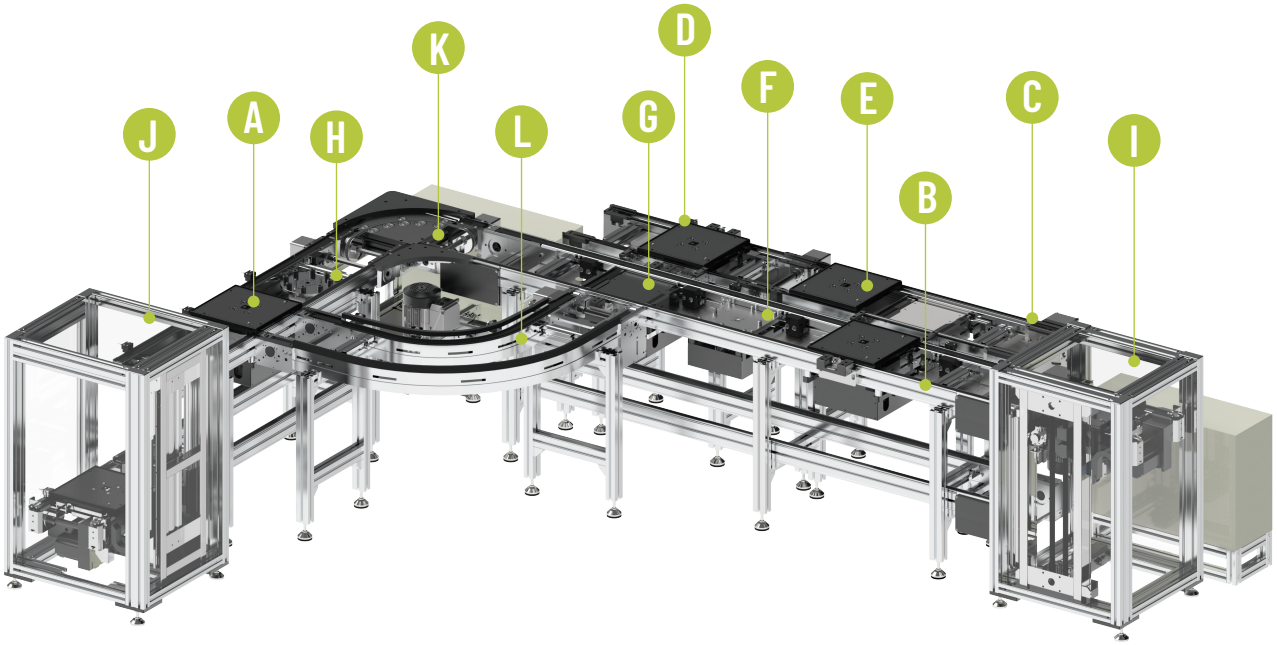

A BC2 Conveyor



B FC2 Conveyor

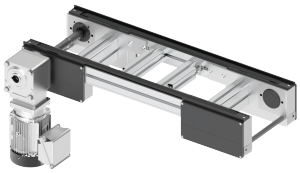

C AC2 Conveyor



D PC2 Conveyor

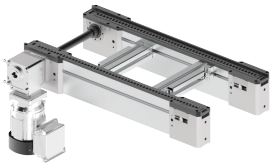

E Workpiece pallet

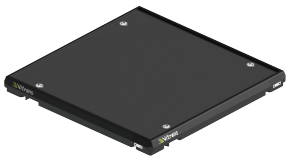

F Lift and locate unit

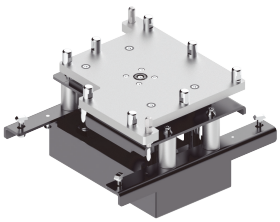

G Lift and transfer unit

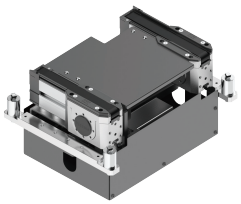

H Lift and rotate unit

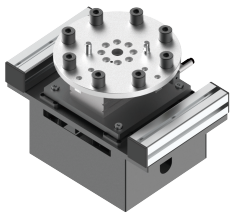

I Belt lifter

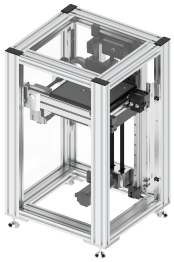

J Pneumatic lifter

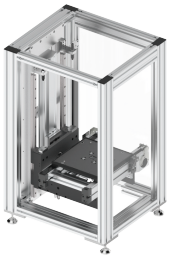

K KV/90 Curve unit

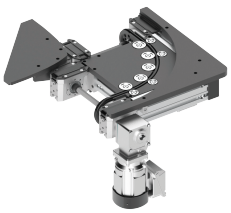

L KV/90 Curve unit

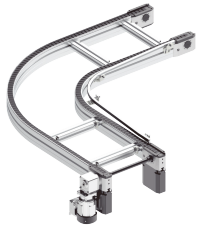

3-Conveyor medium

Workpiece pallet load is decided by below factors:

• Combination of conveyor medium, glide profiles, and workpiece pallet frame type.

• Contact length between workpiece pallet and conveyor medium.

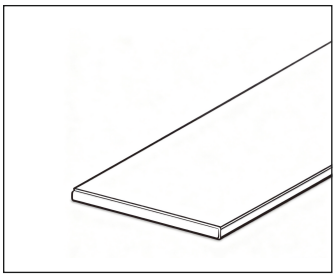

1. Flat belt

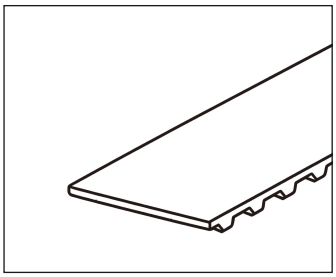

2. Timing belt

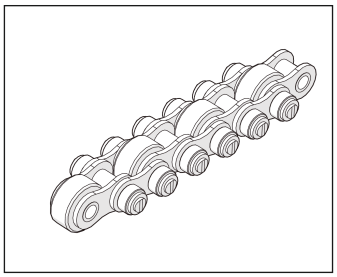

3. Accumulated chain

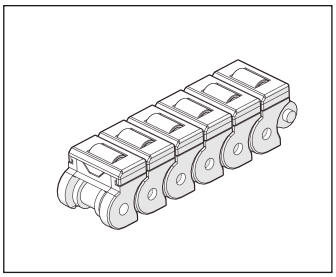

4. Plastic chain

Conveyor medium surface load			Maximum load of conveyor
Conveyor medium	Surface load	Applicable workpiece pallet type	
Flat belt	1 kg/cm	WA2	The total weight of the accumulated workpiece pallets must be less than the maximum load of conveyor, otherwise the conveyor should be designed as two or multiple conveyors.
Timing belt	1 kg/cm	WA2	
Accumulated chain	1.5 kg/cm(Plastic glide profile)	WE2	
	2 kg/cm(Steel glide profile)	WE2	
Plastic chain	0.5 kg/cm	WE2	

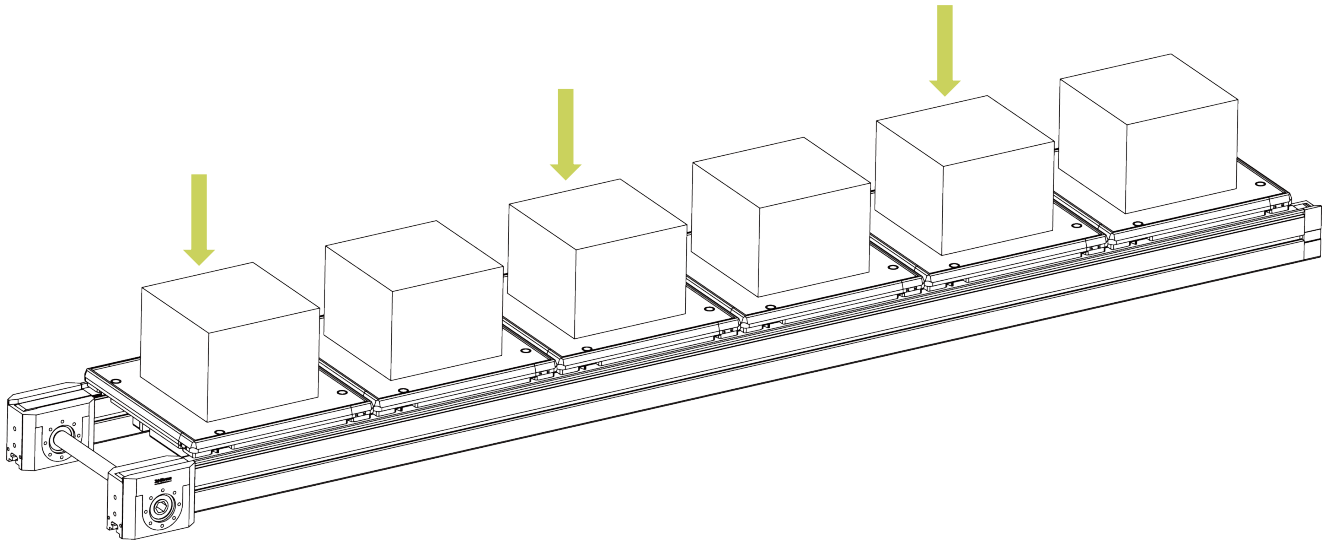

4- Ambient conditions







Climatic

The conveyor systems have been designed for stationary use in a location that is protected from the elements.

Operating temperature

+5 to +40°C

Higher than +40°C or lower than +5°C, less load

Storage temperature

0°C to +35°C

Relative humidity

5% to 85%, non-condensing

1% to 2%, dry room

Biological

Avoid molds, fungi, rodents, and other vermin.

Chemical

Do not set up near industrial systems with chemical emissions.

Physical

Do not set up near sources of shavings, sand or dust.

Do not set up in areas that are regularly jarred by highforces caused by, e.g., presses, heavy machinery, etc.

02

Workpiece pallet

The workpiece pallet is used in the conveyor system to convey the workpiece through the processing stations.

WA2——Workpiece pallet
WE2——Workpiece pallet

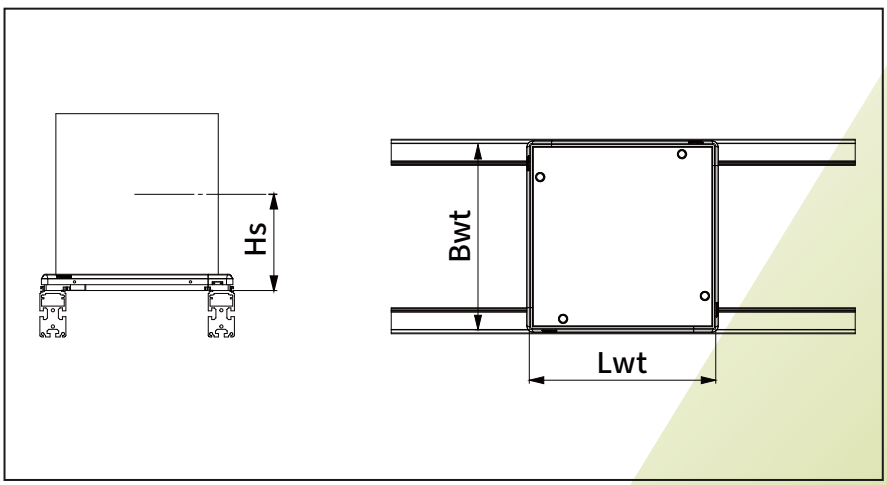

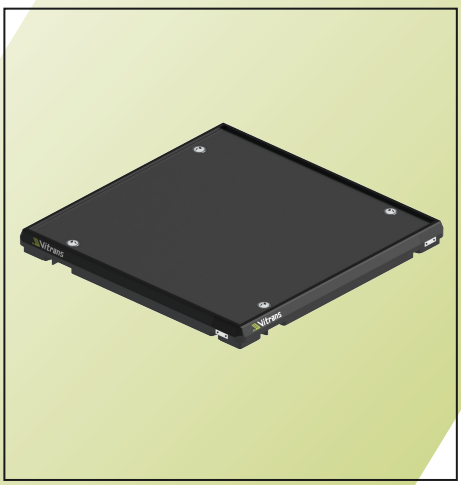

Workpiece pallet and conveyor medium:

WA2—Workpiece pallet, frame module with PA wear pad, suitable for flat belt, timing belt and flat top chain.

WE2—Workpiece pallet, frame module with PE wear pad, suitable for accumulated chain and plastic chain.

Advantages:

Modular frame design, it can combine with carry plate to construct different size of workpiece pallet.

Stopper can stop workpiece pallet at inner edge or outer edge.

Positioning bushings and guide groove can be used for precisely locating and roughly locate.

Bottom and side exciter plate can be used for proximity sensor detecting.

Reserve space for RFID tag installation inside of the frame module and top face of carrying plate.

Workpiece pallet selection:

Select frame module type according to conveyor medium.

Select carrying plate size and thickness according to workpiece size and weight.

Notice:

Workpiece pallet type must be suitable for conveyor medium.

• Flat belt, timing belt, flat top chain:
Recommend to use WA workpiece pallet with PA wear pad.
• Accumulated chain, plastic chain:
Recommend to use WE workpiece pallet with PE wear pad.

Workpiece pallet load(pay load) is decided by frame module type and the contact length between pallet and conveyor medium.

When stopping workpiece pallet or changing transfer direction, it is important to observe the position of the gravity center load on the workpiece pallet to ensure that the acceleration forces can be absorbed without any interferenes.

Generally we recommend that:
• The load should be positioned in the center of the workpiece pallet.
• The center of gravity should not exceed a height of 1/2 Bwt(with Bwt ≤ Lwt).

For workpiece pallets that are not square, please note that the permissible total weight may be different for longitudinal conveyors and transverse conveyors and the shorter side is the determining factor for the maximum load.

Workpiece pallet permissible total weight is decided by the combination of workpiece pallet frame module type, conveyor medium, glide profile type, and contact length between workpiece pallet and conveyor medium.

WA2 Workpiece pallet

The workpiece pallet is used in the conveyor system to convey the workpiece through the processing stations.

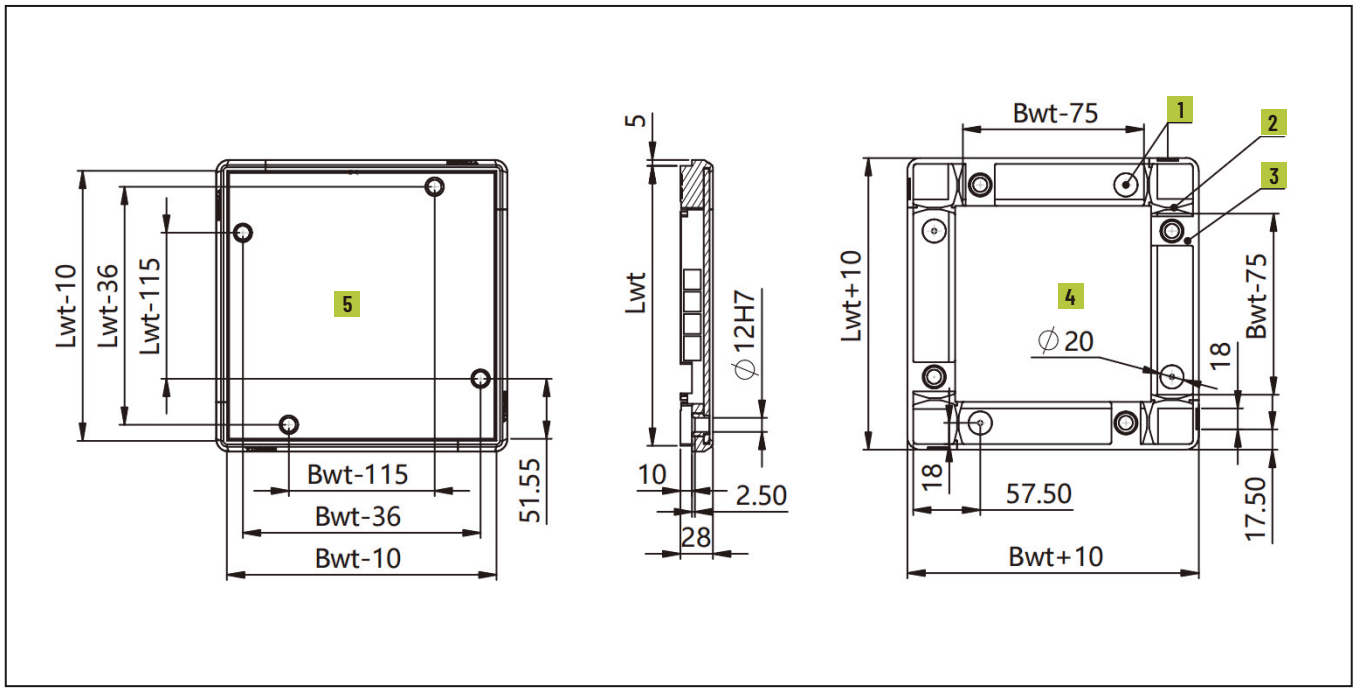

1. Exciter plate **2.** Guide groove **3.** Stopper aperture **4.** Top clearance **5.** Bottom clearance

Suitable for conveyor media:

Flat belt, timing belt, Flat top chain.

Positioning bushing supports ±0.05mm high precisely locating.

Guide groove supports ±0.5mm roughly locating.

Reserve space for RFID tag installation.

PA frame module, aluminum or steel carry plate

Aluminum carrying plate thickness:

5mm/8mm/12mm

42 standard specifications.

Maximum load is up to 120kg.

Exciter plates at the bottom and side of frame module for proximity sensor detecting.

Compliant with ESD.

Delivery notes

Scope of delivery:

Carrying plate 1) , Frame modules 2) , Positioning bushings

Condition on delivery:

Fully assembled or spare parts

1) Support customizing fixture mounting holes on carry plate.

2) For pallet size over 400mm×400mm, additional pins need to be added for reinforcement.

WA2 Workpiece pallet specification

Pallet width (Bwt)	Pallet length (Lwt)	Carrying plate thickness (mm)	Flatness (mm)	Carrying plate material	Carrying plate surface treatment	Carrying plate mass (Kg)
160	160	5	0.3	Aluminum	Black anodizing	0.32
160	240	5	0.3			0.48
160	320	5	0.3			0.65
240	240	5	0.3			0.74
240	320	5	0.5			0.99
240	400	5	0.5			1.24
320	320	5	0.5			1.33
320	400	5	0.5			1.67
400	400	5	0.6			2.10
240	320	8	0.5			1.55
240	400	8	0.5			1.95
320	320	8	0.5			2.06
320	400	8	0.5			2.63
320	480	8	0.5			3.16
400	400	8	0.6			3.31
400	480	8	0.6			3.96
400	640	8	0.8			5.33
480	480	8	0.8			4.79
480	640	8	0.8			6.42
480	800	8	1			8.05
640	640	8	0.8			8.61
640	800	8	1			10.79
800	800	8	1			13.53
320	480	12	0.5			4.71
400	400	12	0.5			4.92
400	480	12	0.6			5.93
400	640	12	0.8			7.95
480	480	12	0.6			7.14
480	640	12	0.8			9.58
480	800	12	0.8			12.01
640	640	12	1			12.85
640	800	12	1			16.12
800	800	12	1			20.22
640	1040	12	1.2			21.28
800	1040	12	1.2			26.64
800	1200	12	1.4			30.76
1040	1040	12	1.2			34.69
1040	1200	12	1.4			40.05
1200	1200	12	1.4			46.25

Note: Surface treatment of steel carrying is black electrophoretic.

WE2 Workpiece pallet

The workpiece pallet is used in the conveyor system to convey the workpiece through the processing stations.

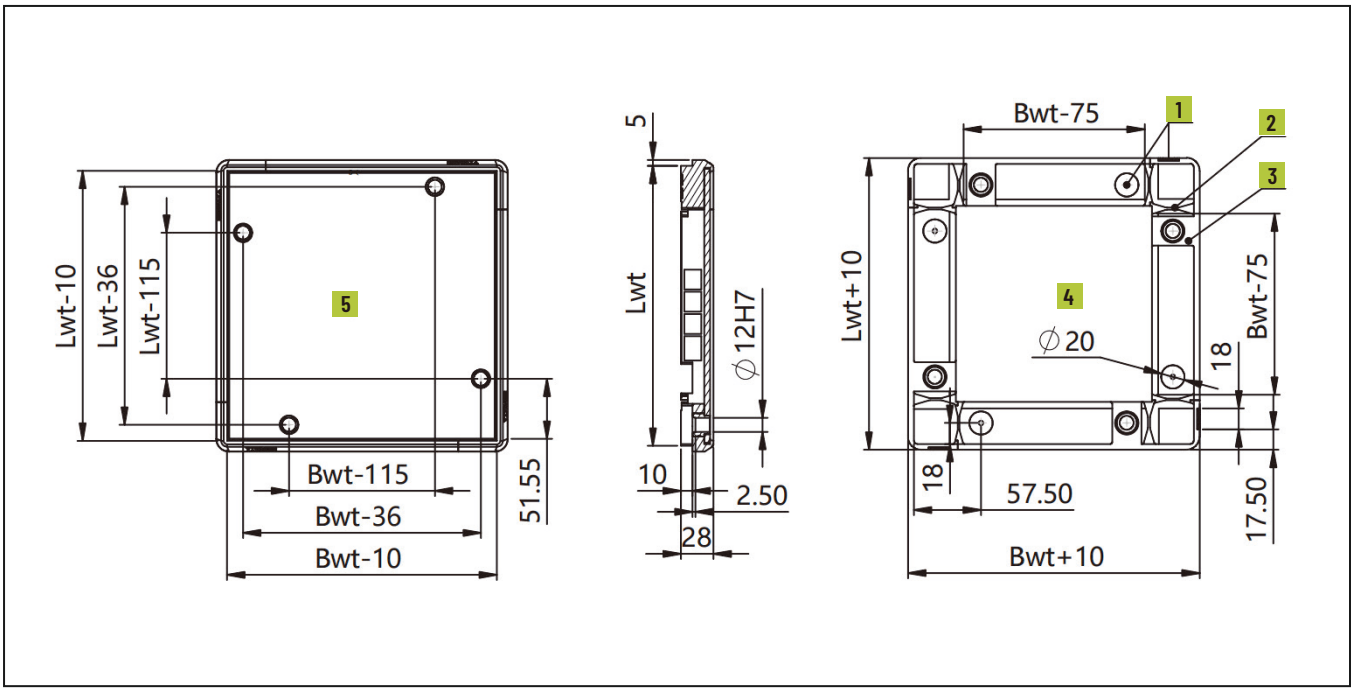

1. Exciter plate **2.** Guide groove **3.** Stopper aperture **4.** Top clearance **5.** Bottom clearance

Suitable for conveyor media:

accumulated chain, plastic chain.

Positioning bushing supports ±0.05mm high precisely locating.

Guide groove supports ±0.5mm roughly locating.

Reserve space for RFID tag installation.

PE frame module, aluminum or steel carry plate

Aluminum carrying plate thickness:

5mm/8mm/12mm

42 standard specifications.

Maximum load is up to 240kg.

Exciter plates at the bottom and side of frame module for proximity sensor detecting.

Compliant with ESD.

Delivery notes

Scope of delivery:

Carrying plate 1) , Frame modules 2) , Positioning bushings

Condition on delivery:

Fully assembled or spare parts

1) Support customizing fixture mounting holes on carry plate.

2) For pallet size over 400mm×400mm, additional pins need to be added for reinforcement.

WE2 Workpiece pallet specification

Pallet width (Bwt)	Pallet length (Lwt)	Carrying plate thickness (mm)	Flatness (mm)	Carrying plate material	Carrying plate surface treatment	Carrying plate mass (Kg)
160	160	5	0.3	Aluminum	Black anodizing	0.32
160	240	5	0.3			0.48
160	320	5	0.3			0.65
240	240	5	0.3			0.74
240	320	5	0.5			0.99
240	400	5	0.5			1.24
320	320	5	0.5			1.33
320	400	5	0.5			1.67
400	400	5	0.6			2.10
240	320	8	0.5			1.55
240	400	8	0.5			1.95
320	320	8	0.5			2.06
320	400	8	0.5			2.63
320	480	8	0.5			3.16
400	400	8	0.6			3.31
400	480	8	0.6			3.96
400	640	8	0.8			5.33
480	480	8	0.8			4.79
480	640	8	0.8			6.42
480	800	8	1			8.05
640	640	8	0.8			8.61
640	800	8	1			10.79
800	800	8	1			13.53
320	480	12	0.5			4.71
400	400	12	0.5			4.92
400	480	12	0.6			5.93
400	640	12	0.8			7.95
480	480	12	0.6			7.14
480	640	12	0.8			9.58
480	800	12	0.8			12.01
640	640	12	1			12.85
640	800	12	1			16.12
800	800	12	1			20.22
640	1040	12	1.2			21.28
800	1040	12	1.2			26.64
800	1200	12	1.4			30.76
1040	1040	12	1.2			34.69
1040	1200	12	1.4			40.05
1200	1200	12	1.4			46.25

Note: Surface treatment of steel carrying is black electrophoretic.

Ordering information

WA2	**Workpiece pallet type:** WA2 WE2
B ▢	**Workpiece pallet width:** 160 / 240 / 320 / 400 / 480 / 560 / 640 / 800 / 1040 / 1200
L ▢	**Workpiece pallet length:** 160 / 240 / 320 / 400 / 480 / 560 / 640 / 800 / 1040 / 1200
T ▢	**Carrying plate thickness:** T5 / T8 / T12
▢	**Carrying plate material:** AL(aluminum) (default) / CS(carbon steel) / N(without carrying plate)
SP	**Special requirements:** a.Special stress requirement b.Special positioning c.Special surface treatment d.Special carrying plate material

Ordering example

WA2—B320—L320—T8—AL

Workpiece pallet type: WA2 **Workpiece pallet width:** Bwt=320 **Workpiece pallet length:** Lwt=320 **Carrying plate thickness:** 8mm

Carrying plate material: AL(aluminum) **Special requirements:** None

03

Conveyor

Convey workpiece pallet to work stations.

BC2——Timing belt conveyor

BC2/M——Timing belt conveyor

FC2——Flat belt conveyor

FC2/R——Roller track

AC2——Accumulated chain conveyor

AC2U——Accumulated chain conveyor

AC2L——Accumulated chain conveyor

AC2/H——Accumulated chain conveyor

PC2——Plastic chain conveyor

TG2/H——Lift gate

AC2/R——Connection belt

RH3——Automatic lubricate unit

Conveyor type

BC2 Conveyor

BC2/M Conveyor

Conveyor medium: Timing belt
Permitted maximum load: 60kg
Permitted maximum surface load: 1kg/cm;

FC2 Conveyor

Conveyor medium: Flat belt
Permitted maximum load: 250kg
Permitted maximum surface load: 1kg/cm;

AC2 Conveyor

Conveyor medium: Accumulated chain
Permitted maximum load: 300kg;

AC2U Conveyor

Conveyor medium: Accumulated chain
Permitted maximum load: 300kg;

AC2L Conveyor

Conveyor medium: Accumulated chain
Permitted maximum load: 700kg;

AC2/H Conveyor

Conveyor medium: Accumulated chain
Permitted maximum load: 2200kg;

Permitted maximum surface load of
AC2 series conveyor:
1.5kg/cm(with plastic glide profile)
2kg/cm(with steel glide profile);

PC2 Conveyor

Conveyor medium: Plastic chain
Permitted maximum load: 150kg;

Permitted maximum surface load: 0.5kg/cm.

Advantages:

Modular and standardized design, easy for installation and maintaining.

Conveyor media including timing belt, flat belt, accumulated chain and plastic chain. Permitted maximum load of workpiece pallet is up to 240kg.

Accumulation is allowed. Diversified production layout can be set up with conveyors, curve unit, lifter and other modular mechanisms.

Suitable for new energy, automotive part, electronics, motor and other industries.

Selection guidelines:

1. Timing belt conveyor: Suitable for light workpiece conveying at short distance within 6 meters under dry and clean environment. Reverse operating is allowed.

2. Flat belt conveyor: Suitable for light workpiece conveying at long distance within 15 meters under dry and clean environment.

3. Plastic chain conveyor: Suitable for light workpiece conveying at short distance within 8 meters under high cleanliness requirement. Plastic chain can reduce dust and grease stain.

4. Accumulated chain conveyor: Suitable for medium workpiece conveying at long distance within 15 meters under relatively poor environment. Reverse operating is allowed while conveyor length is less than 2 meters.

5. Workpiece pallets total weight must be less than conveyor permitted maximum load. Actual surface load must be less than conveyor permitted maximum surface load.

6. Different conveyor types can be used in the same conveyor system.

BC2 Timing belt conveyor

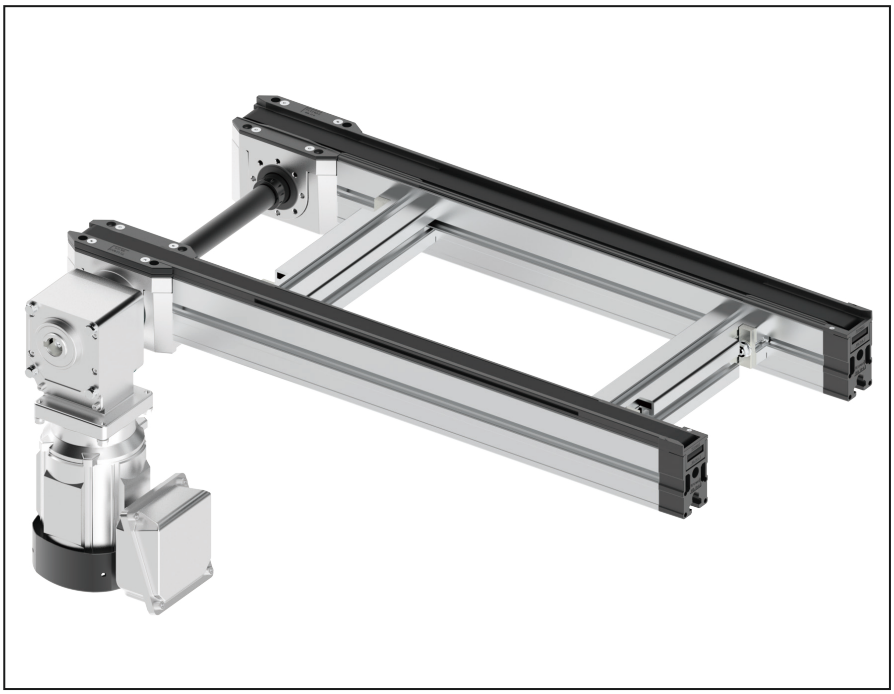

Delivery notes

Scope of delivery:

Conveyor

Motor(with terminal box)

Condition on delivery:

Fully assembled

Recommended accessories:

Connection kit

Conveyor leg(with foundation bracket and bolts)

- Conveyor medium: Timing belt
- Motor: Three phase motor[1],
  Motor mounting location and angle has multiple options(Refer to below diagram)
- Maximum length: 6 meters
- Accumulation operation possible
- Reversible operation possible
- Compliant with ESD
- Support customization

1 Support other motor type

BC2 - Dimensions

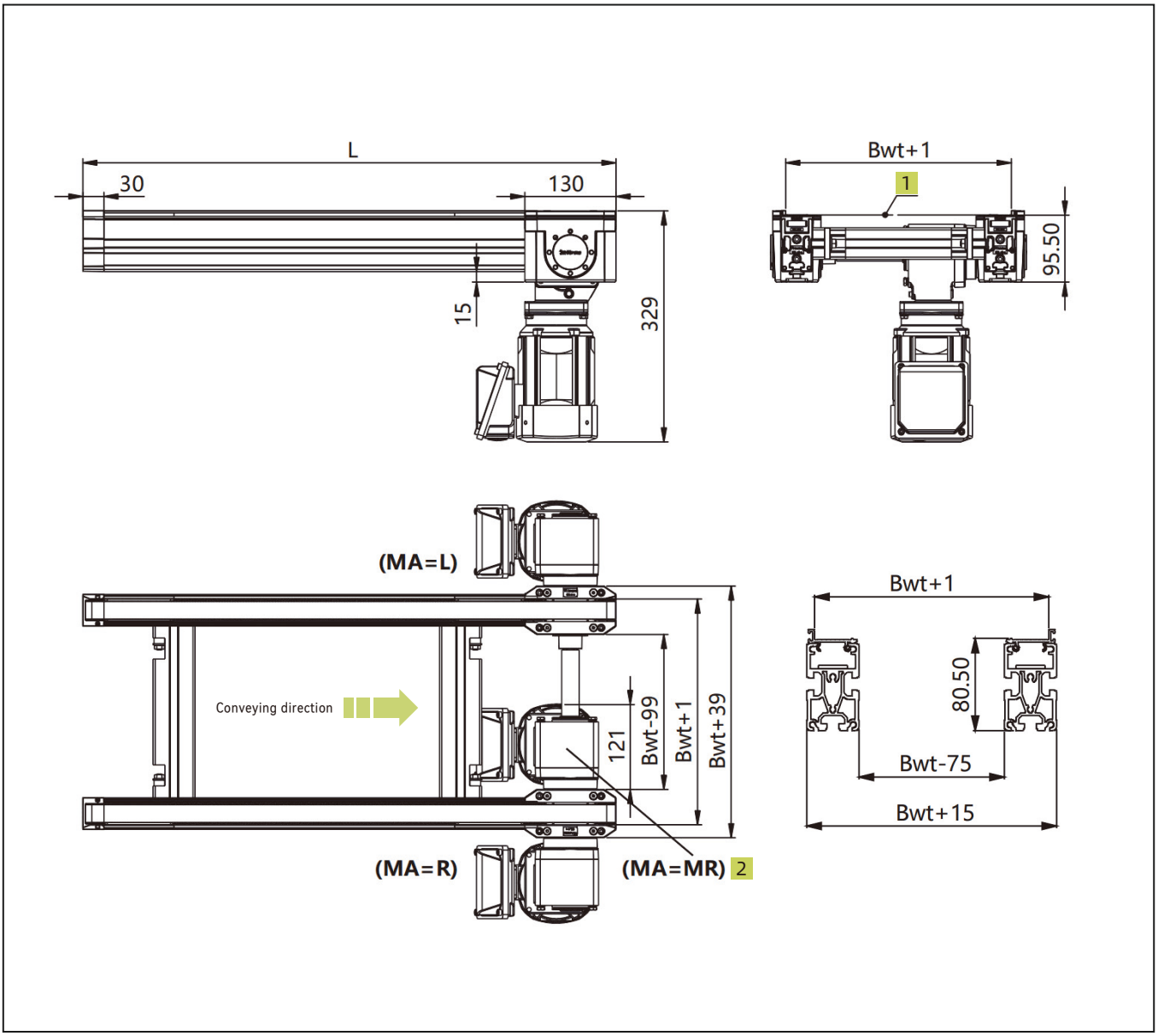

1. Conveyor medium top face

2. For MA=M, please confirm with Vitrans first.

Technical data

Conveyor medium*		Timing belt
Workpiece pallet width(mm)*	Bwt	160,240,320,400,480,560,640,800,1040,1200
Conveyor length(mm)*	L	300≤L≤6000
Rated speed(m/min)*	V	0,6,9,12,15,18
Permitted maximum load(kg)*		60
Permitted maximum surface load(kg/cm)*		1
Motor type*		Three phase motor
Motor mounting location*	MA	L(left), R(Right), ML(Middle-Left), MR(middle-Right)
Motor mounting angle*		0°，90°，180°，270°
Working voltage*	U	220/380AC
Working frequency*	f	50Hz
Motor connection*	AT	Terminal box

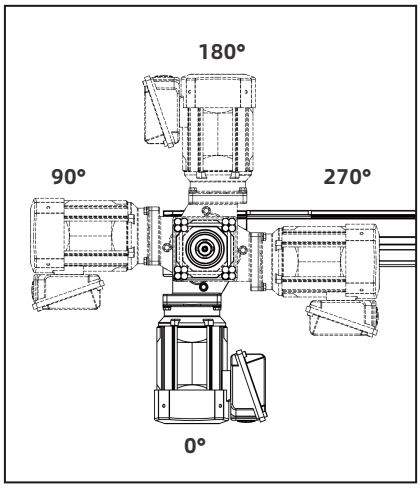

▲ Motor mounting location diagram

Workpiece pallet width	Support customizatio
Rated speed	V=0 means no motor. Support customizing other speed.
Motor mounting location	MA=M requires conveyor Bwt≥240mm.
Working voltage	Support customizing other working voltage.
Working frequency	**a.**Support customizing other working frequency. **b.**VFD can be used for speed adjusting.
Motor connection	Default terminal box direction is shown in the figure. For other request, please contact us.

Ordering information

BC2	**Conveyor type:** BC2
B ▢	**Workpiece pallet width:** 160 / 240 / 320 / 400 / 480 / 560 / 640 / 800 / 1040 / 1200
L ▢	**Conveyor length:** 300≤L≤6000
V ▢	**Rated speed:** 0 1) / 6 / 9 / 12 / 15 / 18 / customized
▢	**Motor mounting location:** L(left), R(Right), ML(Middle-Left), MR(middle-Right)
A ▢	**Motor mounting angle:** 0 / 90 / 180 / 270
▢	**Motor type:** ZY02(Default brand)
SP	**Special requirements:** a.Working voltage b.Working frequency c.Terminal box direction d.Motor connection e.Motor mounting location 1) V=0 means no motor

Ordering example

BC2—B320—L2000—V12—ML—A0—ZY02

Conveyor type: BC2	**Workpiece pallet width:** Bwt=320	**Conveyor length:** L=2000	**Rated speed:** 12m/min
Motor mounting location: ML(Middle-Left)	**Motor mounting angle:** 0°	**Motor type:** ZY02	**Special requirements:** None

BC2/M Timing belt conveyor

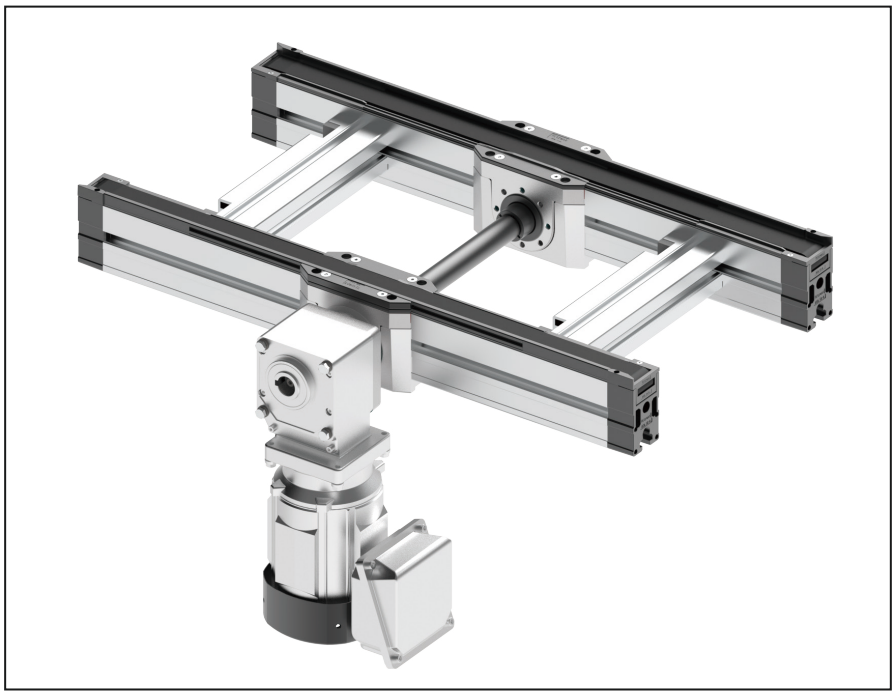

- Conveyor medium: Timing belt
- Motor: Three phase motor[1],
  Motor mounting location and angle has multiple options(Refer to below diagram)
- Accumulation operation possible
- Reversible operation possible
- Compliant with ESD
- Support customization

1 Support other motor type

Delivery notes

Scope of delivery:

Conveyor

Motor(with terminal box)

Condition on delivery:

Fully assembled

Recommended accessories:

Connection kit

Conveyor leg(with foundation bracket and bolts)

BC2/M - Dimensions

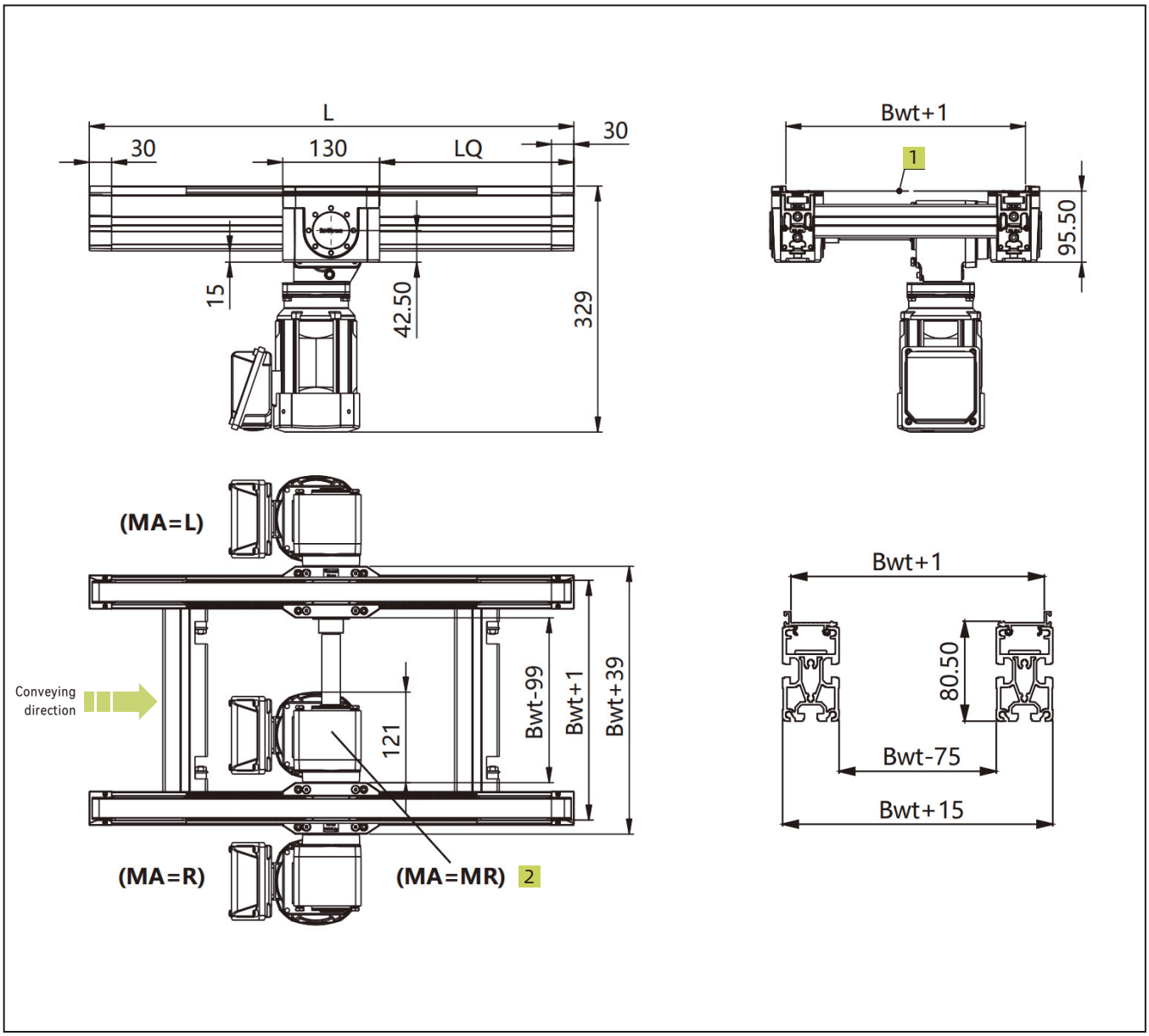

1. Conveyor medium top face
2. For MA=M, please confirm with Vitrans first.

Technical data

Conveyor medium*		Timing belt
Workpiece pallet width(mm)*	Bwt	160,240,320,400,480,560,640,800,1040,1200
Conveyor length(mm)*	L	300≤L≤6000
Extend length(mm)	LQ	100≤L≤5700
Rated speed(m/min)*	V	0,6,9,12,15,18
Permitted maximum load(kg)*		60
Permitted maximum surface load(kg/cm)*		1
Motor type*		Three phase motor
Motor mounting location*	MA	L(left), R(Right), ML(Middle-Left), MR(middle-Right)
Motor mounting angle*		0°,90°,180°,270°
Working voltage*	U	220/380AC
Working frequency*	f	50Hz
Motor connection*	AT	Terminal box

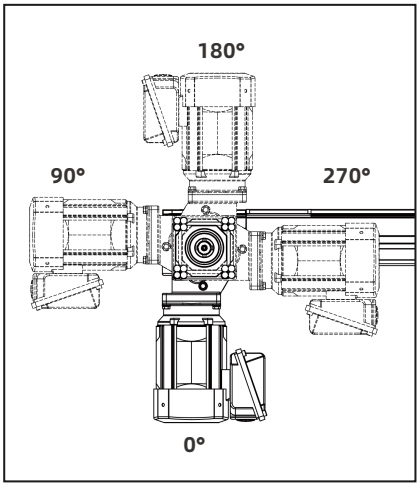

▲ Motor mounting location diagram

Workpiece pallet width	Support customization
Rated speed	V=0 means no motor. Support customizing other speed.
Motor mounting location	MA=M requires conveyor Bwt≥240mm.
Working voltage	Support customizing other working voltage.
Working frequency	**a.**Support customizing other working frequency. **b.**VFD can be used for speed adjusting.
Motor connection	Default terminal box direction is shown in the figure. For other request, please contact us.

Ordering information

BC2/M	**Conveyor type:** BC2/M
B ▢	**Workpiece pallet width:** 160 / 240 / 320 / 400 / 480 / 560 / 640 / 800 / 1040 / 1200
L ▢	**Conveyor length:** 300≤L≤6000
LQ ▢	**Conveyor length:** 100≤L≤5700
V ▢	**Rated speed:** 0 1) / 6 / 9 / 12 / 15 / 18 / customized
▢	**Motor mounting location:** L(left), R(Right), ML(Middle-Left), MR(middle-Right)
A ▢	**Motor mounting angle:** 0 / 90 / 180 / 270
▢	**Motor type:** ZY02(Default brand)
SP	**Special requirements:** a.Working voltage b.Working frequency c.Terminal box direction d.Motor connection e. Motor mounting location 1) V=0 means no motor

Ordering example

BC2/M—B320—L2000—LQ1000—V12—L—A0—ZY02

Conveyor type: BC2/M	**Workpiece pallet width:** Bwt=320	**Conveyor length:** L=2000	**Conveyor length:** LQ=1000
Rated speed: 12m/min	**Motor mounting location:** L(left)	**Motor mounting angle:** 0°	**Motor type:** ZY02
Special requirements: None			

BC2 Conveyor section dimensions

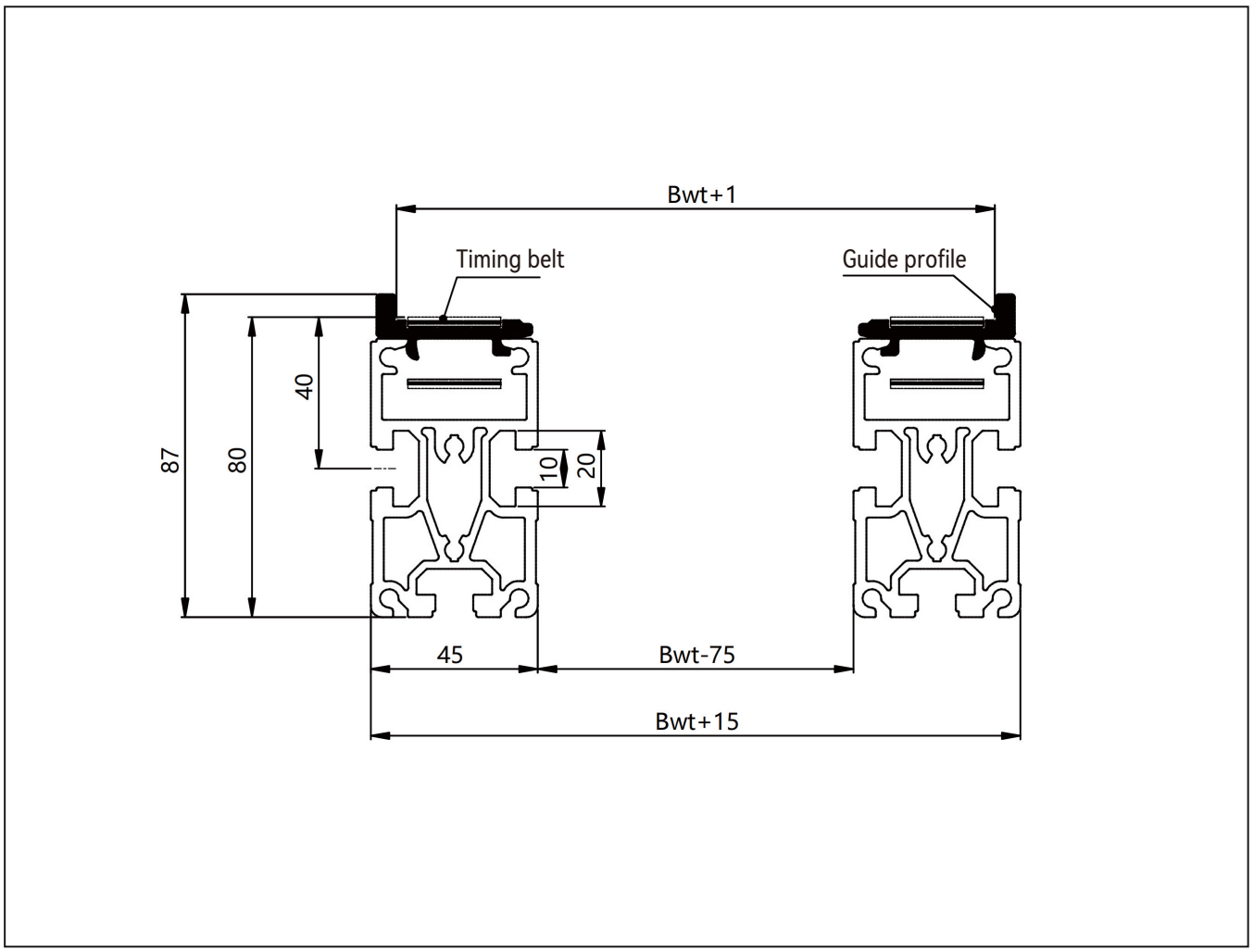

FC2 Flat belt conveyor

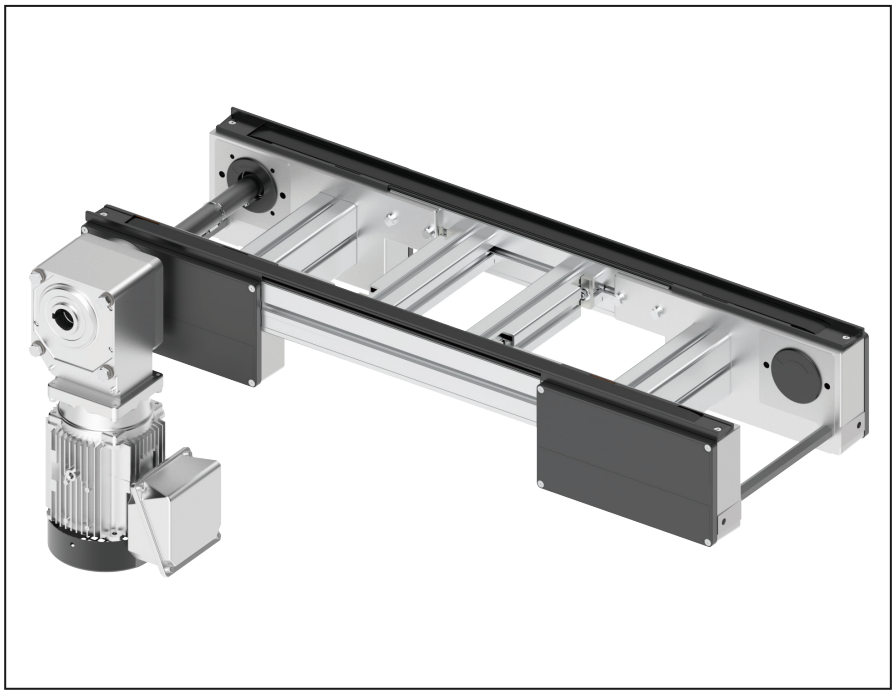

Delivery notes

Scope of delivery:

Conveyor

Motor(with terminal box)

Condition on delivery:

Fully assembled

Recommended accessories:

Connection kit

Conveyor leg(with foundation bracket and bolts)

Flat belt installation tool

- Conveyor medium: Flat belt
- Motor: Three phase motor[1],
  Motor mounting location and angle has multiple options(Refer to below diagram)
- Accumulation operation possible
- Reversible operation not possible
- Compliant with ESD
- Support customization

1 Support other motor type

FC2 - Dimensions

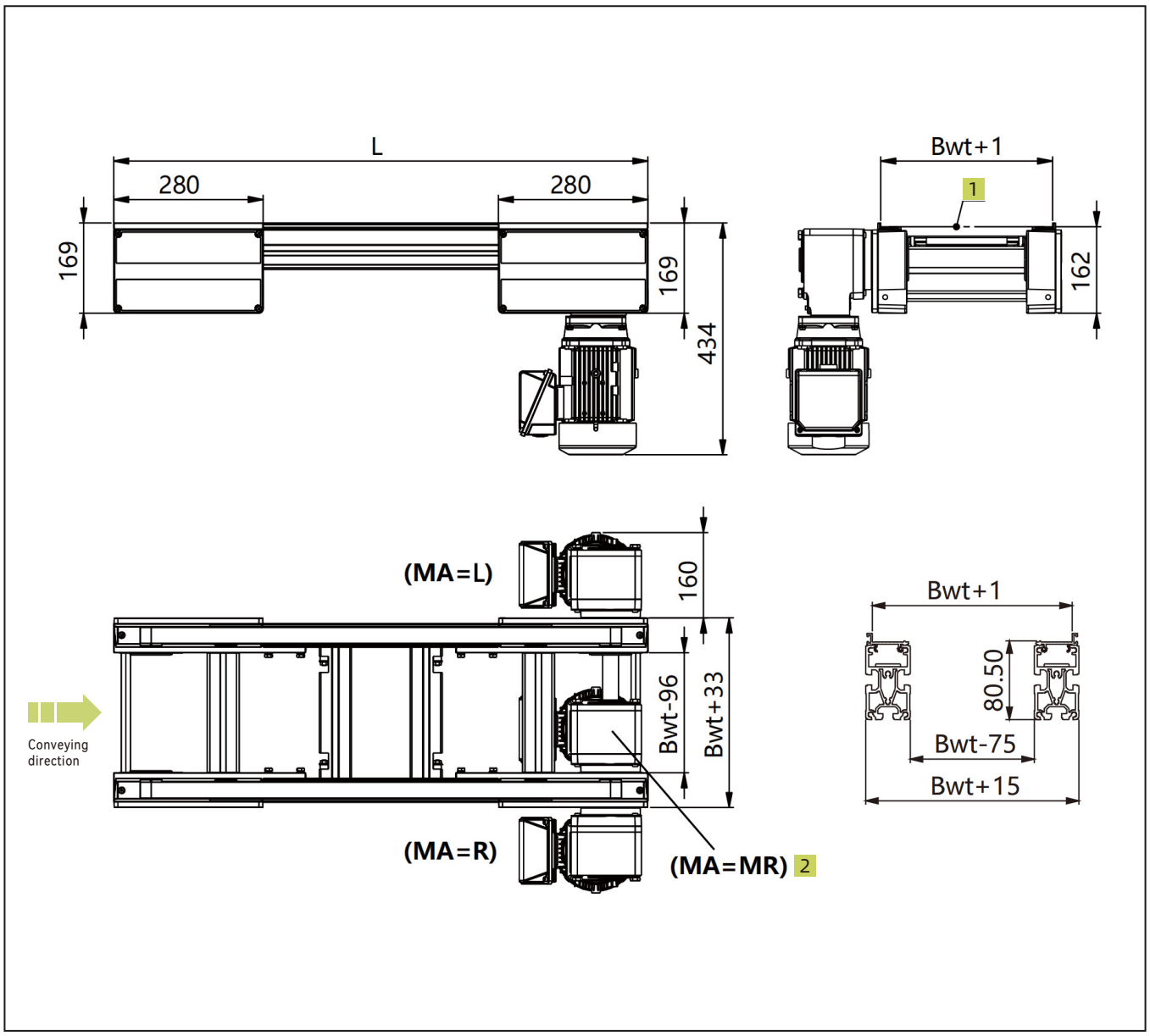

1. Conveyor medium top face

2. For MA=M, please confirm with Vitrans first.

Technical data

Conveyor medium**		Flat belt
Workpiece pallet width(mm)*	Bwt	160,240,320,400,480,560,640,800,1040,1200
Conveyor length(mm)*	L	2000≤L≤15000
Rated speed(m/min)*	V	0,6,9,12,15,18
Permitted maximum load(kg)*		250
Permitted maximum surface load(kg/cm)*		1
Motor type*		Three phase motor
Motor mounting location*	MA	L(left), R(Right), ML(Middle-Left), MR(middle-Right)
Motor mounting angle*		0°,90°,180°,270°
Working voltage*	U	220/380AC
Working frequency*	f	50Hz
Motor connection*	AT	Terminal box

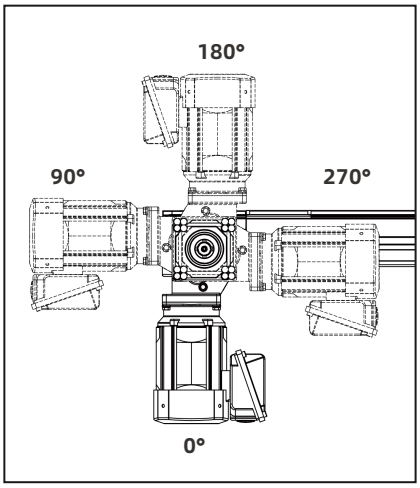

▲ Motor mounting location diagram

Workpiece pallet width	Support customization
Rated speed	V=0 means no motor. Support customizing other speed.
Motor mounting location	MA=M requires conveyor Bwt≥240mm.
Working voltage	Support customizing other working voltage.
Working frequency	**a.**Support customizing other working frequency. **b.**VFD can be used for speed adjusting.
Motor connection	Default terminal box direction is shown in the figure. For other request, please contact us.

Ordering information

FC2	**Conveyor type:** FC2
B ▢	**Workpiece pallet width:** 160 / 240 / 320 / 400 / 480 / 560 / 640 / 800 / 1040 / 1200
L ▢	**Conveyor length:** 2000≤L≤15000
V ▢	**Rated speed:** 0 1) / 6 / 9 / 12 / 15 / 18 / customized
▢	**Motor mounting location:** L(left), R(Right), ML(Middle-Left), MR(middle-Right)
A ▢	**Motor mounting angle:** 0 / 90 / 180 / 270
▢	**Motor type:** ZY075(Default brand)
SP	**Special requirements:** a.Working voltage b.Working frequency c.Terminal box direction d.Motor connection e.Motor mounting location 1) V=0 means no motor

Ordering example

FC2—B320—L3000—V12—L—A0—ZY075

Conveyor type: FC2	**Workpiece pallet width:** Bwt=320	**Conveyor length:** L=3000	**Rated speed:** 12m/min
Motor mounting location: L(left)	**Motor mounting angle:** 0°	**Motor type:** ZY075	**Special requirements:** None

FC2 Conveyor section dimensions

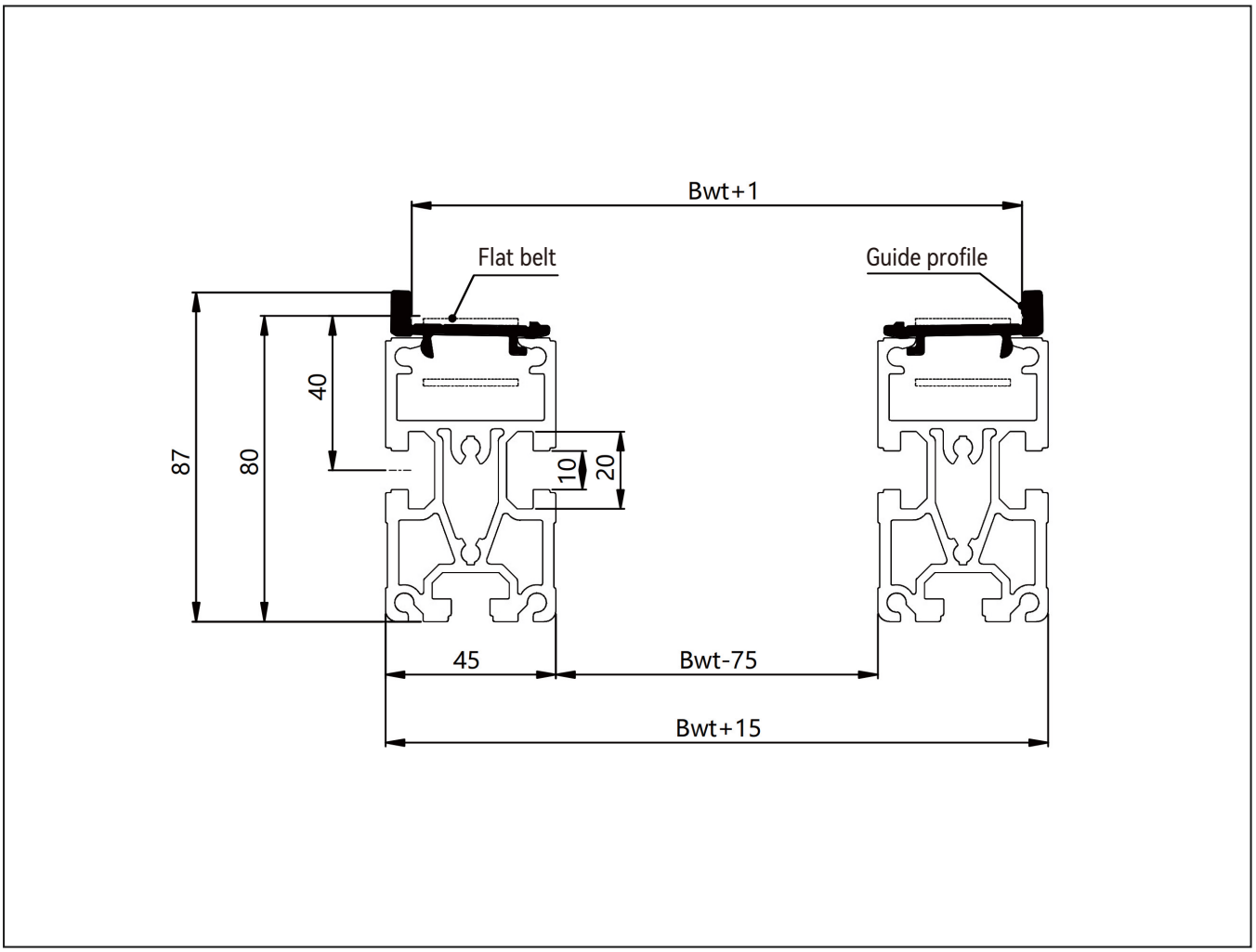

FC2/R Roller track

Additional workpiece pallet support on the transition between drive unit and return unit while workpiece pallet length Lwt< 320 mm.

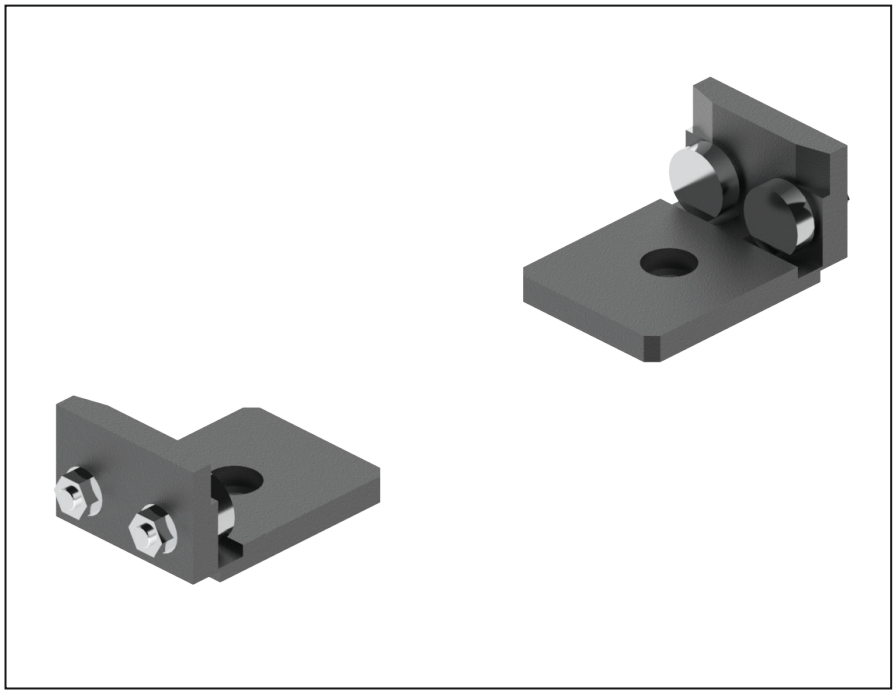

Delivery notes

Scope of delivery:
Roller track(1 pair)

Condition on delivery:
Fully assembled

- Conveying medium: Free roller
- Unpowered
- Suitable for WA2 and WE2 workpiece pallet
- Special unit for the connection of FC2 conveyor
- Used in pairs

FC2/R - Dimensions

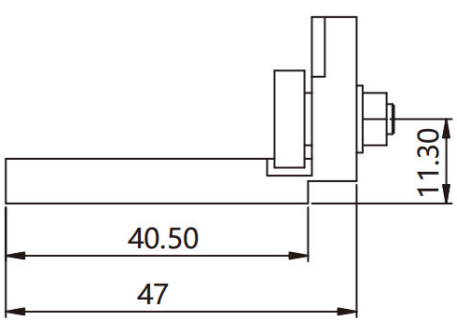

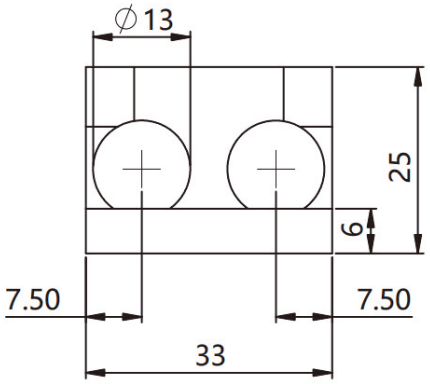

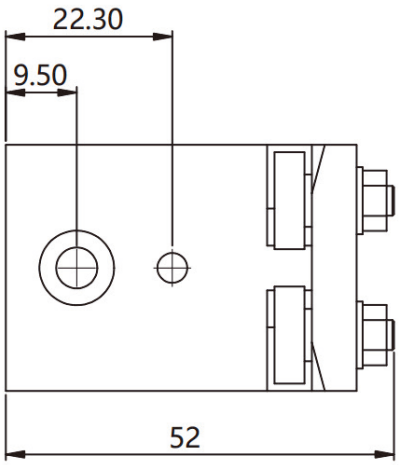

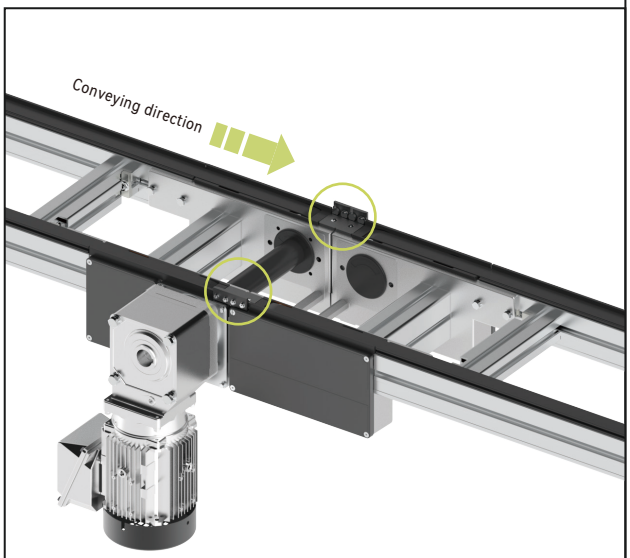

Application case

Product description	Roller track
Model	FC2/R.01.01

AC2 Accumulated chain conveyor

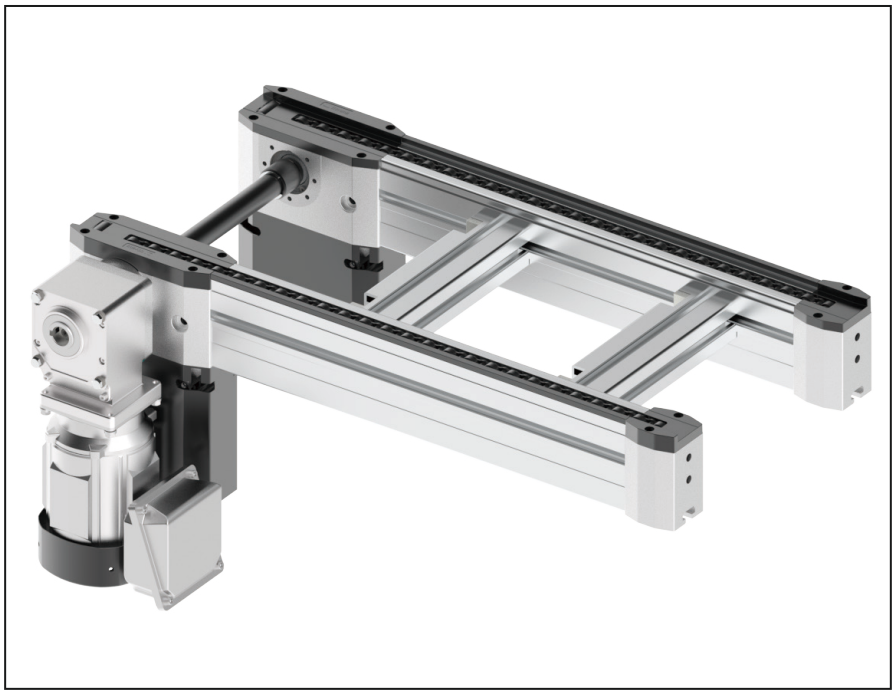

Delivery notes

Scope of delivery:

Conveyor

Motor(with terminal box)

Condition on delivery:

Fully assembled

Recommended accessories:

Connection kit

Conveyor leg(with foundation bracket and bolts)

Automatic lubricate unit

Chain installation tool

- Conveyor medium: Accumulated chain
- Motor: Three phase motor[1],
  Motor mounting location and angle has multiple options(Refer to below diagram)
- Accumulated chain with cover(to avoid small parts fall into chain gap) for option
- Reversible operation possible for conveyor length less than 2000 mm and accumulated chain without cover
- Accumulation operation possible
- Compliant with ESD
- Support customization

1 Support other motor type

AC2 - Dimensions

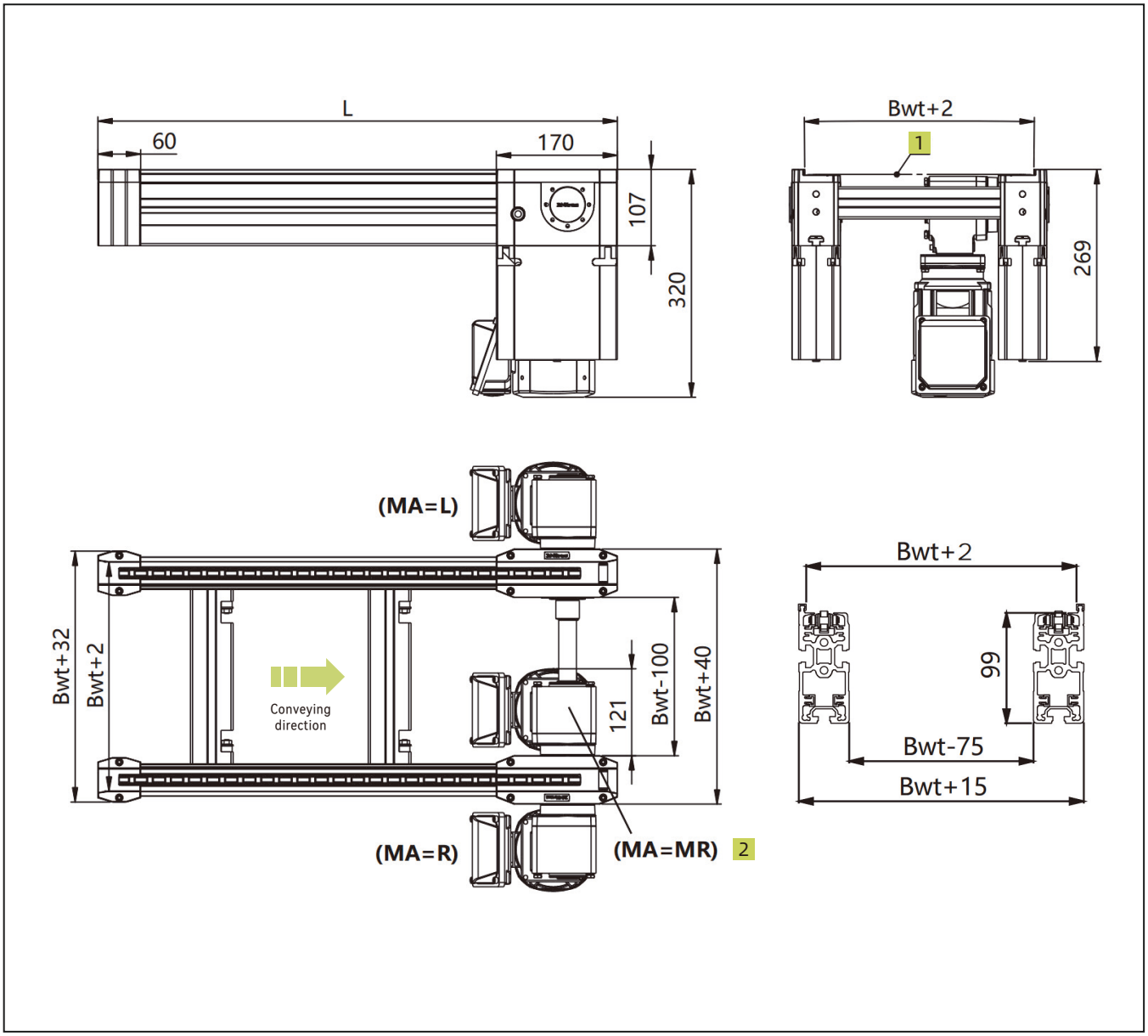

1. Conveyor medium top face
2. For MA=M, please confirm with Vitrans first.

Technical data

Conveyor medium*		Steel accumulated chain(Default), plastic accumulated chain, Steel accumulated chain with cover, plastic accumulated chain with cover
Workpiece pallet width(mm)*	Bwt	160,240,320,400,480,560,640,800,1040,1200
Conveyor length(mm)*	L	300≤L≤6000 (Reversible operation possible for conveyor length ≤2000 mm and accumulated chain without cover)
Rated speed(m/min)*	V	0,6,9,12,15,18
Permitted maximum load(kg)*		300
Permitted maximum surface load*		1.5kg/cm (with plastic glide profile), 2.0kg/cm(with steel glide profile)
Motor type*		Three phase motor
Motor mounting location*	MA	L(left), R(Right), ML(Middle-Left), MR(middle-Right)
Motor mounting angle*		0°,90°,180°,270°
Working voltage*	U	220/380AC
Working frequency*	f	50Hz
Motor connection*	AT	Terminal box

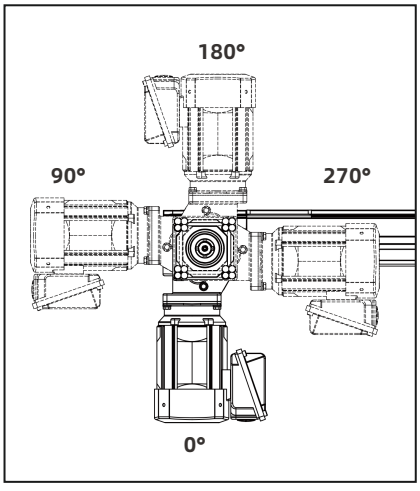

▲ Motor mounting location diagram

Workpiece pallet width	Support customization
Rated speed	V=0 means no motor. Support customizing other speed.
Motor mounting location	MA=M requires conveyor Bwt≥240mm.
Working voltage	Support customizing other working voltage.
Working frequency	**a.**Support customizing other working frequency. **b.**VFD can be used for speed adjusting.
Motor connection	Default terminal box direction is shown in the figure. For other request, please contact us.

Ordering information

AC2	**Conveyor type:** AC2
B▢	**Workpiece pallet width:** 160 / 240 / 320 / 400 / 480 / 560 / 640 / 800 / 1040 / 1200
L▢	**Conveyor length:** 300≤L≤6000
▢	**Glide profile material:** PW(Plastic)(Default), SW(Steel)
V▢	**Rated speed:** 0 1) / 6 / 9 / 12 / 15 / 18 / customized
▢	**Motor mounting location:** L(left), R(Right), ML(Middle-Left), MR(middle-Right)
A▢	**Motor mounting angle:** 0 / 90 / 180 / 270
▢	**Motor type:** ZY02(Default brand)
SP	**Special requirements:** a.Working voltage b.Working frequency c.Terminal box direction d.Motor connection e.Motor mounting location f.Automatic lubricate unit g.Reversible operation 1) V=0 means no motor

Ordering example

AC2—B240—L2500—PW—V12—L—A0—ZY02

Conveyor type: AC2	**Workpiece pallet width:** Bwt=240	**Conveyor length:** L=2500	**Glide profile material:** PW(Plastic)
Rated speed: 12m/min	**Motor mounting location:** L(left)	**Motor mounting angle:** 0°	**Motor type:** ZY02
Special requirements: None			

AC2U Accumulated chain conveyor

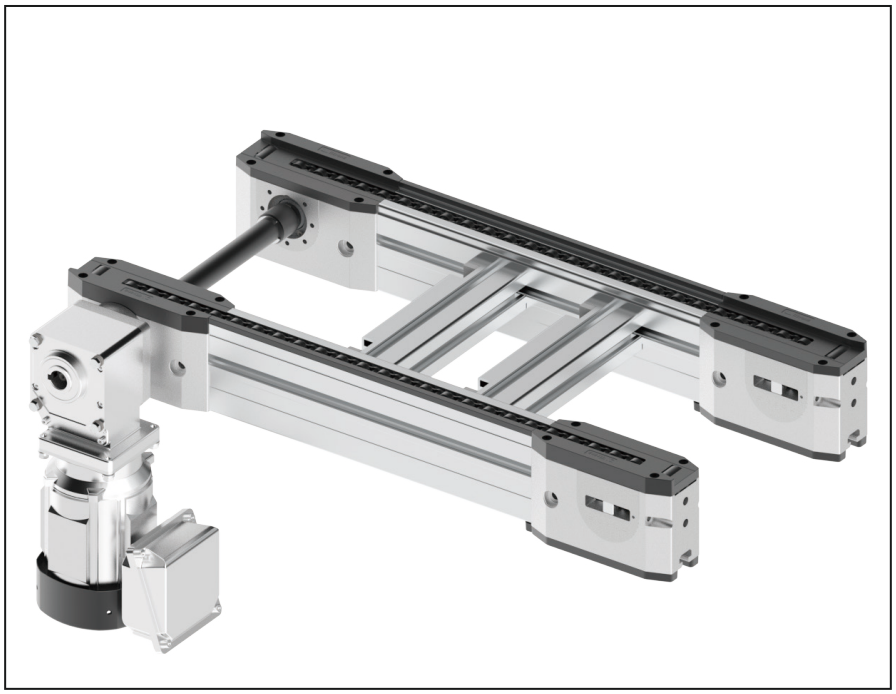

Delivery notes

Scope of delivery:

Conveyor

Motor(with terminal box)

Condition on delivery:

Fully assembled

Recommended accessories:

Connection kit

Conveyor leg(with foundation bracket and bolts)

Automatic lubricate unit

Chain installation tool

- Conveyor medium: Accumulated chain
- Motor: Three phase motor[1],
  Motor mounting location and angle has multiple options(Refer to below diagram)
- Accumulated chain with cover(to avoid small parts fall into chain gap) for option
- Reversible operation possible for conveyor length less than 2000 mm and accumulated chain without cover
- Accumulation operation possible
- Compliant with ESD
- Support customization

1 Support other motor type

AC2U - Dimensions

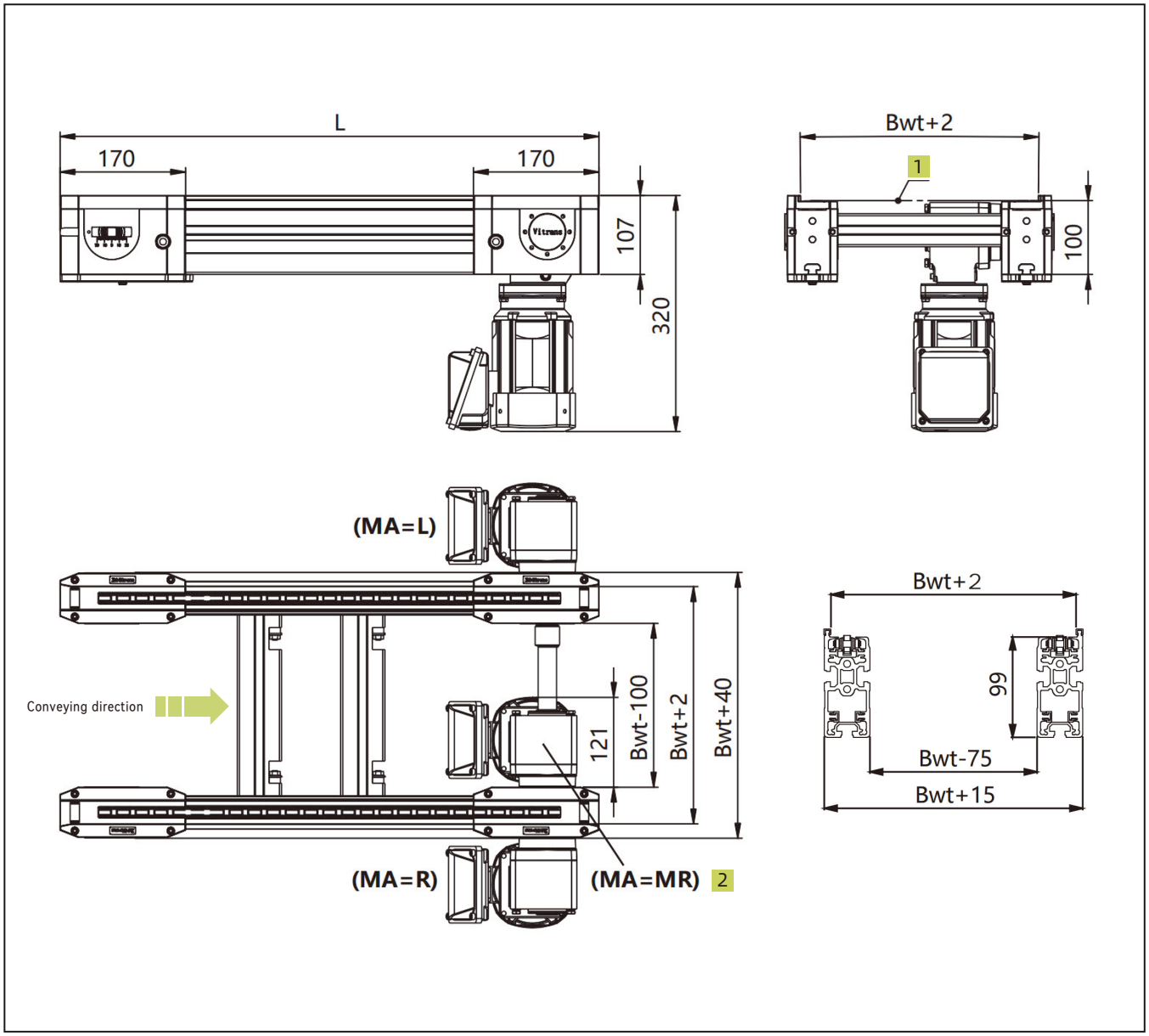

1. Conveyor medium top face

2. For MA=M, please confirm with Vitrans first.

Technical data

Conveyor medium*		Steel accumulated chain(Default), plastic accumulated chain, Steel accumulated chain with cover, plastic accumulated chain with cover
Workpiece pallet width(mm)*	Bwt	160,240,320,400,480,560,640,800,1040,1200
Conveyor length(mm)*	L	500≤L≤6000 (Reversible operation possible for conveyor length ≤2000 mm and accumulated chain without cover)
Rated speed(m/min)*	V	0,6,9,12,15,18
Permitted maximum load(kg)*		300
Permitted maximum surface load*		1.5kg/cm (with plastic glide profile), 2.0kg/cm(with steel glide profile)
Motor type*		Three phase motor
Motor mounting location*	MA	L(left), R(Right), ML(Middle-Left), MR(middle-Right)
Motor mounting angle*		0°,90°,180°,270°
Working voltage*	U	220/380AC
Working frequency*	f	50Hz
Motor connection*	AT	Terminal box

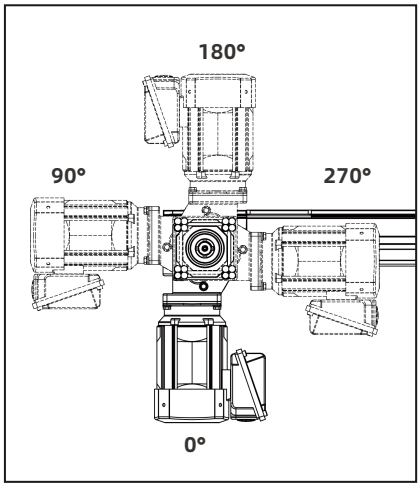

▲ Motor mounting location diagram

Workpiece pallet width	Support customization
Rated speed	V=0 means no motor. Support customizing other speed.
Motor mounting location	MA=M requires conveyor Bwt≥240mm.
Working voltage	Support customizing other working voltage.
Working frequency	**a.**Support customizing other working frequency. **b.**VFD can be used for speed adjusting.
Motor connection	Default terminal box direction is shown in the figure. For other request, please contact us.

Ordering information

AC2U	**Conveyor type:** AC2U
B▢	**Workpiece pallet width:** 160 / 240 / 320 / 400 / 480 / 560 / 640 / 800 / 1040 / 1200
L▢	**Conveyor length:** 500≤L≤6000
▢	**Glide profile material:** PW(Plastic)(Default), SW(Steel)
V▢	**Rated speed:** 0 1) / 6 / 9 / 12 / 15 / 18 / customized
▢	**Motor mounting location:** L(left), R(Right), ML(Middle-Left), MR(middle-Right)
A▢	**Motor mounting angle:** 0 / 90 / 180 / 270
▢	**Motor type:** ZY02(Default brand)
SP	**Special requirements:** a.Working voltage b.Working frequency c.Terminal box direction d.Motor connection e.Motor mounting location f.Automatic lubricate unit g.Reversible operation 1) V=0 means no motor

Ordering example

AC2U—B240—L2500—PW—V12—L—A0—ZY02

Conveyor type: AC2U	**Workpiece pallet width:** Bwt=240	**Conveyor length:** L=2500	**Glide profile material:** PW(Plastic)
Rated speed: 12m/min	**Motor mounting location:** L(left)	**Motor mounting angle:** 0°	**Motor type:** ZY02
Special requirements: None			

AC2L Accumulated chain conveyor

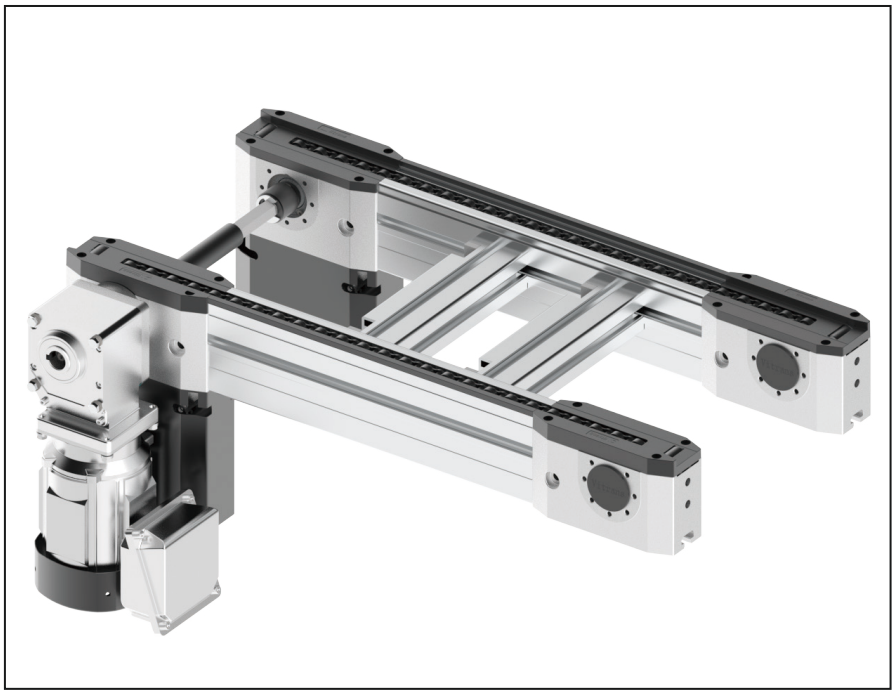

Delivery notes

Scope of delivery:

Conveyor

Motor(with terminal box)

Condition on delivery:

Fully assembled

Recommended accessories:

Connection kit

Conveyor leg(with foundation bracket and bolts)

Automatic lubricate unit

Chain installation tool

- Conveyor medium: Accumulated chain
- Motor: Three phase motor[1],
  Motor mounting location and angle has multiple options(Refer to below diagram)
- Accumulated chain with cover(to avoid small parts fall into chain gap) for option
- Reversible operation possible for conveyor length less than 2000 mm and accumulated chain without cover
- Accumulation operation possible
- Compliant with ESD
- Support customization

1 Support other motor type

AC2L - Dimensions

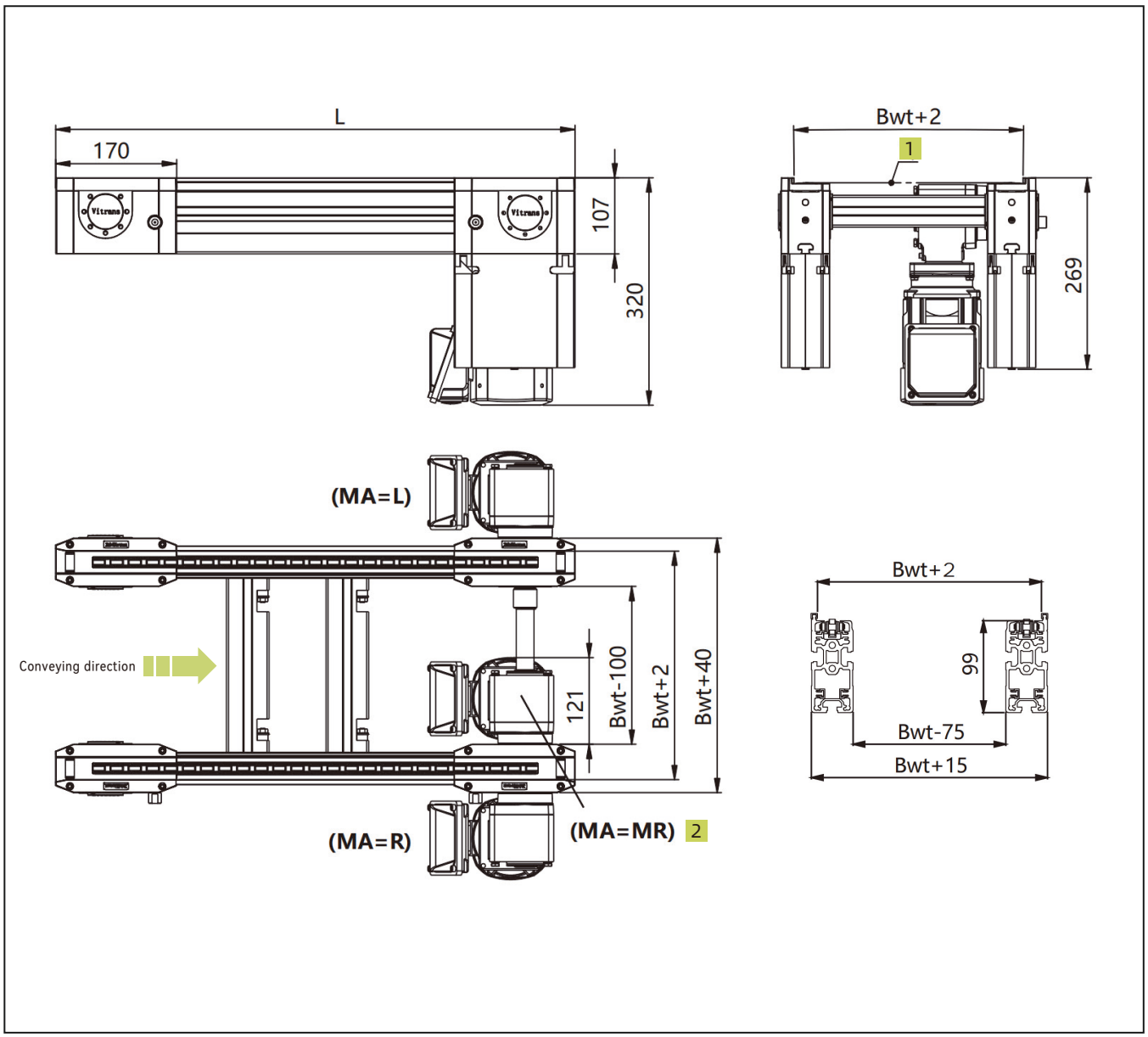

1. Conveyor medium top face
2. For MA=M, please confirm with Vitrans first.

Technical data

Conveyor medium*		Steel accumulated chain(Default), plastic accumulated chain, Steel accumulated chain with cover, plastic accumulated chain with cover
Workpiece pallet width(mm)*	Bwt	160,240,320,400,480,560,640,800,1040,1200
Conveyor length(mm)*	L	500≤L≤15000 (Reversible operation possible for conveyor length ≤2000 mm and accumulated chain without cover)
Rated speed(m/min)*	V	0,6,9,12,15,18
Permitted maximum load(kg)*		700
Permitted maximum surface load*		1.5kg/cm (with plastic glide profile), 2.0kg/cm(with steel glide profile)
Motor type*		Three phase motor
Motor mounting location*	MA	L(left), R(Right), ML(Middle-Left), MR(middle-Right)
Motor mounting angle*		0°,90°,180°,270°
Working voltage*	U	220/380AC
Working frequency*	f	50Hz
Motor connection*	AT	Terminal box

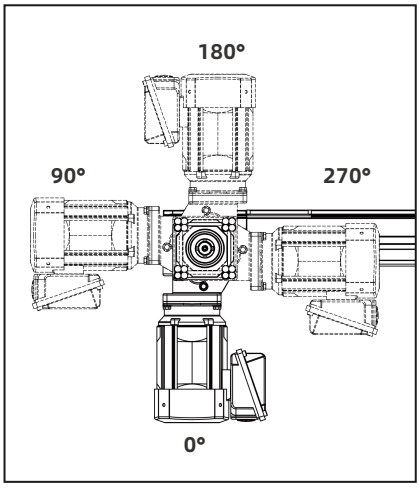

▲ Motor mounting location diagram

Workpiece pallet width	Support customization
Rated speed	V=0 means no motor. Support customizing other speed.
Motor mounting location	MA=M requires conveyor Bwt≥240mm.
Working voltage	Support customizing other working voltage.
Working frequency	**a.**Support customizing other working frequency. **b.**VFD can be used for speed adjusting.
Motor connection	Default terminal box direction is shown in the figure. For other request, please contact us.

Ordering information

AC2L	**Conveyor type:** AC2L
B▢	**Workpiece pallet width:** 160 / 240 / 320 / 400 / 480 / 560 / 640 / 800 / 1040 / 1200
L▢	**Conveyor length:** 500≤L≤15000
▢	**Glide profile material:** PW(Plastic)(Default), SW(Steel)
V▢	**Rated speed:** 0 1) / 6 / 9 / 12 / 15 / 18 / customized
▢	**Motor mounting location:** L(left), R(Right), ML(Middle-Left), MR(middle-Right)
A▢	**Motor mounting angle:** 0 / 90 / 180 / 270
▢	**Motor type:** ZY05(Default brand)
SP	**Special requirements:** a.Working voltage b.Working frequency c.Terminal box direction d. Motor connection e. Motor mounting location f.Automatic lubricate unit g.Reversible operation 1) V=0 means no motor

Ordering example

AC2L—B240—L2500—PW—V12—L—A0—ZY05

Conveyor type: AC2U	**Workpiece pallet width:** Bwt=240	**Conveyor length:** L=2500	**Glide profile material:** PW(Plastic)
Rated speed: 12m/min	**Motor mounting location:** L(left)	**Motor mounting angle:** 0°	**Motor type:** ZY05
Special requirements: None			

AC2/H Accumulated chain conveyor

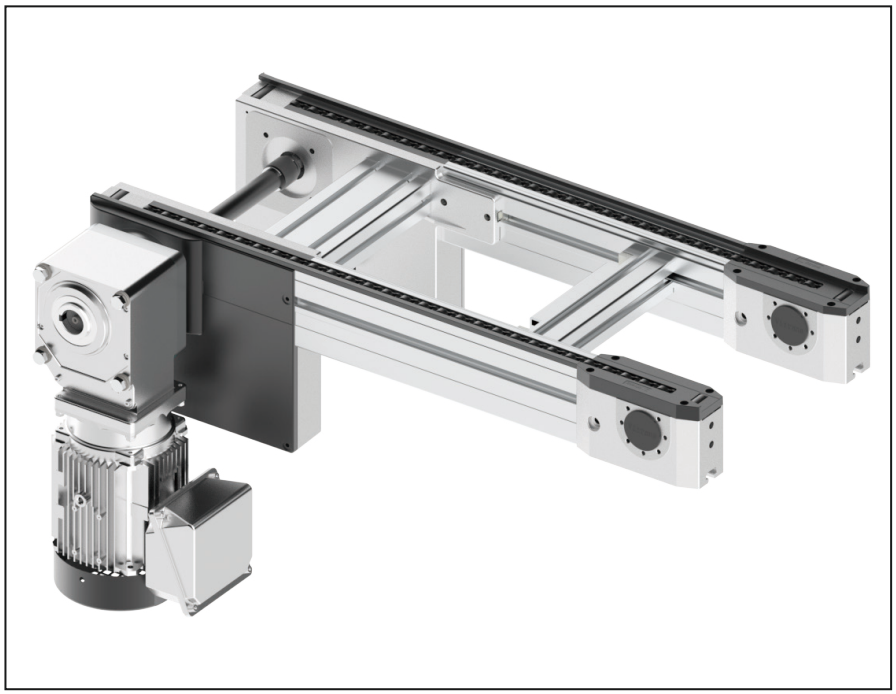

Delivery notes

Scope of delivery:

Conveyor

Motor(with terminal box)

Condition on delivery:

Fully assembled

Recommended accessories:

Connection kit

Conveyor leg(with foundation bracket and bolts)

Automatic lubricate unit

Chain installation tool

- Conveyor medium: Accumulated chain
- Motor: Three phase motor[1],
  Motor mounting location and angle has multiple options(Refer to below diagram)
- Accumulated chain with cover(to avoid small parts fall into chain gap) for option
- Accumulation operation possible
- Compliant with ESD
- Support customization

1 Support other motor type

AC2/H - Dimensions

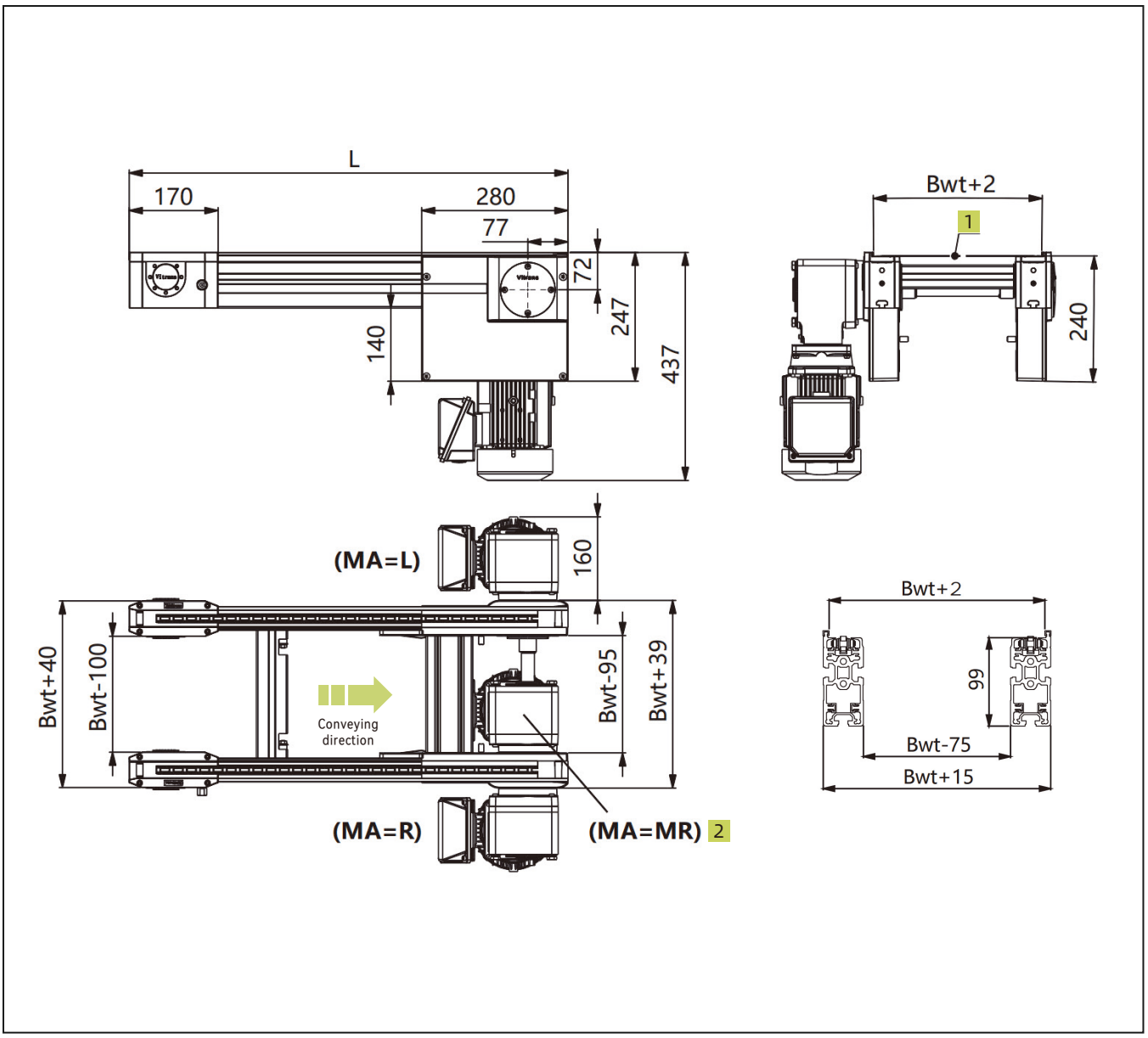

1. Conveyor medium top face
2. For MA=M, please confirm with Vitrans first.

Technical data

Conveyor medium*		Steel accumulated chain(Default), plastic accumulated chain, Steel accumulated chain with cover, plastic accumulated chain with cover
Workpiece pallet width(mm)*	Bwt	160,240,320,400,480,560,640,800,1040,1200
Conveyor length(mm)*	L	1000≤L≤15000 (Reversible operation possible for conveyor length ≤2000 mm and accumulated chain without cover)
Rated speed(m/min)*	V	0,6,9,12,15,18
Permitted maximum load(kg)*		2200
Permitted maximum surface load*		1.5kg/cm (with plastic glide profile), 2.0kg/cm(with steel glide profile)
Motor type*		Three phase motor
Motor mounting location*	MA	L(left), R(Right), ML(Middle-Left), MR(middle-Right)
Motor mounting angle*		0°,90°,180°,270°
Working voltage*	U	220/380AC
Working frequency*	f	50Hz
Motor connection*	AT	Terminal box

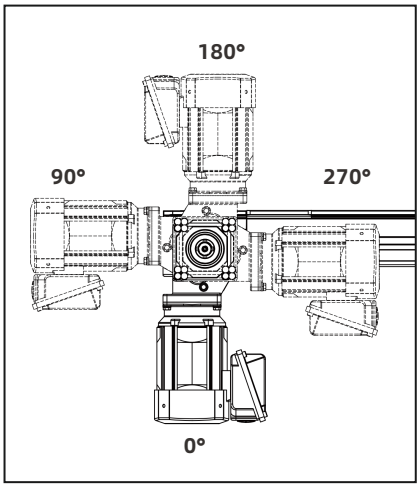

▲ Motor mounting location diagram

Workpiece pallet width	Support customization
Rated speed	V=0 means no motor. Support customizing other speed.
Motor mounting location	MA=M requires conveyor Bwt≥240mm.
Working voltage	Support customizing other working voltage.
Working frequency	**a.**Support customizing other working frequency. **b.**VFD can be used for speed adjusting.
Motor connection	Default terminal box direction is shown in the figure. For other request, please contact us.

Ordering information

AC2/H	**Conveyor type:** AC2/H
B▢	**Workpiece pallet width:** 160 / 240 / 320 / 400 / 480 / 560 / 640 / 800 / 1040 / 1200
L▢	**Conveyor length:** 1000≤L≤15000
▢	**Glide profile material:** PW(Plastic)(Default), SW(Steel)
V▢	**Rated speed:** 0 1) / 6 / 9 / 12 / 15 / 18 / customized
▢	**Motor mounting location:** L(left), R(Right), ML(Middle-Left), MR(middle-Right)
A▢	**Motor mounting angle:** 0 / 90 / 180 / 270
▢	**Motor type:** ZY075(Default brand)
SP	**Special requirements:** a.Working voltage b.Working frequency c.Terminal box direction d.Motor connection e.Motor mounting location f.Automatic lubricate unit g.Reversible operation 1) V=0 means no motor

Ordering example

AC2/H—B240—L2500—PW—V12—L—A0—ZY075

Conveyor type: AC2/H	**Workpiece pallet width:** Bwt=240	**Conveyor length:** L=2500	**Glide profile material:** PW(Plastic)
Rated speed: 12m/min	**Motor mounting location:** L(left)	**Motor mounting angle:** 0°	**Motor type:** ZY075
Special requirements: None			

AC2 Series conveyor section dimensions

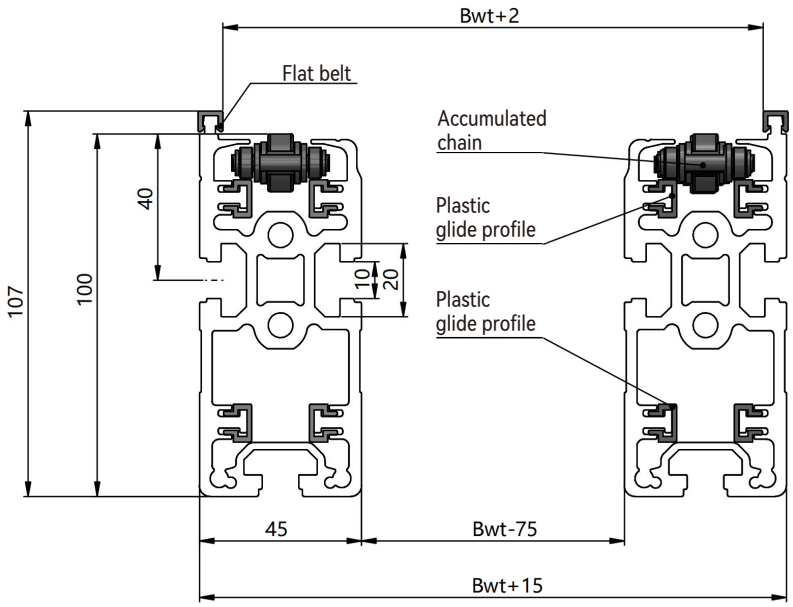

Accumulated chain conveyor with plastic glide profile

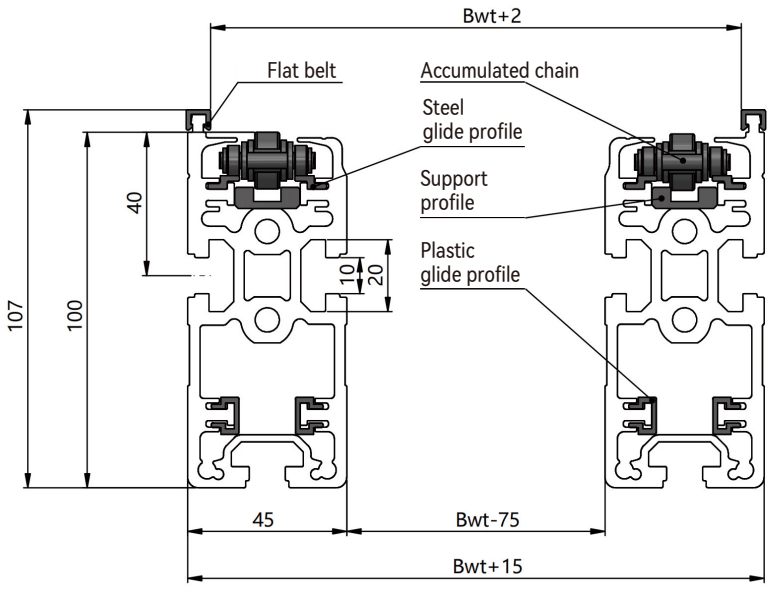

Accumulated chain conveyor with steel glide profile

- Permitted maximum surface load with plastic glide profile: 1.5kg/cm
- Permitted maximum surface load with steel glide profile: 2kg/cm
- Default glide profile: Plastic

PC2 Plastic chain conveyor

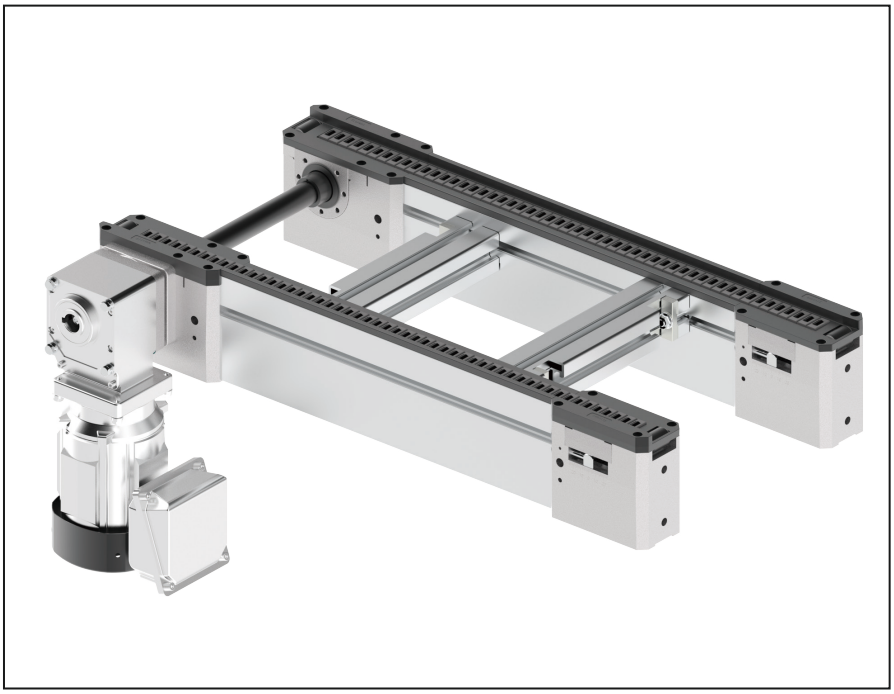

Delivery notes

Scope of delivery:

Conveyor

Motor(with terminal box)

Condition on delivery:

Fully assembled

Recommended accessories:

Connection kit

Conveyor leg(with foundation bracket and bolts)

Automatic lubricate unit

Chain installation tool

- Conveyor medium: Plastic chain conveyor
- Motor: Three phase motor[1],
  Motor mounting location and angle has multiple options(Refer to below diagram)
- Permitted maximum surface load: 0.5kg/cm
- Accumulation operation possible
- Reversible operation not possible
- Compliant with ESD
- Support customization

1 Support other motor type

PC2 - Dimensions

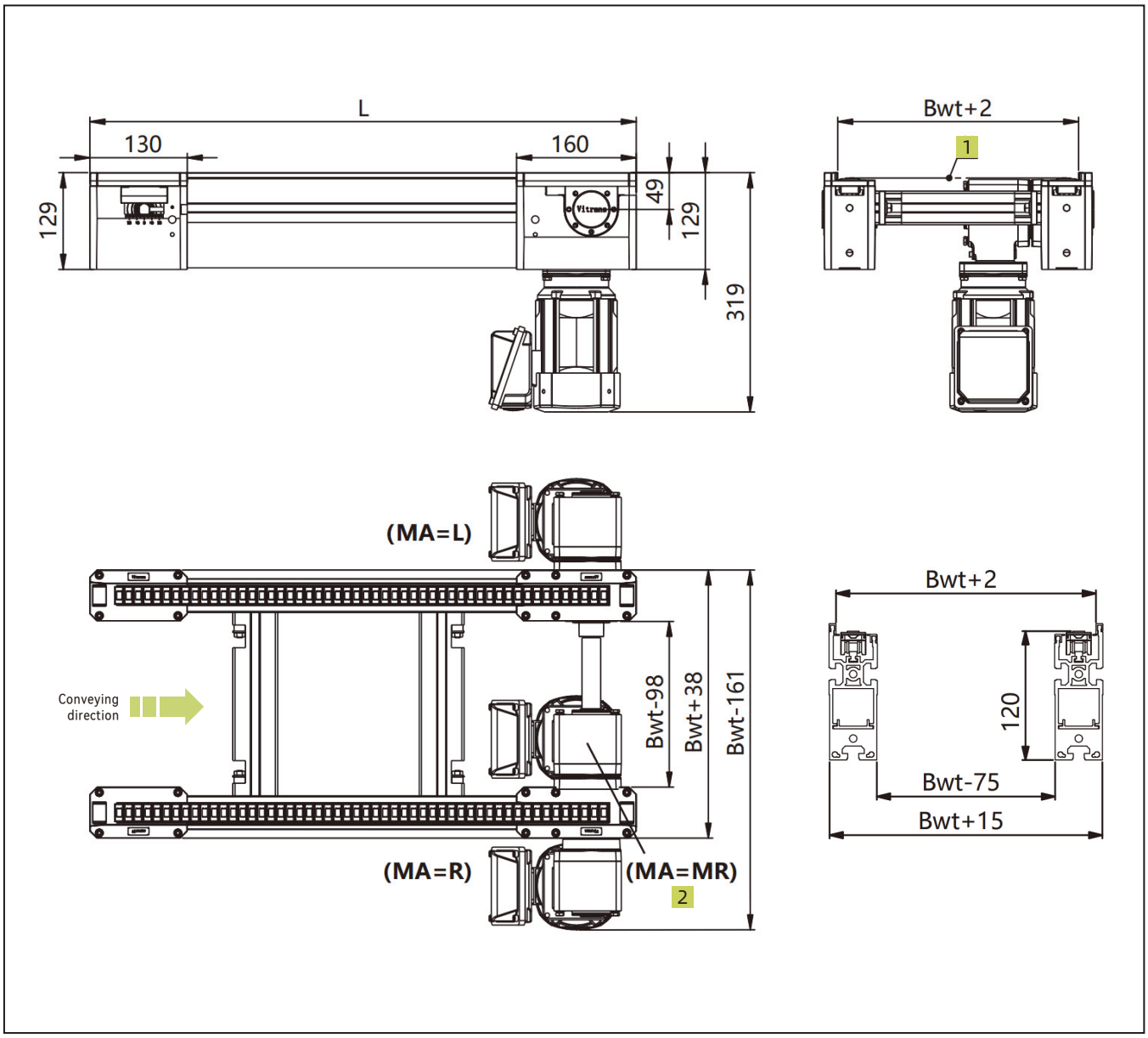

1. Conveyor medium top face
2. For MA=M, please confirm with Vitrans first.

Technical data

Conveyor medium**		Plastic chain conveyor
Workpiece pallet width(mm)*	Bwt	160,240,320,400,480,560,640,800,1040,1200
Conveyor length(mm)*	L	500≤L≤8000
Rated speed(m/min)*	V	0,6,9,12,15,18
Permitted maximum load(kg)*		150
Permitted maximum surface load(kg/cm)*		0.5
Motor type*		Three phase motor
Motor mounting location*	MA	L(left), R(Right), ML(Middle-Left), MR(middle-Right)
Motor mounting angle*		0°,90°,180°,270°
Working voltage*	U	220/380AC
Working frequency*	f	50Hz
Motor connection*	AT	Terminal box

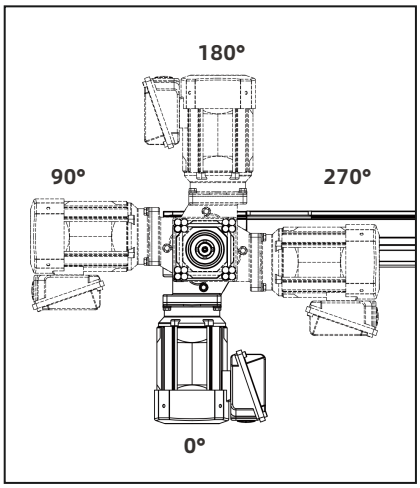

▲ Motor mounting location diagram

Workpiece pallet width	Support customization
Rated speed	V=0 means no motor. Support customizing other speed.
Motor mounting location	MA=M requires conveyor Bwt≥240mm.
Working voltage	Support customizing other working voltage.
Working frequency	**a.**Support customizing other working frequency. **b.**VFD can be used for speed adjusting.
Motor connection	Default terminal box direction is shown in the figure. For other request, please contact us.

Ordering information

PC2	**Conveyor type:** PC2
B ▢	**Workpiece pallet width:** 160 / 240 / 320 / 400 / 480 / 560 / 640 / 800 / 1040 / 1200
L ▢	**Conveyor length:** 500≤L≤8000
V ▢	**Rated speed:** 0 1) / 6 / 9 / 12 / 15 / 18 / customized
▢	**Motor mounting location:** L(left), R(Right), ML(Middle-Left), MR(middle-Right)
A ▢	**Motor mounting angle:** 0 / 90 / 180 / 270
▢	**Motor type:** ZY02(Default brand)
SP	**Special requirements:** a. Working voltage b. Working frequency c. Terminal box direction d. Motor connection e. Motor mounting location 1) V=0 means no motor

Ordering example

PC2—B400—L4000—V15—L—A0—ZY02

Conveyor type: PC2	**Workpiece pallet width:** Bwt=400	**Conveyor length:** L=4000	**Rated speed:** 15m/min
Motor mounting location: L(left)	**Motor mounting angle:** 0°	**Motor type:** ZY02	**Special requirements:** None

PC2 Conveyor section dimensions

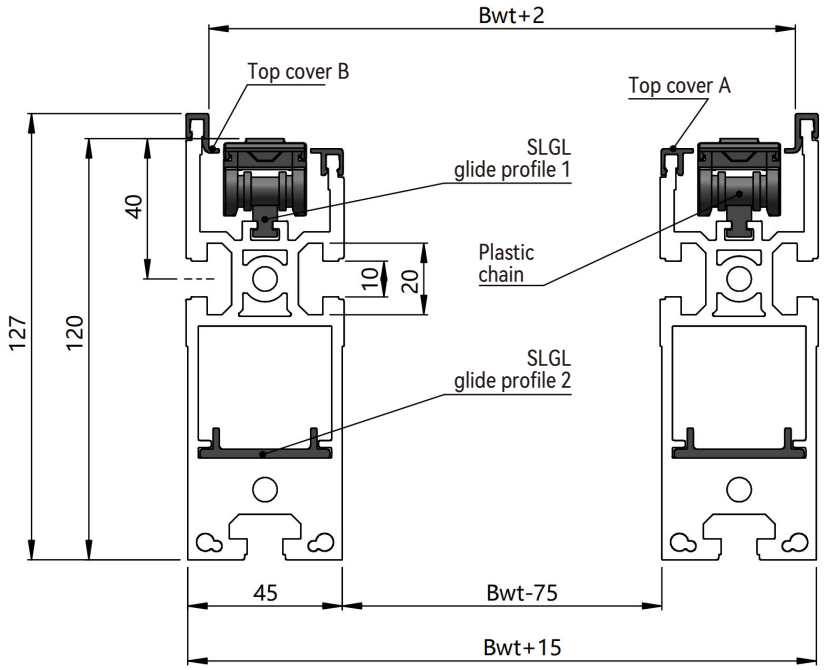

Profile connector

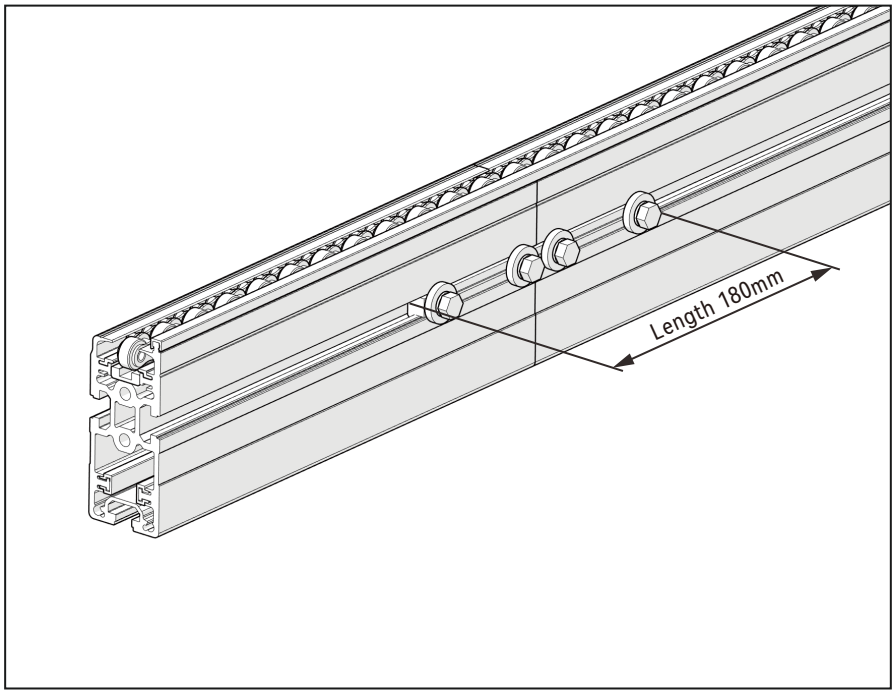

- For connecting two conveyor section profiles.
- Two profile connectors are recommended for each profile joint.
- Joint position(180mm) cannot install stopper, lift and locate unit, or lift and transfer unit.
- Suitable for BC2, FC2, AC2 and PC2 conveyor section.

TG2/H Lift gate

TG2/H lift gate provides access or passage to the inner spaces of a conveyor system. Manually tilting the conveyor can open it from 0° to 85°. The effort required to do this is reduced with the aid of a gas pressure spring.

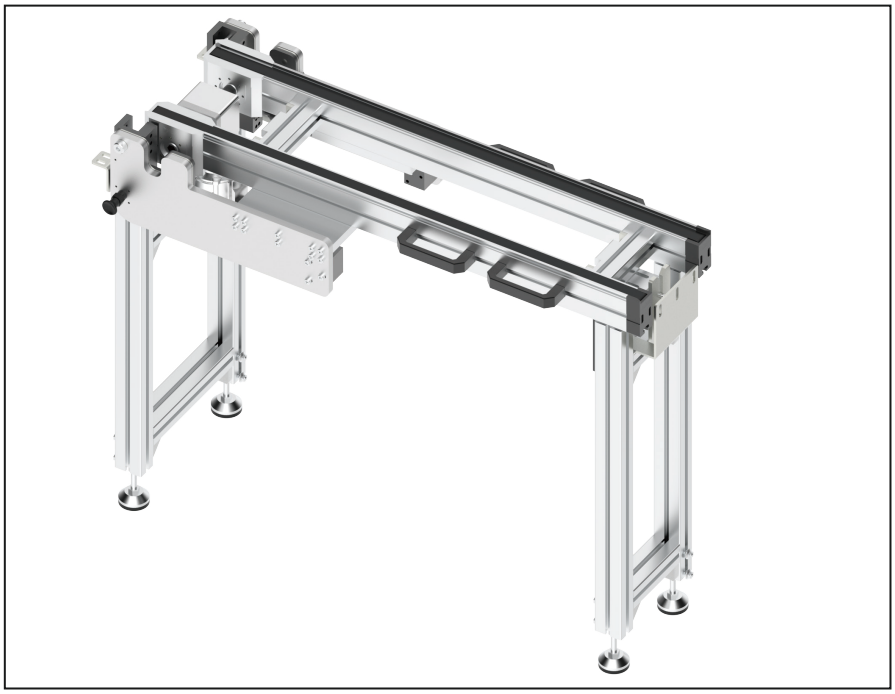

Delivery notes

Scope of delivery:

Lift gate
Gas pressure spring
Lock mechanism
Safety switch
Assembly kit

Condition on delivery:

Fully assembled

Recommended accessories:

Conveyor
Conveyor leg(with foundation bracket and bolts)
Aluminum profile 45x60
Corner parts 45x45

- Conveyor length(L) is equal to required access width(A) plus 500mm.
- Installation space of TG2/H lift gate is equal to required access width(A) plus 535mm.

1 The above figure takes BC2 conveyor for example.

TG2/H - Dimensions （Takes BC2 conveyor for example）

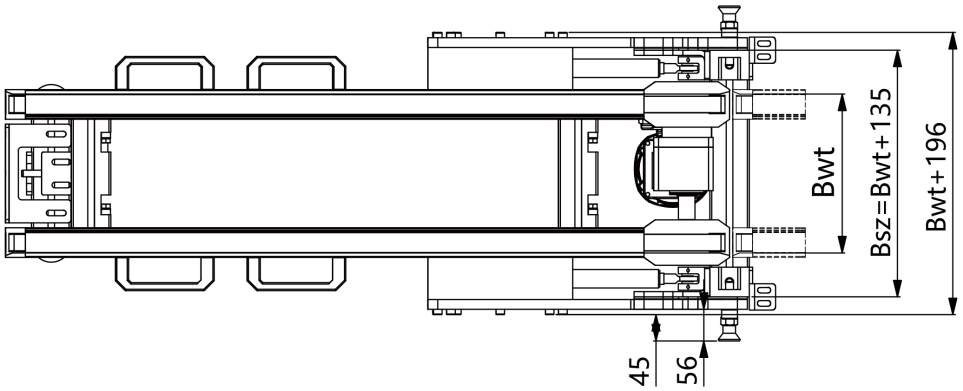

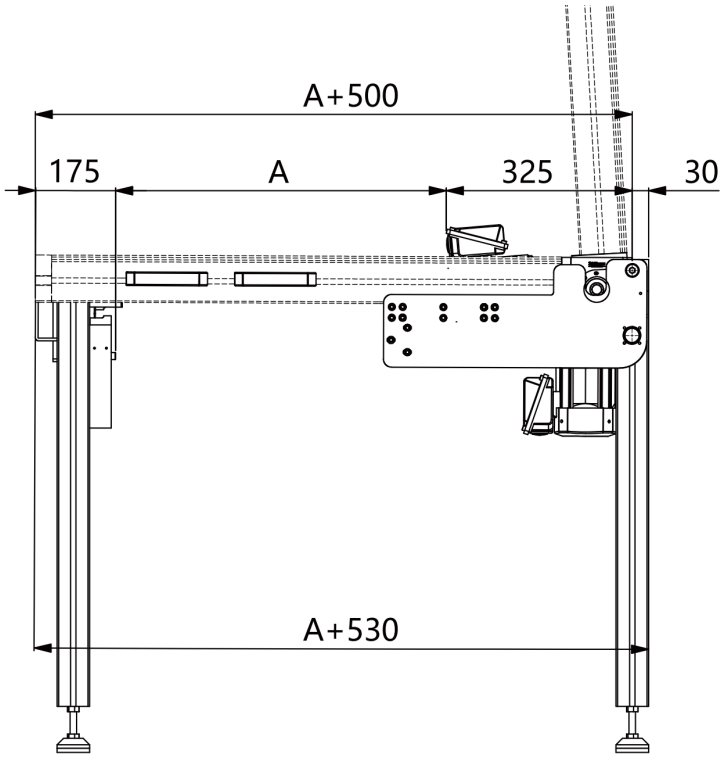

Note: Workpiece pallet width must ≥ 240mm, and motor must be mounted at middle location.

TG2/H - Application

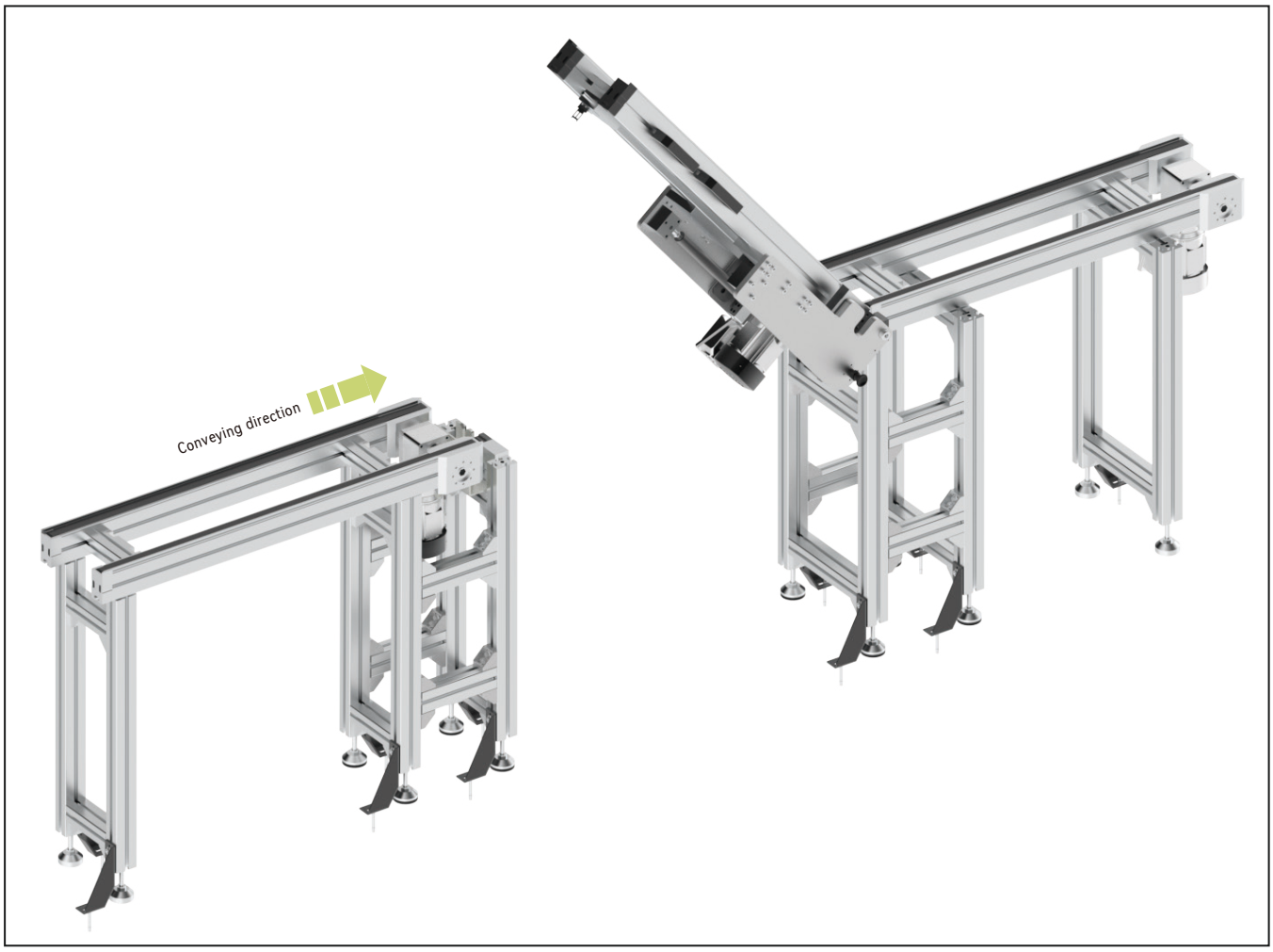

Technical data

Conveyor type*		BC2,AC2,AC2U,AC2L,PC2
Workpiece pallet width(mm)*	Bwt	240,320,400,480,560,640,800,1040,1200
Access width(mm)*	A	600,700,800,900,1000,1100,1200,1300,1400,1500,1600,1700,1800
Maximum tilting angle*		85°

Ordering information

TG2/H	**Lift gate:** TG2/H
B ▢	**Workpiece pallet width:** 240 / 320 / 400 / 480 / 560 / 640 / 800 / 1040 / 1200
A ▢	**Access width:** 600 / 700 / 800 / 900 / 1000 / 1100 / 1200 / 1300 / 1400 / 1500 / 1600 / 1700 / 1800
▢	**Conveyor type:** BC2 / AC2 / AC2U / AC2L /PC2
▢	**Motor mounting location:** ML(Middle-Left),MR(middle-Right)

Ordering example

TG2/H—B400—A1000—BC2—ML

Lift gate: TG2/H	**Workpiece pallet width:** Bwt=400	**Access width:** A=1000	**Conveyor type:** BC2
Motor mounting location: ML(Middle-Left)	**Special requirements:** None		

AC2/R Connection belt

The connection of the drive and return units of AC2/U, AC2/L and AC2/H results in short, non-driven sections. The connection belt is used to bridge these > 180 mm conveyor trenches by using short Lwt < 320 mm workpiece pallets.



Delivery notes

Scope of delivery:
Connection belt

Condition on delivery:
Fully assembled

- Conveyor medium: Timing belt
- Passive mechanism, without power
- Paired use, connection belt left and right are mirrored

Note: While workpiece pallet width Bwt < 240mm, only can install connection belt left or right.

AC2/R - Dimensions

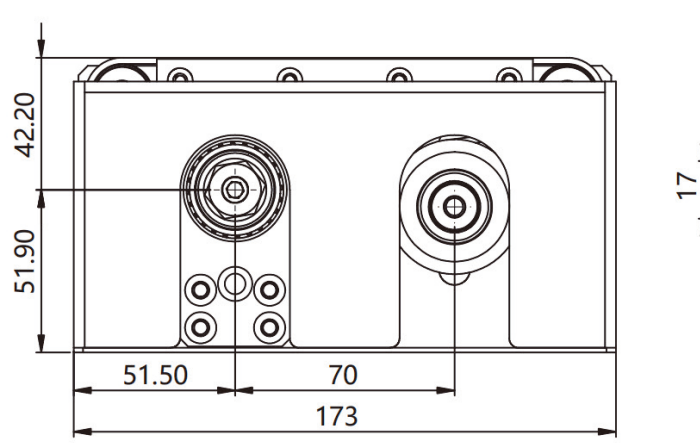

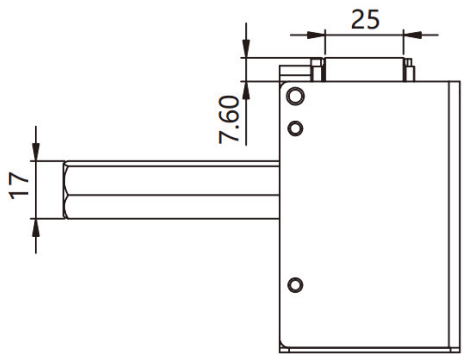

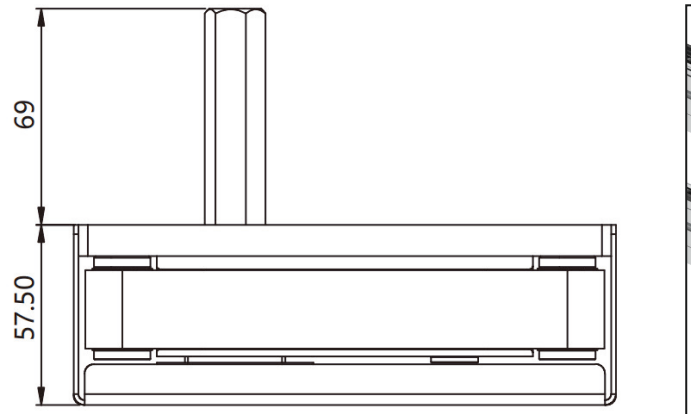

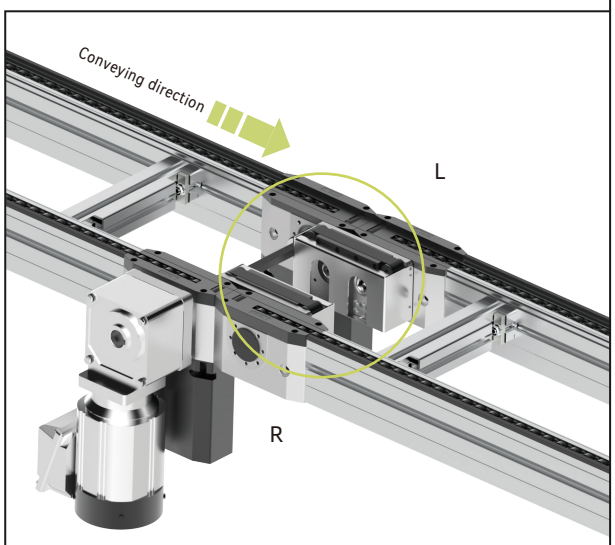

Application case

Product description	Connection belt
Model	AC2/R.L(Connection belt-left)
	AC2/R.R(Connection belt-right)

RH3 Automatic lubricate unit

Automatically adding lubricating oil to the conveyor medium in a timed and quantitative manner.



Delivery notes

Scope of delivery:

Automatic lubricate unit
Mounting bracket
Tee fitting
Tube
Connector
Flange
Adapter

Condition on delivery:

Fully assembled

Recommended accessories:

Oil (VG 68 Industrial oil)

- Suitable for accumulated chain, flat top chain and plastic chain.
- Two control modes for option, pulse or timing control.
- Working principle: The lubricate unit is powered by a DC motor, and through a reduction gear set, it reduces speed and increases torque to achieve the delivery of high viscosity lubricating oil. Through the built-in electronic control module (time mode) or PLC pulse control (pulse mode), the lubricating oil is continuously output in a timed and quantitative manner.

RH3 - Dimensions

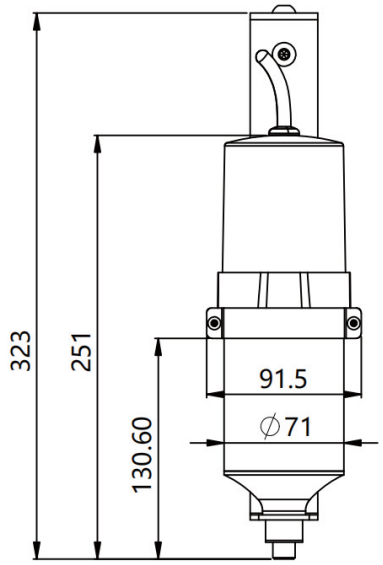

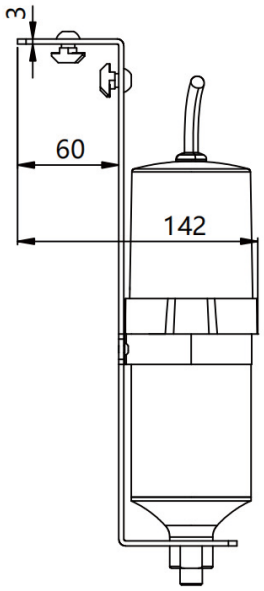

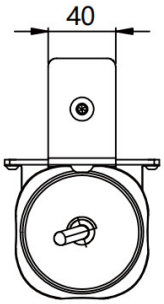

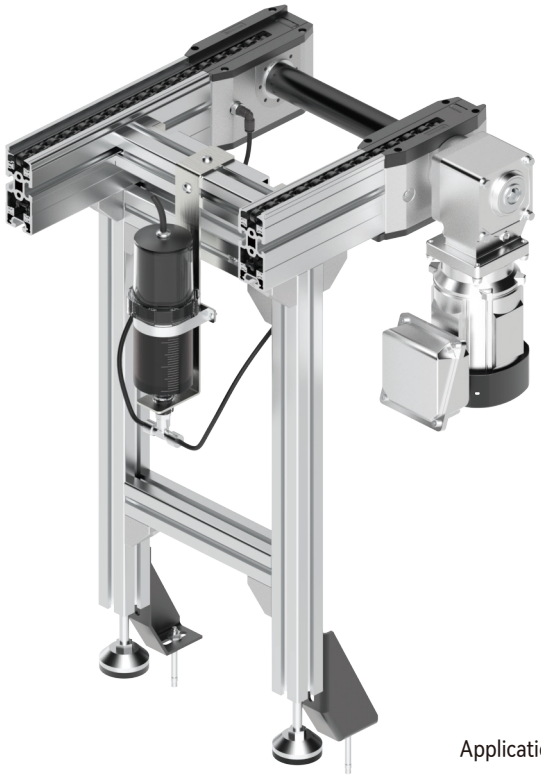

Application case

Product description	Automatic lubricate unit
Model	RH3.01.01

Technical data

Drive method*	DC Motor
Minimum operation interval*	10s
Work pressure*	0-5bar
Work voltage*	VSS-GND 12~24V DC
Work temperature*	-20℃~60℃
Storage temperature*	20℃
Minimum oil output*	0.82ml/per dose
Maximum oil output*	10ml/per dose
Oil container volume*	300ml

Connection kits for longitudinal conveyors

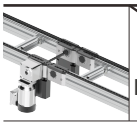 Return unit / Drive unit	FC2 Drive unit	AC2 Return unit AC2 Drive unit	BC2 Return unit	BC2 Drive unit	AC2 Return unit CV2 Return unit	PC2 Return unit
FC2 Drive unit	L-TC0	L-TC1	L-TC2	L-TC2	L-TC1	L-TC3
CV2 Drive unit	L-TC1	L-TC4	L-TC11	L-TC5	L-TC4	L-TC7
AC2, AC2L Drive unit	L-TC1	L-TC4	L-TC11	L-TC5	L-TC4	L-TC7
BC2 Drive unit	L-TC2	L-TC5	L-TC5	L-TC4	L-TC5	L-TC10
BC2 Return unit	L-TC2	L-TC11	L-TC4	L-TC5	L-TC11	L-TC14
AC2U Drive unit	L-TC1	L-TC4	L-TC11	L-TC5	L-TC4	L-TC6
AC2/H Drive unit	L-TC2	L-TC1	L-TC2	L-TC2	L-TC1	L-TC3 Tightening screw in opposite
KV2 Drive unit	L-TC2	L-TC5	L-TC5	L-TC4	L-TC5	L-TC10
PC2 Drive unit	L-TC3	L-TC7	L-TC14	L-TC15	L-TC7	L-TC8

L-TC0

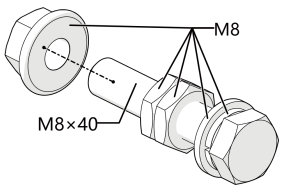

L-TC1

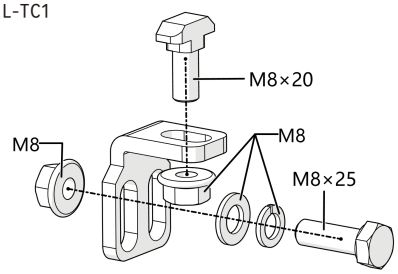

L-TC2

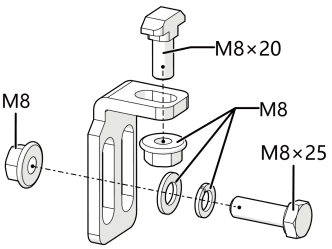

L-TC3

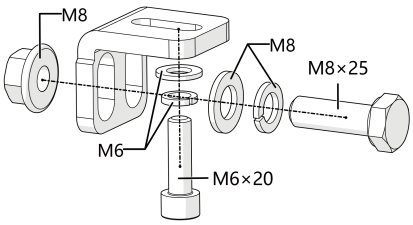

L-TC4

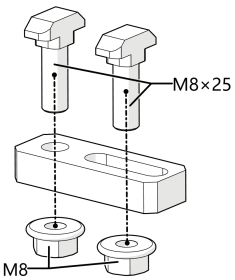

L-TC5

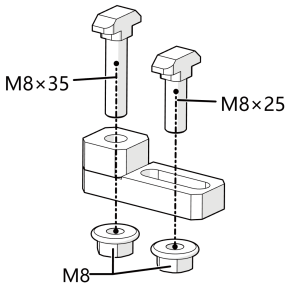

L-TC6

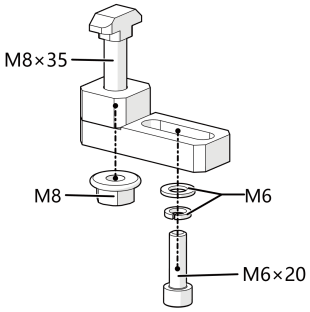

L-TC7

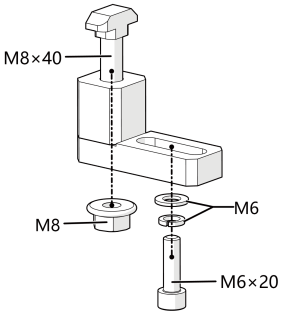

L-TC8

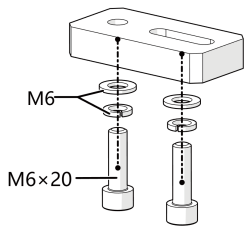

Connection kits for transverse conveyors

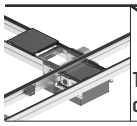 Longitudinal conveyor / Transverse conveyor	BC2/FC2	AC2、AC2U、AC2L、AC2/H	PC2
FC2(Drive or return unit)	L-TC2	L-TC1	L-TC9
CV2(Drive or return unit)	L-TC17	L-TC16	L-TC12
AC2(Drive or return unit)	L-TC17	L-TC16	L-TC12
AC2U(Drive or return unit)	L-TC17	L-TC16	L-TC12
AC2L(Drive or return unit)	L-TC17	L-TC16	L-TC12
AC2/H(Drive unit)	L-TC2	L-TC2	/
AC2/H(Return unit)	L-TC17	L-TC16	L-TC12
BC2(Drive unit)	L-TC4	L-TC11	L-TC14
BC2(Return unit)	L-TC5	L-TC12	L-TC15
PC2(Drive or return unit)	L-TC18	L-TC6	L-TC6

L-TC9

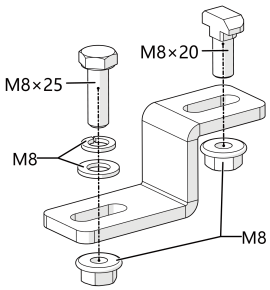

L-TC10

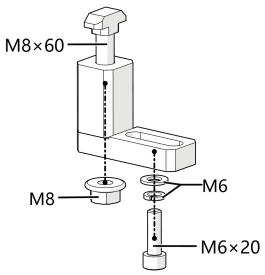

L-TC11

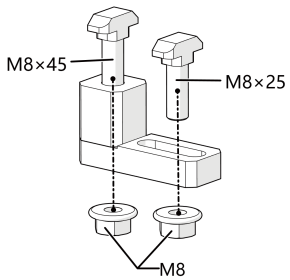

L-TC12

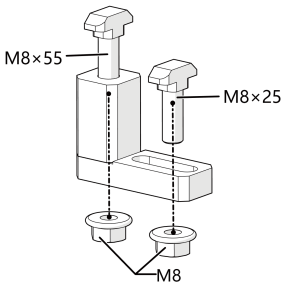

L-TC14

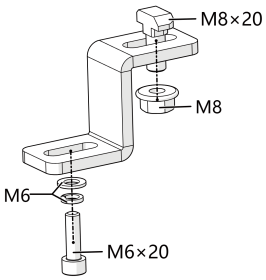

L-TC15

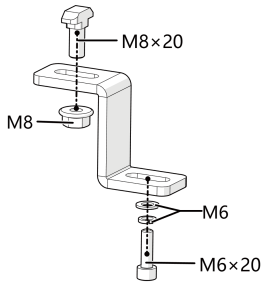

L-TC16

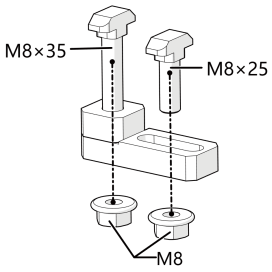

L-TC17

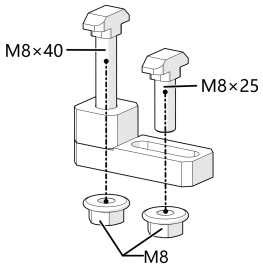

L-TC18

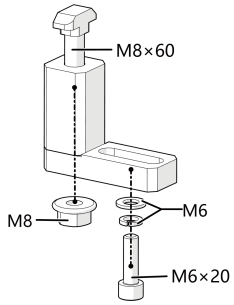

Note：L-TC13 is removed.

Motor technical data of conveyors

Conveyor type	Rated speed (m/min)	Permitted maximum load (kg)	Working frequency (Hz)	Motor power (KW)
BC2 BC2/M	6	60	50	0.2
	9	60	50	0.2
	12	60	50	0.2
	15	60	50	0.2
	18	60	50	0.2
FC2	6	250	50	0.75
	9	250	50	0.75
	12	250	50	0.75
	15	250	50	0.75
	18	250	50	0.75
AC2 AC2U	6	300	50	0.2
	9	300	50	0.2
	12	300	50	0.2
	15	300	50	0.2
	18	300	50	0.2
AC2L	6	700	50	0.4
	9	700	50	0.4
	12	700	50	0.4
	15	700	50	0.4
	18	700	50	0.4
AC2/H	6	2200	50	0.75
	9	2200	50	0.75
	12	2200	50	0.75
	15	2200	50	0.75
	18	2200	50	0.75
PC2	6	150	50	0.2
	9	150	50	0.2
	12	150	50	0.2
	15	150	50	0.2
	18	150	50	0.2

Motor connection

△connection for 220AC input

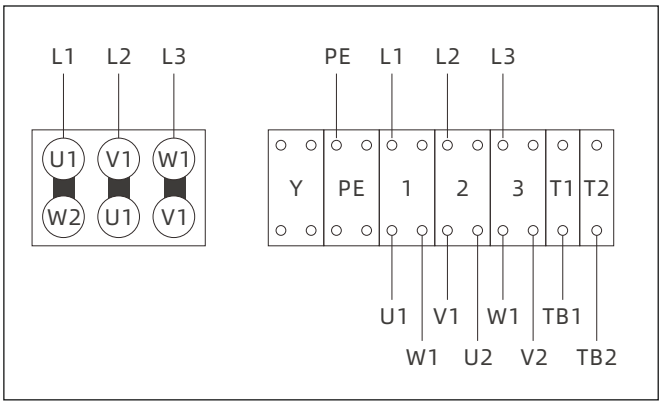

Yconnection for 380AC input

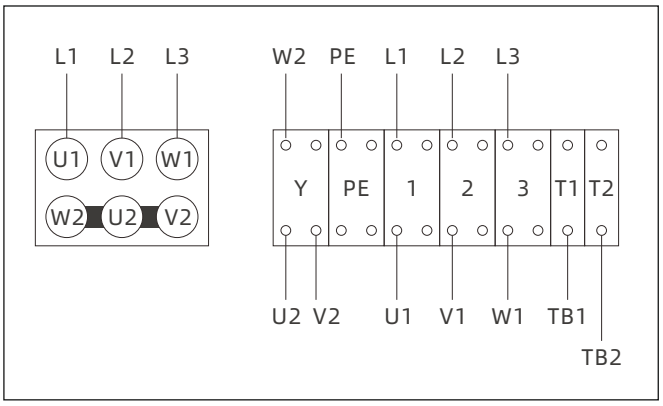

Notes:

a. The motor is suitable for continuous operation, intermittent operation, frequent start-stop, forward and reverse operation.

b.When using a VFD to adjust motor speed, the frequency adjustment range should be within ± 20% of motor rated frequency.

c.Power supply voltage should be within ± 10% of motor work voltage.

d.Working environment temperature: -20 ℃ - +40 ℃.

e.Motor protection level IP65.

04

Locate unit

In order to process and maintain manufacturing tolerances, work piece pallets must be stopped and located in the processing station.

PN——Workpiece pallet inner guide
Suitable for workpiece pallet with low positioning accuracy requirements.

PX——Pin locate unit
Using the pins of locate unit and positioning bushings of workpiece pallet to precisely locate workpiece pallet.

PU——Lift and locate unit
Lift and locate unit can lift the workpiece pallet up to leave the conveyor medium, and precisely locate the workpiece pallet.

PU-L——Lift and locate unit
Lift and locate unit can lift the workpiece pallet up to leave the conveyor medium, and precisely locate the workpiece pallet.

PN Workpiece pallet inner guide

Suitable for workpiece pallet with low positioning accuracy requirements. The inner guide can be fitted with the groove guide of workpiece pallet to limit the workpiece pallet position.

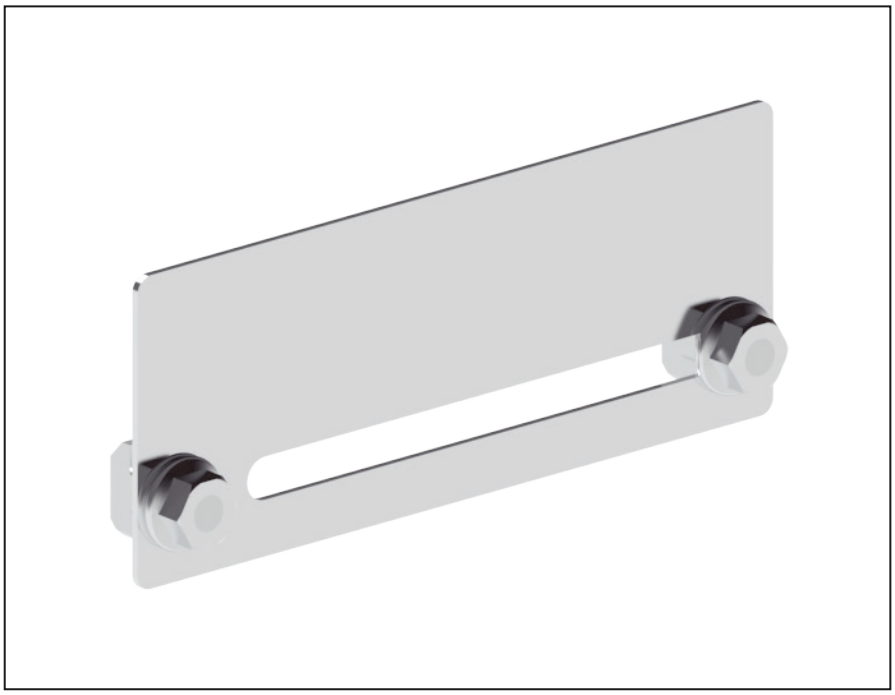

Delivery notes

Scope of delivery:
PN Workpiece pallet inner guide
Assembly kit

Condition on delivery:
Not assembled

Recommended accessories:
Stopper

- Installed on the inner side of conveyor section profile
- Repeat accuracy: ±0.5mm
- Material: Stainless steel
- Suitable for WA2 and WE2 workpiece pallet

PN - Dimensions

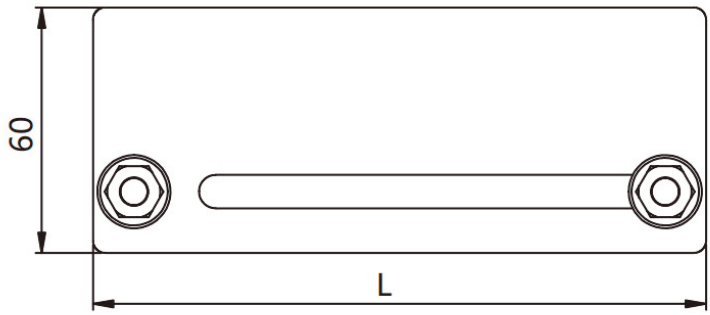

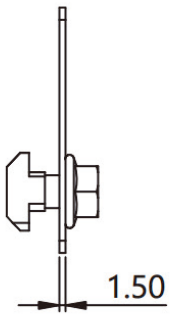

Application case

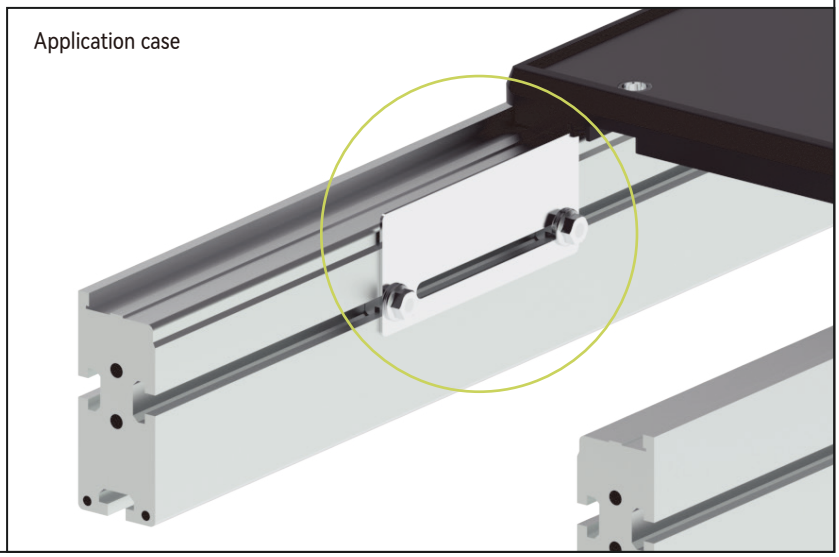

Ordering information

PN	**Locate unit type:** PN workpiece pallet inner guide
L ▢	**Length(mm):** 45 / 150 / 300 / 450 / 600

Selection guidelines:

The inner guide length should be equal or close to workpiece length.

150mm inner guide is suitable for Lwt160 workpiece pallet.

300mm inner guide is suitable for Lwt320 workpiece pallet.

450mm inner guide is suitable for Lwt400 workpiece pallet.

600mm inner guide is suitable for Lwt560 workpiece pallet.

While workpiece pallet length is over 640mm, one pair of 45mm inner guide can be used.

Ordering example

PN—L150

Locate unit type: PN	**Length:** 150	**Repeat accuracy:** ±0.5	**Material:** Stainless steel

PX Pin locate unit

Using the pins of locate unit and positioning bushings of workpiece pallet to precisely locate workpiece pallet.

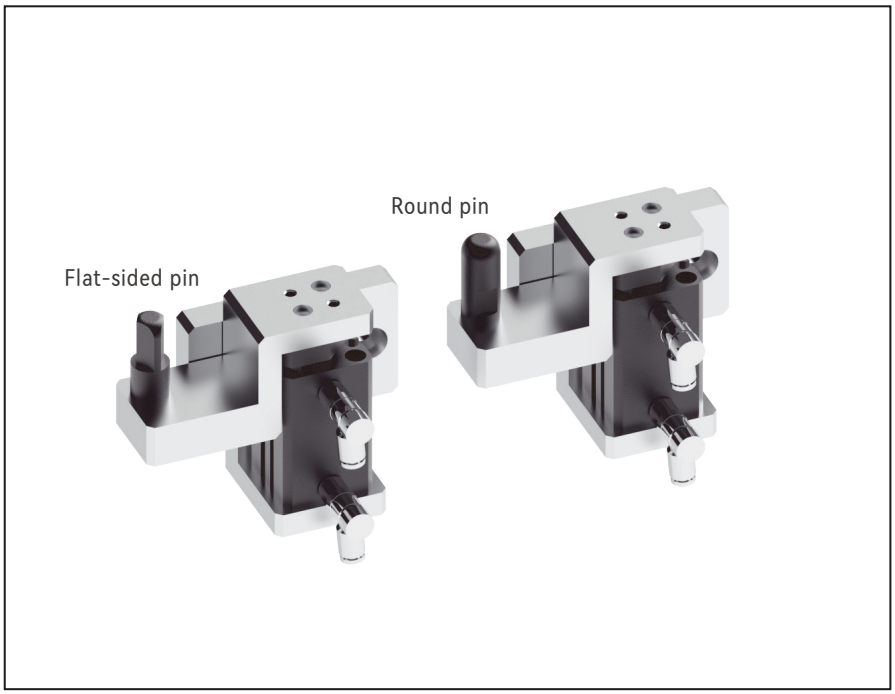

- Pin locate unit cannot lift workpiece pallet up
- Pin locate unit is used in pair
- Can be installed on the conveyor of lifter
- Suitable for WA2 and WE2 workpiece pallet
- Locate accuracy: ±0.1mm

Delivery notes

Scope of delivery:

Pin locate unit(1 pair)
Assembly kit
Throttle value(ϕ6)
Magnetic switches: Two wires type
(No need to distinguish PNP or NPN)
*Note: Magnetic switches includes 500mm cable, without connector.

Condition on delivery:

Fully assembled

Recommended accessories:

Stopper
Two-position five-way dual electronic control solenoid valve

PX - Dimensions

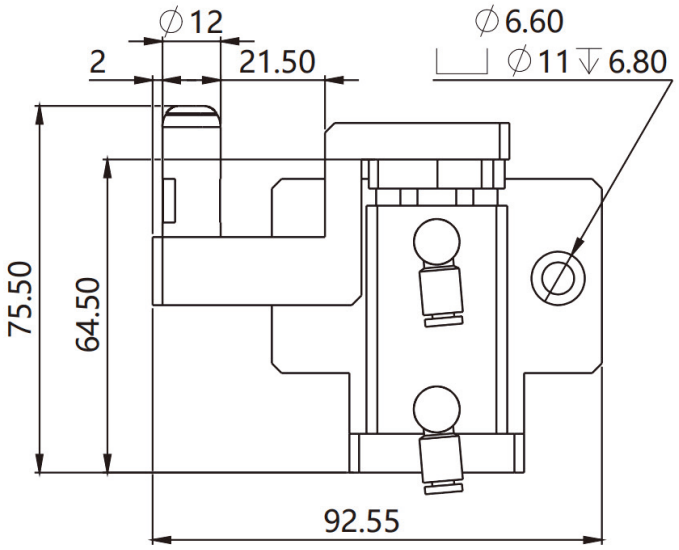

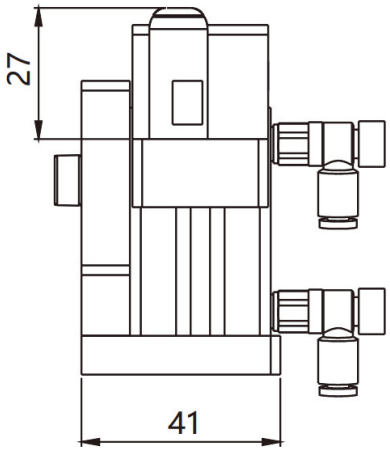

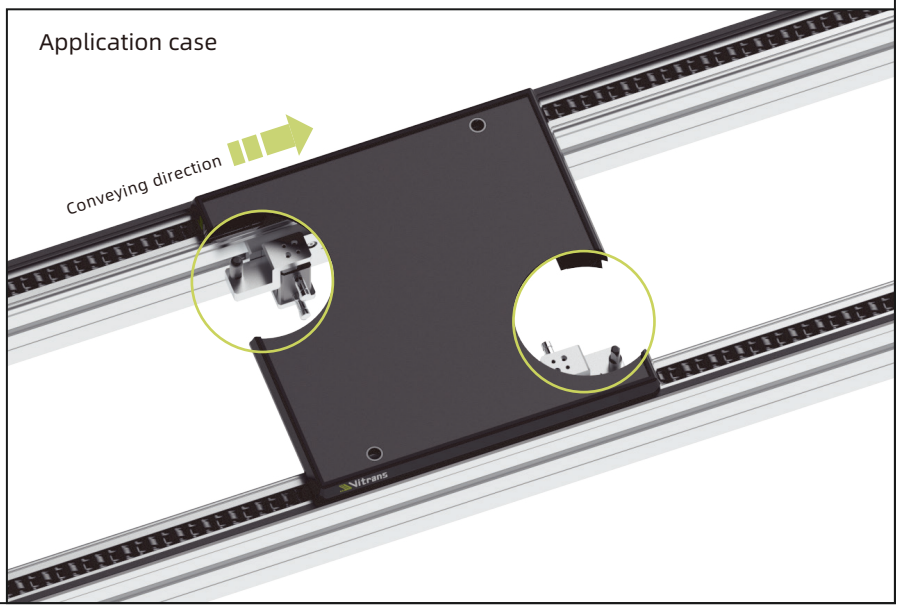

Ordering information

PX	**Locate unit type:** PX pin locate unit
☐	**Adapted conveyor type:** BC2 / AC2 / PC2
☐	**Cylinder brand:** S

Note: While adapted conveyor type is BC2, pin locate unit can also be used on FC2 conveyor.

Ordering example

PX—BC2—S

Locate unit type: PX	**Adapted conveyor type:** BC2	**Cylinder brand:** S

PU Lift and locate unit

Lift and locate unit can lift the workpiece pallet up to leave the conveyor medium, and precisely locate the workpiece pallet.

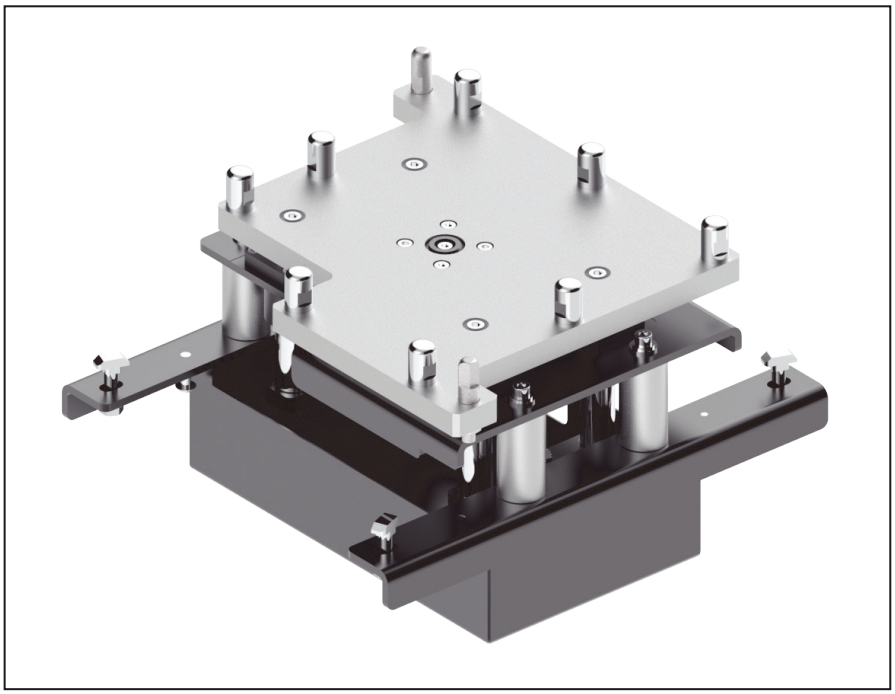

- Permitted maximum load: 30kg(Support customization)
- Repeat accuracy: ±0.1mm
- Lift height(above conveying level): 2.5mm(Support customization)
- Suitable for WA2 or WE2 workpiece pallet size ≤ 640x640mm

Delivery notes

Scope of delivery

Lift and locate unit
Protective housing
Throttle valve(ϕ6)
Magnetic switches: Two wires type
(No need to distinguish PNP or NPN)
*Note: Magnetic switches includes 500mm cable, without connector.
Assembly kit

Condition on delivery:

Fully assembled

Recommended accessories:

Stopper
Two-position five-way dual electronic control solenoid valve

PU - Dimensions

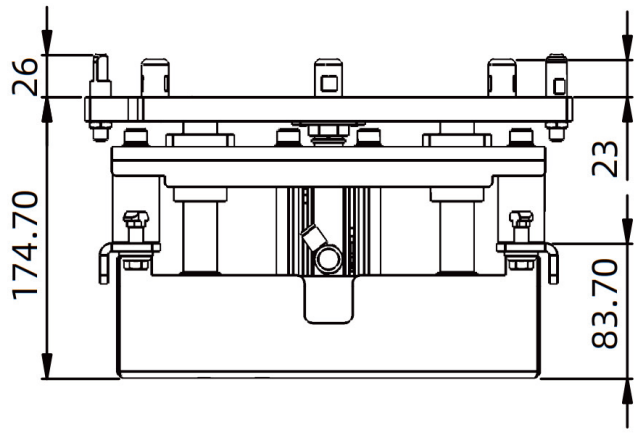

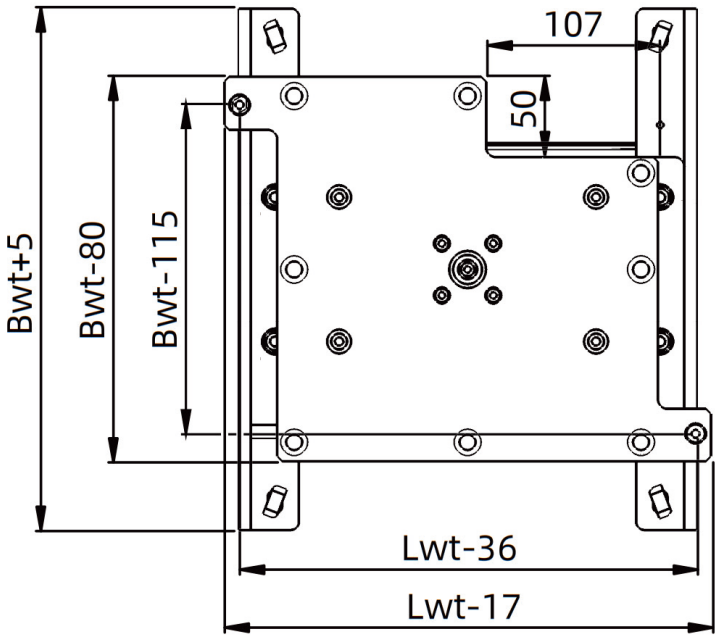

PU - Application

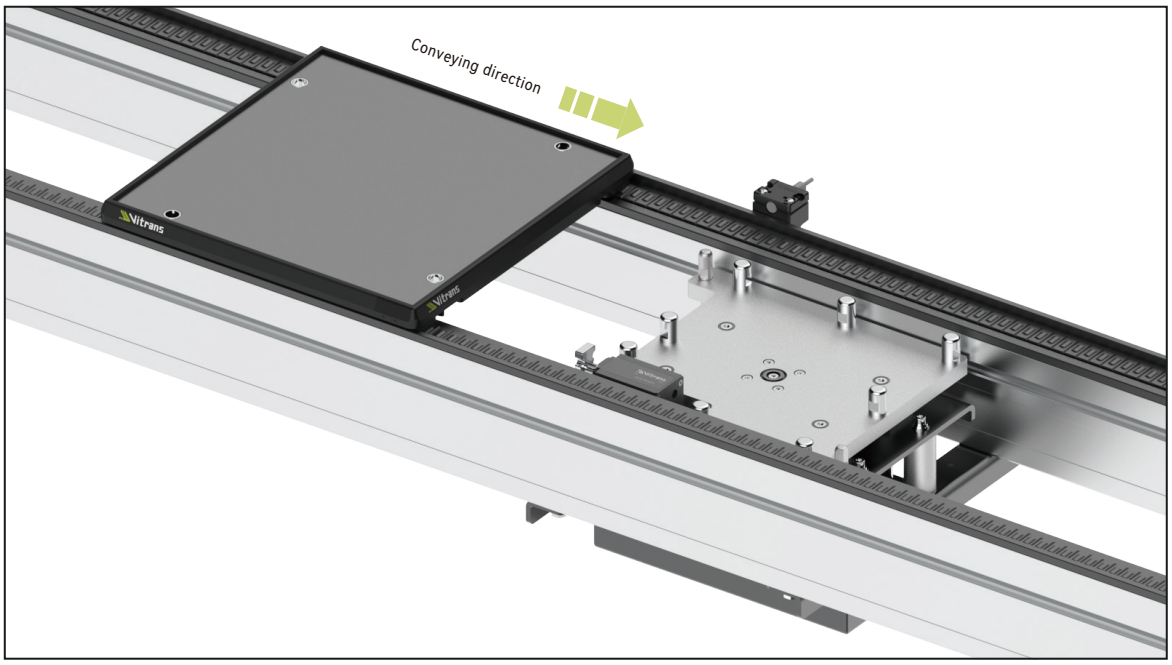

Technical data

Workpiece pallet width(mm)*	Bwt	160,240,320,400,480,560,640
Workpiece pallet length(mm)*	Lwt	160,240,320,400,480,560,640
Combination options(mm)	BwtxLwt	160 x 160、240、320
		240 x 160、240、320、400、480
		320 x 160、240、320、400、480、560、640
		400 x 240、320、400、480、560、640
		480 x 320、400、480、560、640
		560 x 320、400、480、560、640
		640 x 320、400、480、560、640
Permitted maximum load(kg)*		30
Cylinder bore diameter(mm)*		32 40 50
Adapted conveyor type*		BC2/AC2/PC2

Note 1: Lif cylinder bore diameter is designed according to the short edge length of workpiece pallet(Bwt or Lwt).
While short edge(Bwt or Lwt) length is less than 240mm, cylinder bore diameter is 32mm. While short edge(Bwt or Lwt) length is between 240mm to 320mm, cylinder bore diameter is 40mm. While short edge(Bwt or Lwt) length is more than 320mm(including 320mm), cylinder bore diameter is 50mm.
Note 2: While adapted conveyor type is BC2, lift and locate unit can also be used on FC2 conveyor.

Ordering information

PU	**Lift and locate unit:** PU
B ▢	**Workpiece pallet width:** 160 / 240 / 320 / 400 / 480 / 560 / 640 /customized
L ▢	**Workpiece pallet length:** 160 / 240 / 320 / 400 / 480 / 560 / 640 /customized
▢	**Adapted conveyor type:** BC2 / PC2 / AC2
▢	**Cylinder brand:** S
SP	**Special requirements:** a.Customized load b.Customized lift height

Note: While adapted conveyor type is BC2, lift and locate unit can also be used on FC2 conveyor.

Ordering example

PU—B320—L320—BC2—S

Lift and locate unit: PU	**Workpiece pallet width:** Bwt=320	**Workpiece pallet length:** Lwt=320	**Adapted conveyor type:** BC2
Cylinder brand: S	**Special requirements:** None		

PU-L Lift and locate unit

Lift and locate unit can lift the workpiece pallet up to leave the conveyor medium, and precisely locate the workpiece pallet.

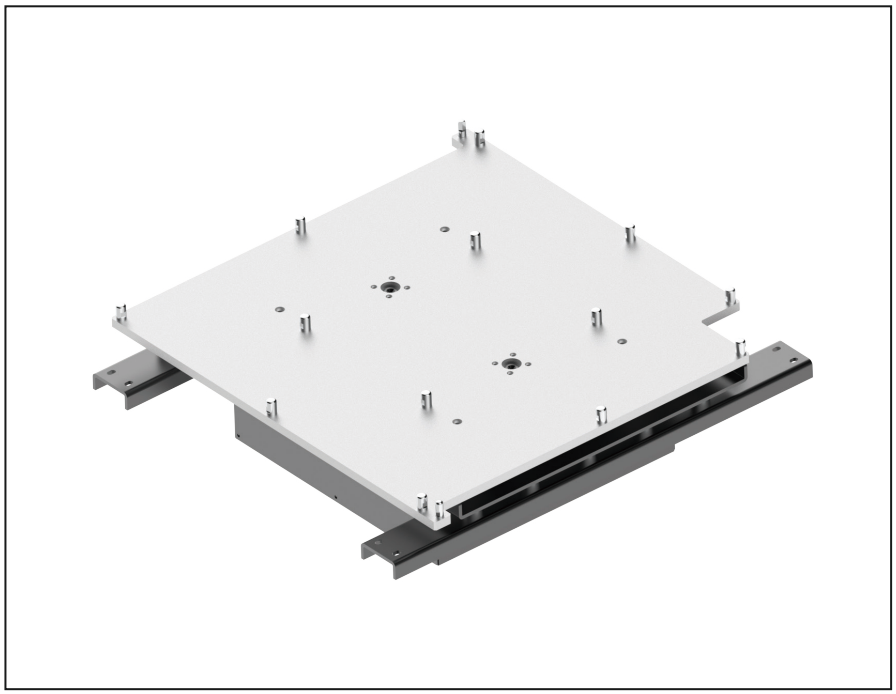

- Permitted maximum load: 50kg(Support customization)
- Repeat accuracy: ±0.1mm
- Lift height(above conveying level): 2.5mm(Support customization)
- Suitable for WA2 or WE2 workpiece pallet size > 640x640mm

Delivery notes

Scope of delivery:

Lift and locate unit
Protective housing
Throttle valve(ϕ6)
Magnetic switches: Two wires type
(No need to distinguish PNP or NPN)
*Note: Magnetic switches includes 500mm cable, without connector.
Assembly kit

Condition on delivery:

Fully assembled

Recommended accessories:

Stopper
Two-position five-way dual electronic control solenoid valve

PU-L - Dimensions

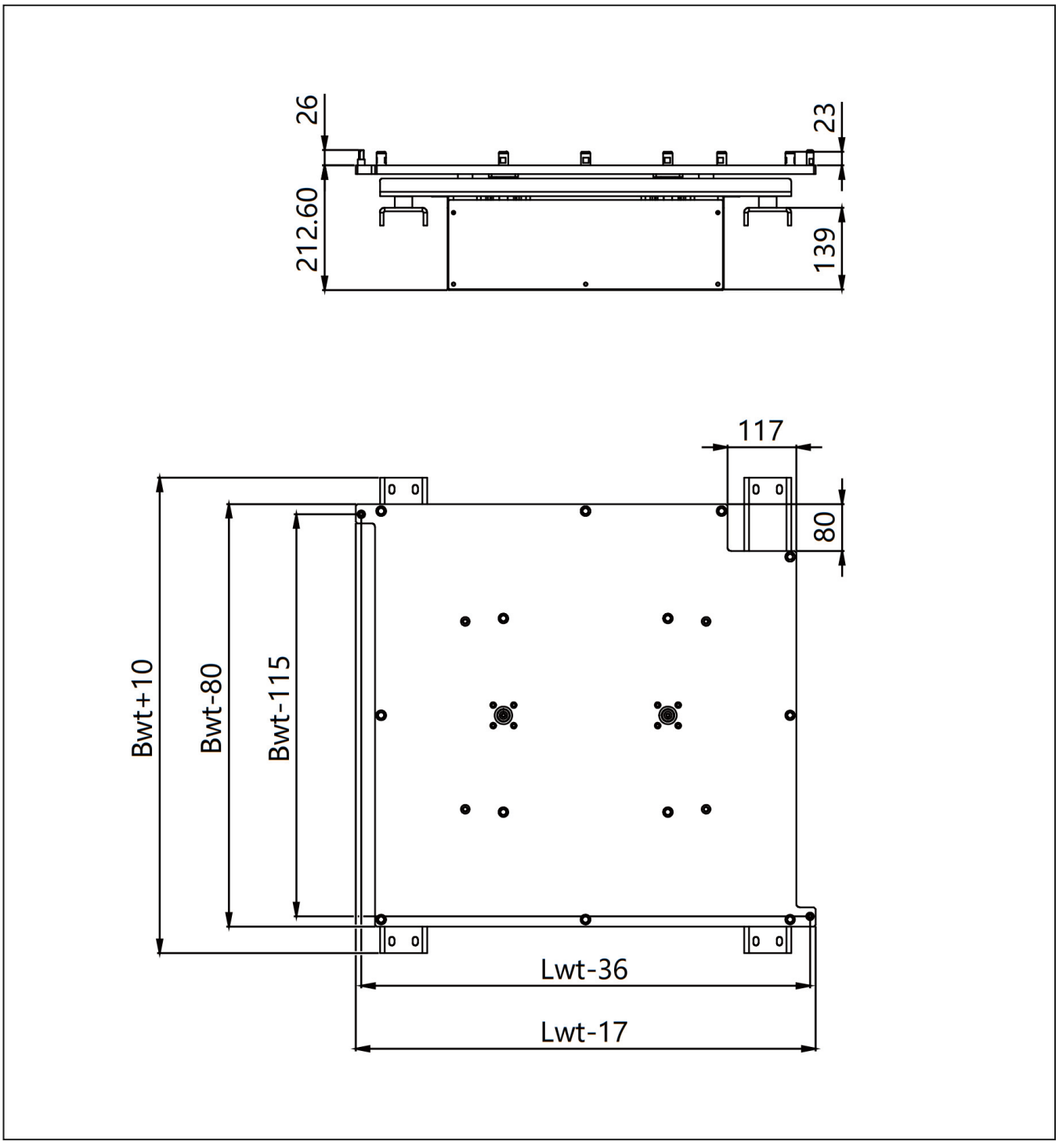

PU-L - Application

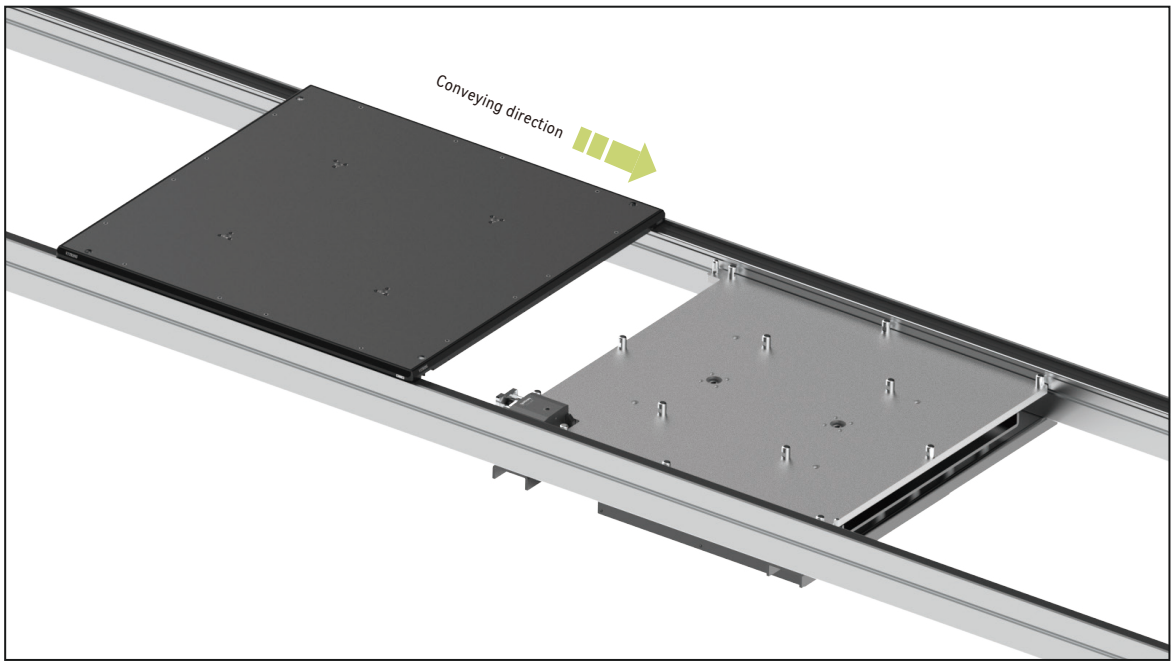

Technical data

Workpiece pallet width(mm)*	Bwt	640,720,800,1040,1200
Workpiece pallet length(mm)*	Lwt	640,720,800,1040,1200
Combination options(mm)	BwtxLwt	640 x 640、720、800、1040、1200
		720 x 640、720、800、1040、1200
		800 x 640、720、800、1040、1200
		1040 x720、800、1040、1200
		1200 x 800、1040、1200
Permitted maximum load(kg)*		50
Cylinder bore diameter(mm)*		63
Adapted conveyor type*		BC2/AC2/PC2

Note: While adapted conveyor type is BC2, lift and locate unit can also be used on FC2 conveyor.

Ordering information

PU-L	**Lift and locate unit:** PU-L
B ☐	**Workpiece pallet width:** 640 / 720 / 800 / 1040 / 1200
L ☐	**Workpiece pallet length:** 640 / 720 / 800 / 1040 / 1200
☐	**Adapted conveyor type:** BC2 / AC2 / PC2
☐	**Cylinder brand:** S
SP	**Special requirements:** a.Customized load b.Customized lift height

Note: While adapted conveyor type is BC2, lift and locate unit can also be used on FC2 conveyor.

Ordering example

PU-L—B800—L800—AC2—S

Lift and locate unit: PU-L	**Workpiece pallet width:** Bwt=800	**Workpiece pallet length:** Lwt=800	**Adapted conveyor type:** AC2
Cylinder brand: S	**Special requirements:** None		

05

Lift and transfer unit

Lift and transfer unit is used to change the workpiece pallet direction of transport. They are used to create a branch in the workpiece pallet paths to the individual processing stations. The orientation of the workpiece pallet relative to its conveying direction changes when it is moved from longitudinal conveying to transverse conveying and vice versa.

ET2/S––Lift and transfer unit

ET2/B––Lift and transfer unit

ET2/C––Lift and transfer unit

EG––Roller section

ET2/S Lift and transfer unit

ET2/S Lift and transfer unit has three lift positions. In the center position, the workpiece pallets are stopped by the guide profile of the lift and transfer unit.

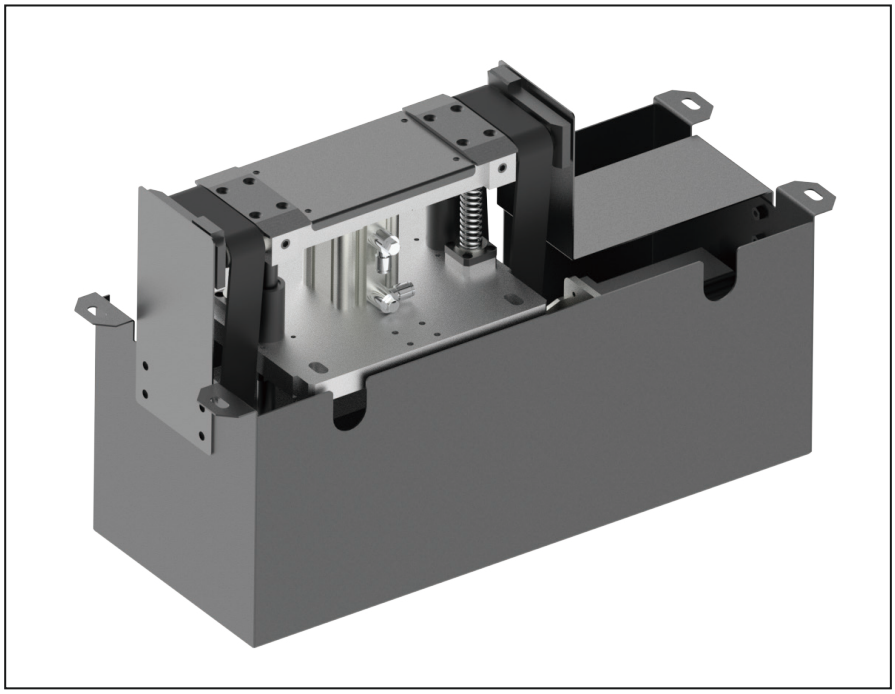

Delivery notes

Scope of delivery:

Lift and transfer unit
Stepper motor(Including I/O type stepper drive)
Protective housing
Throttle valve(ϕ6)
Magnetic switches: Two wires type
(No need to distinguish PNP or NPN)
*Note: Magnetic switches includes 500mm cable, without connector.

Condition on delivery:

Fully assembled

Recommended accessories:

Damper or Rocker
Three-position five-way medium release solenoid valve(Necessary)

- Reversible operation possible
- Suitable for WA2 and WE2 workpiece pallet
- Suitable for workpiece pallet size 160×160mm, 240×160mm, 320×160mm

ET2/S - Dimensions

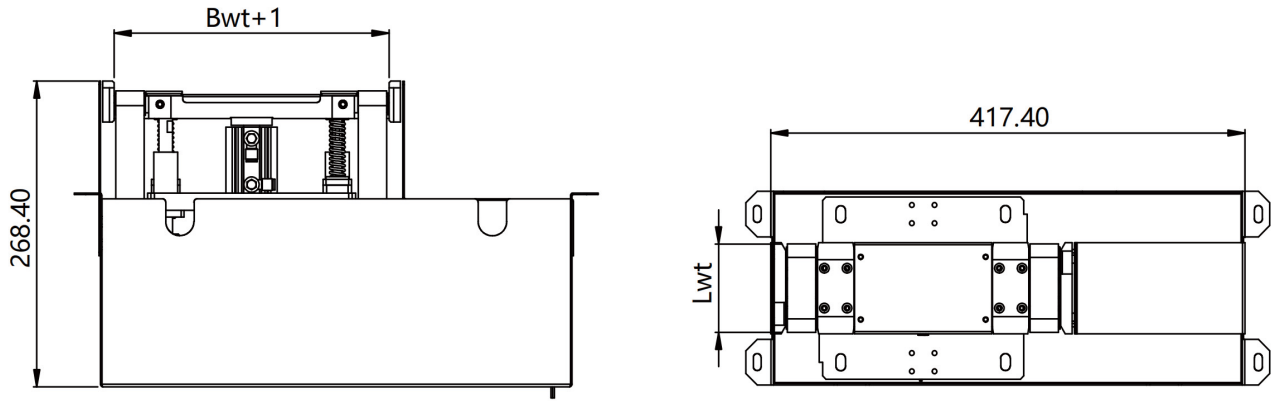

Application case

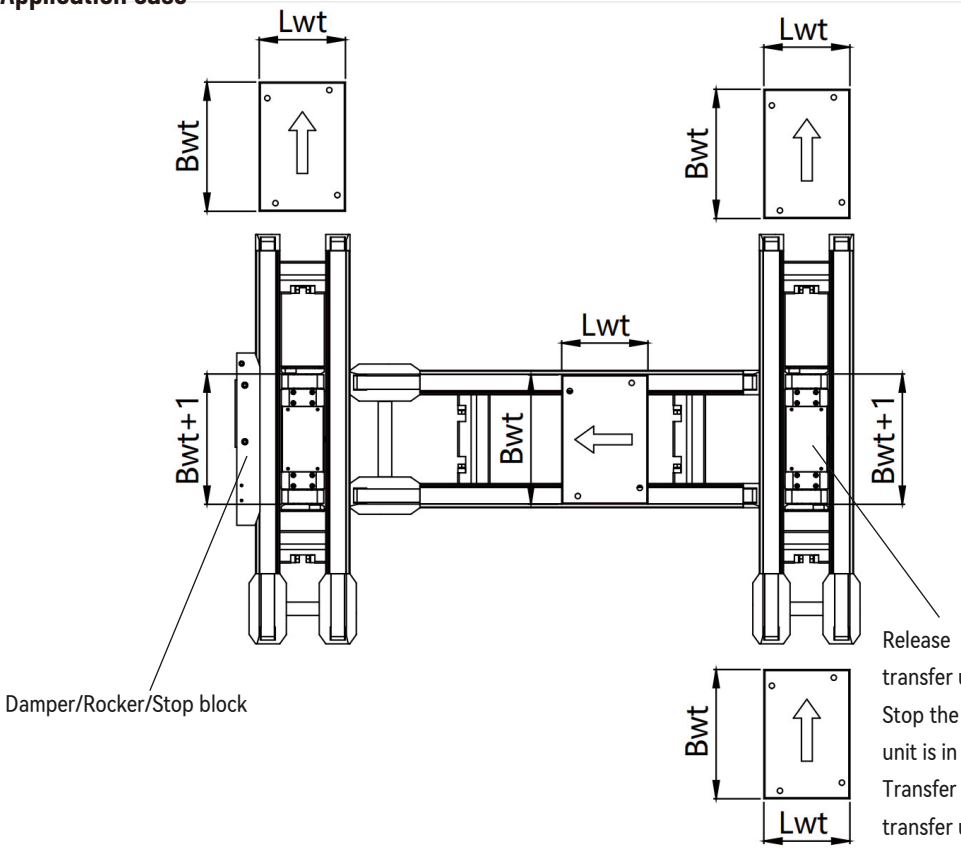

Release the workpiece pallet while lift and transfer unit is in bottom position.

Stop the workpiece pallet while lift and transfer unit is in center position.

Transfer the workpiece pallet while lift and transfer unit is in top position.

ET2/S - Application

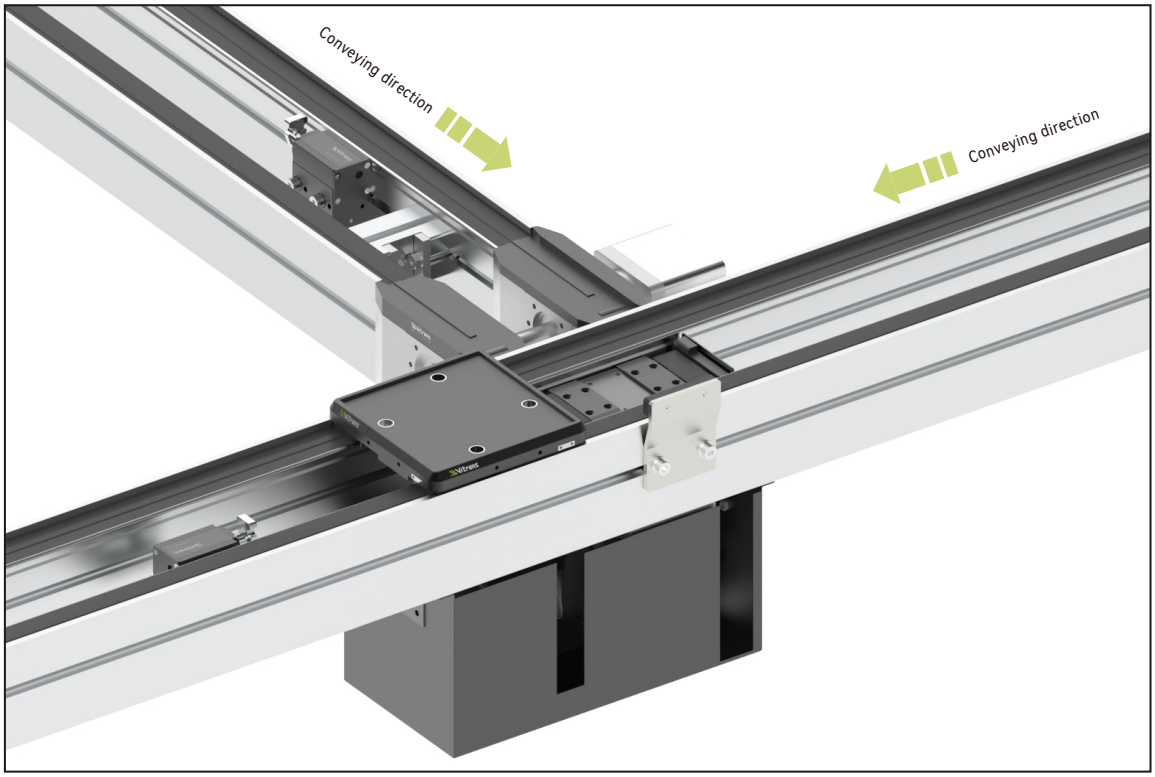

Technical data

Conveyor medium*		Timing belt
Workpiece pallet width(mm)*	Bwt	160,240,320
Workpiece pallet length(mm)*	Lwt	160
Combination options(mm)	BwtxLwt	160 x 160
		240 x 160
		320 x 160
Lift cylinder bore diameter(mm)*		32
Motor type*		Stepper motor
Motor output torque(N·m)*		9.4
Stepper drive*		I/O Type
Working voltage*	U	48V DC
Rated current*		3.8A
Permitted maximum load*		30kg
Lift height*		10mm

Ordering information

ET2/S	**Lift and transfer type:** ET2/S
B ▢	**Workpiece pallet width:** 160 / 240 / 320
L ▢	**Workpiece pallet length:** 160
▢	**Adapted conveyor type:** BC2 / PC2 / AC2
▢	**Motor type:** MZ(Default brand)
▢	**Cylinder brand:** S
SP	**Special requirements:** a.Special workpiece pallet size

Note：While adapted conveyor type is BC2, lift and transfer unit can also be used on FC2 conveyor.

Ordering example

ET2/S—B160—L160—BC2—MZ—S

Lift and transfer type: ET2/S	**Workpiece pallet width:** Bwt=160	**Workpiece pallet length:** Lwt=160	**Adapted conveyor type:** BC2
Motor type: MZ	**Cylinder brand:** S	**Special requirements:** None	

ET2/B Lift and transfer unit

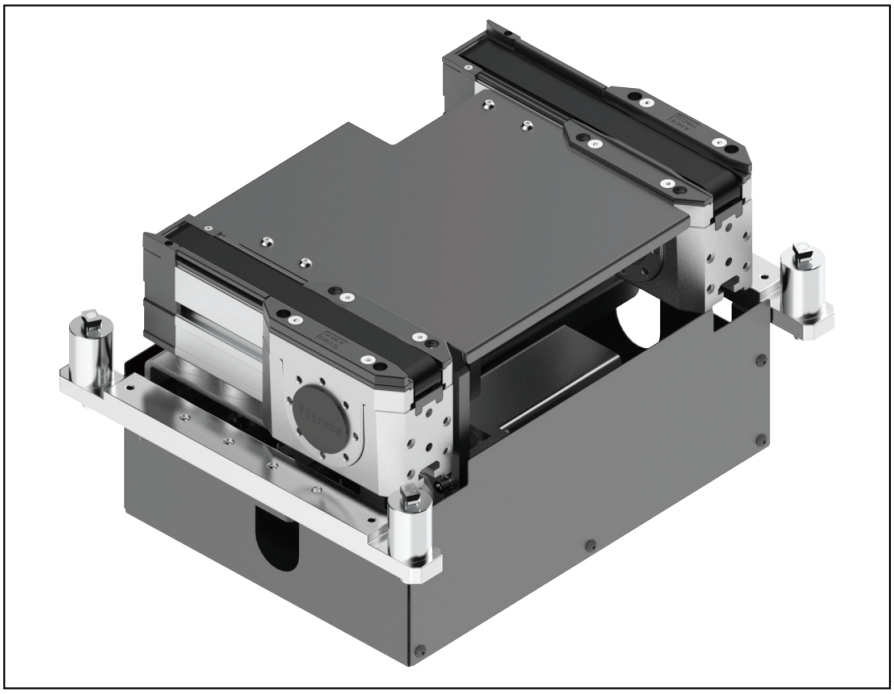

- Reversible operation possible
- Compact design with built-in stepper motor
- Suitable for WA2 and WE2 workpiece pallet
- Suitable for workpiece pallet length Lwt which is not less than 240mm.
- ET2/B lift and transfer unit cannot stop pallet, it must be used with stopper.
- Permitted maximum load: 30kg; permitted maximum surface load: 1 kg/cm

Delivery notes

Scope of delivery

Lift and transfer unit

Stepper motor(Including I/O type stepper drive)

Protective housing

Throttle valve(ϕ6)

Magnetic switches: Two wires type

(No need to distinguish PNP or NPN)

*Note: Magnetic switches includes 500mm cable, without connector.

Condition on delivery:

Fully assembled

Recommended accessories:

Stop block

Rocker

Damper

Dampened stopper

Proximity sensor bracket

Roller section

Two-position five-way dual electronic control solenoid valve

ET2/B - Dimensions

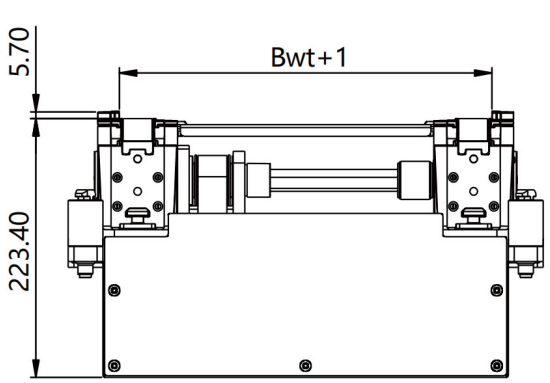

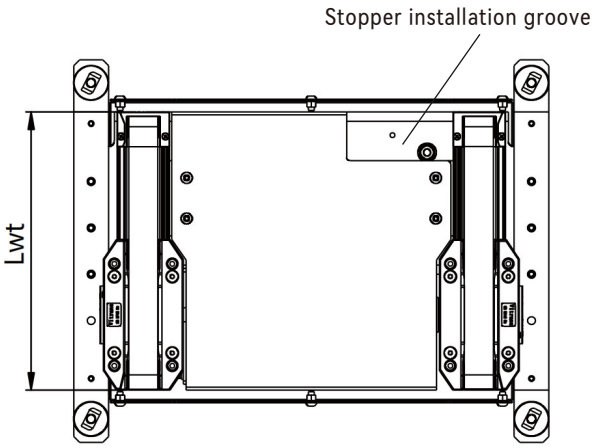

Application case

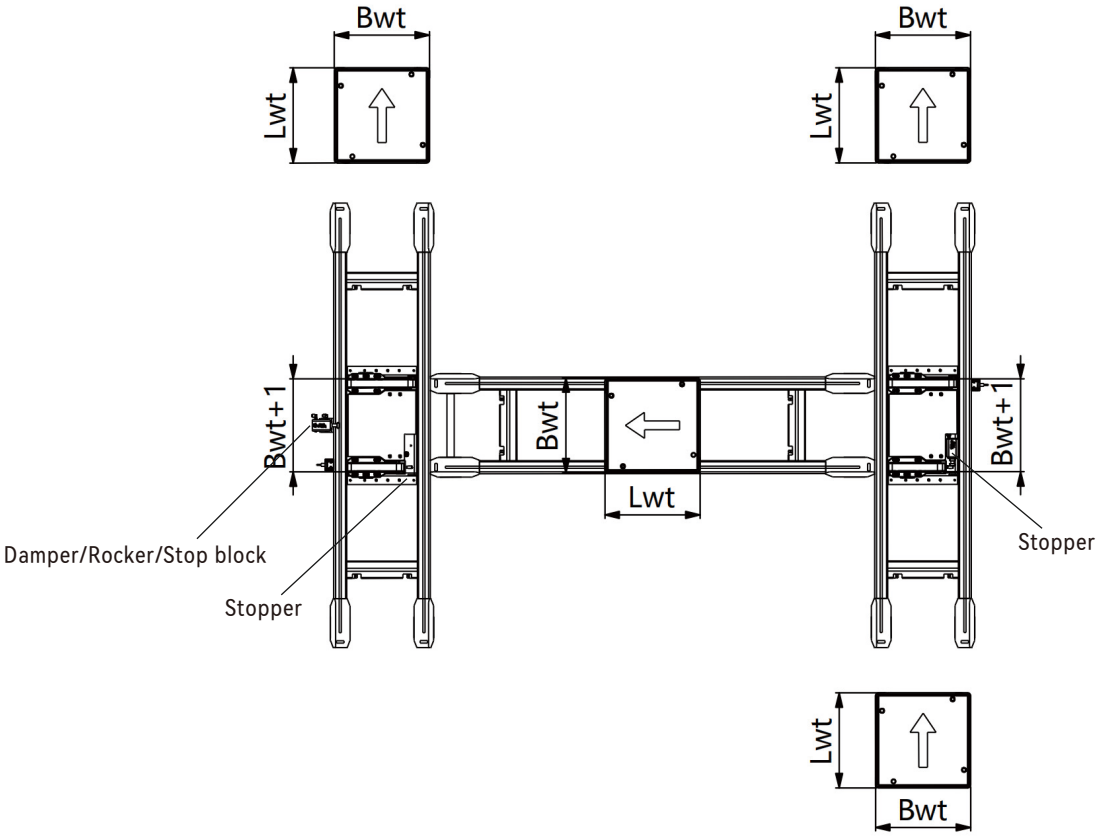

ET2/B - Application

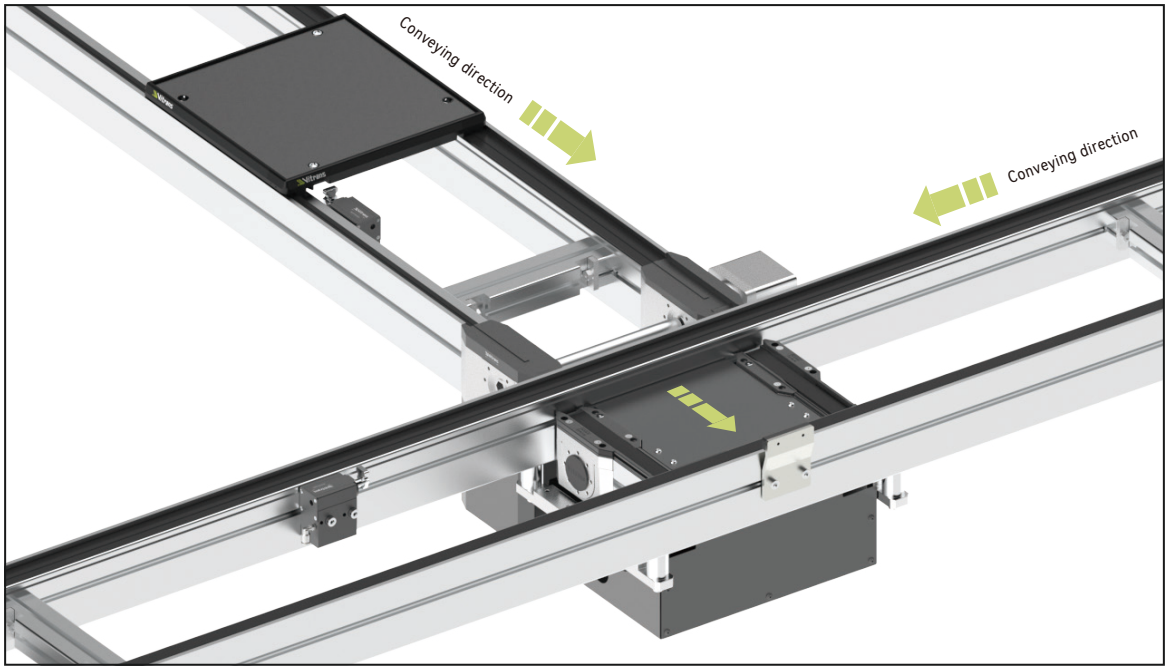

Technical data

Conveyor medium*		Timing belt
Workpiece pallet width(mm)*	Bwt	160,240,320,400,480,560,640
Workpiece pallet length(mm)*	Lwt	240,320,400,480,560,640
Combination options(mm)	BwtxLwt	160 x 240、320
		240 x 240、320、400、480
		320 x 240、320、400、480、560、640
		400 x 240、320、400、480、560、640
		480 x 240、320、400、480、560、640
		560 x 320、400、480、560、640
		640 x 320、400、480、560、640
Lift cylinder bore diameter(mm)*		40 50
Motor type*		Stepper motor
Stepper drive*		I/O Type
Working voltage*	U	48V DC
Rated current*		3.8A
Permitted maximum load*		30kg
Lift height*		10mm

Note: Lift cylinder bore diameter is designed according to workpiece pallet length Lwt. While Lwt > 240mm, cylinder bore diameter is 50mm.

Ordering information

ET2/B	**Lift and transfer type:** ET2/B
B ☐	**Workpiece pallet width:** 160 / 240 / 320 / 400 / 480 / 560 / 640
L ☐	**Workpiece pallet length:** 240 / 320 / 400 / 480 / 560 / 640
☐	**Adapted conveyor type:** BC2 / PC2 / AC2
☐	**Motor type:** MZ(Default brand)
☐	**Cylinder brand:** S
SP	**Special requirements:** a.Customized load b.Special workpiece pallet size

Note: While adapted conveyor type is BC2, lift and transfer unit can also be used on FC2 conveyor.

Ordering example

ET2/B—B320—L320—BC2—MZ—S

Lift and transfer type: ET2/B	**Workpiece pallet width:** Bwt=320	**Workpiece pallet length:** Lwt=320	**Adapted conveyor type:** BC2
Motor type: MZ	**Cylinder brand:** S	**Special requirements:** None	

ET2/C Lift and transfer unit

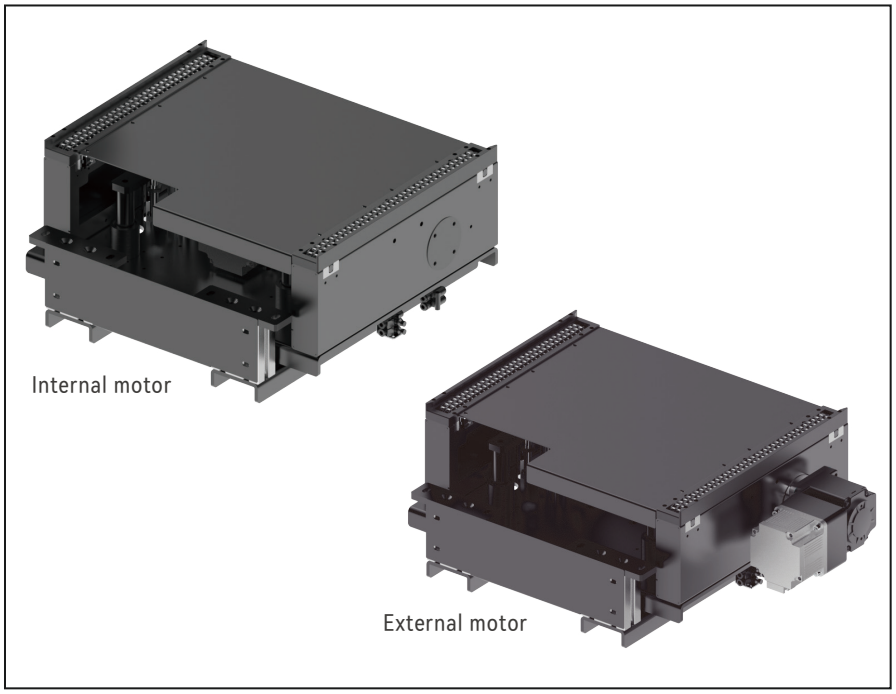

- Reversible operation possible
- Compact and modular design
- Suitable for WA2 and WE2 workpiece pallet
- Suitable for workpiece pallet length Lwt which is not less than 240mm.
- ET2/C lift and transfer unit cannot stop pallet, it must be used with stopper.

Delivery notes

Scope of delivery:

Lift and transfer unit
Brushless motor(Including I/O type drive)
Protective housing
Throttle valve(ϕ6)
Magnetic switches: Two wires type
(No need to distinguish PNP or NPN)
*Note: Magnetic switches includes 500mm cable, without connector.

Condition on delivery:

Fully assembled

Recommended accessories:

Stop block
Rocker
Damper
Dampened stopper
Two-position five-way dual electronic control solenoid valve

ET2/C（Internal motor） - Dimensions

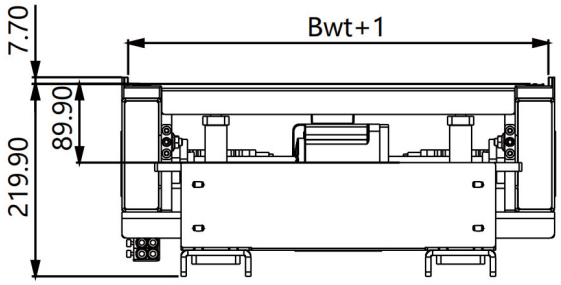

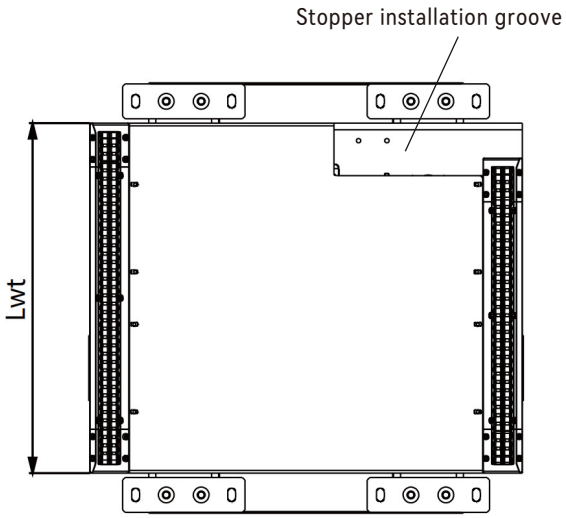

Application case

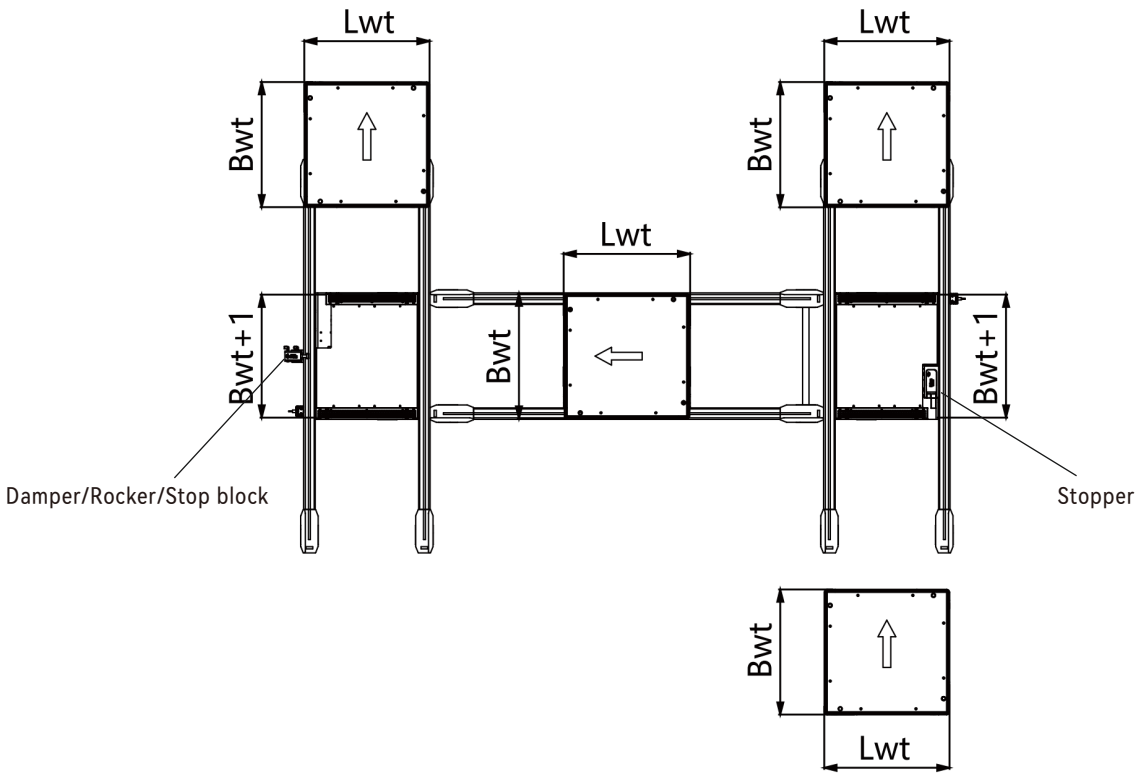

ET2/C（External motor） - Dimensions

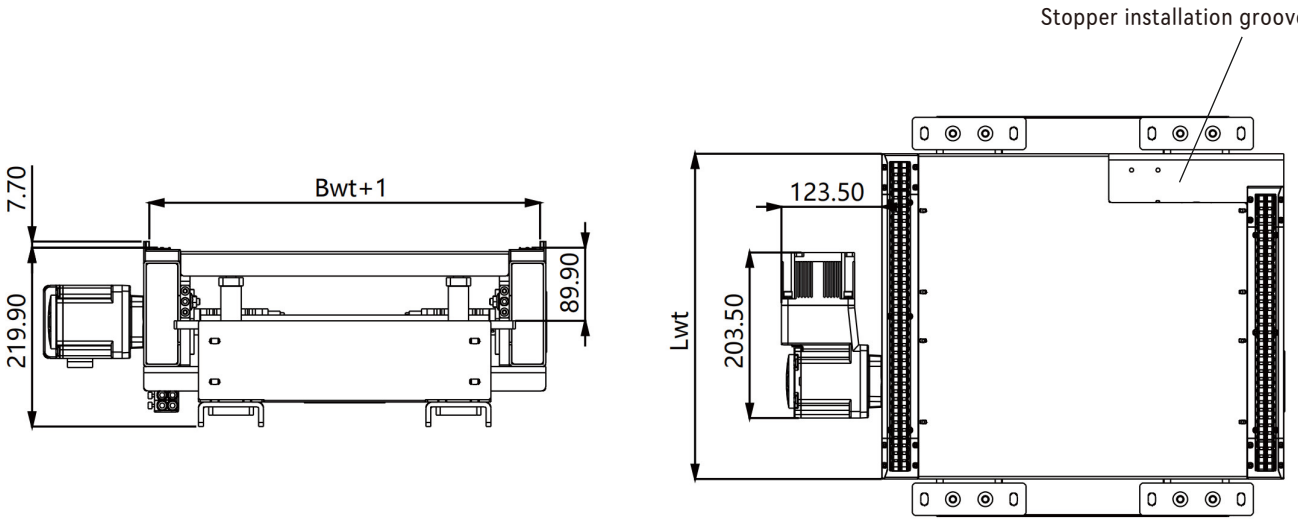

Application case

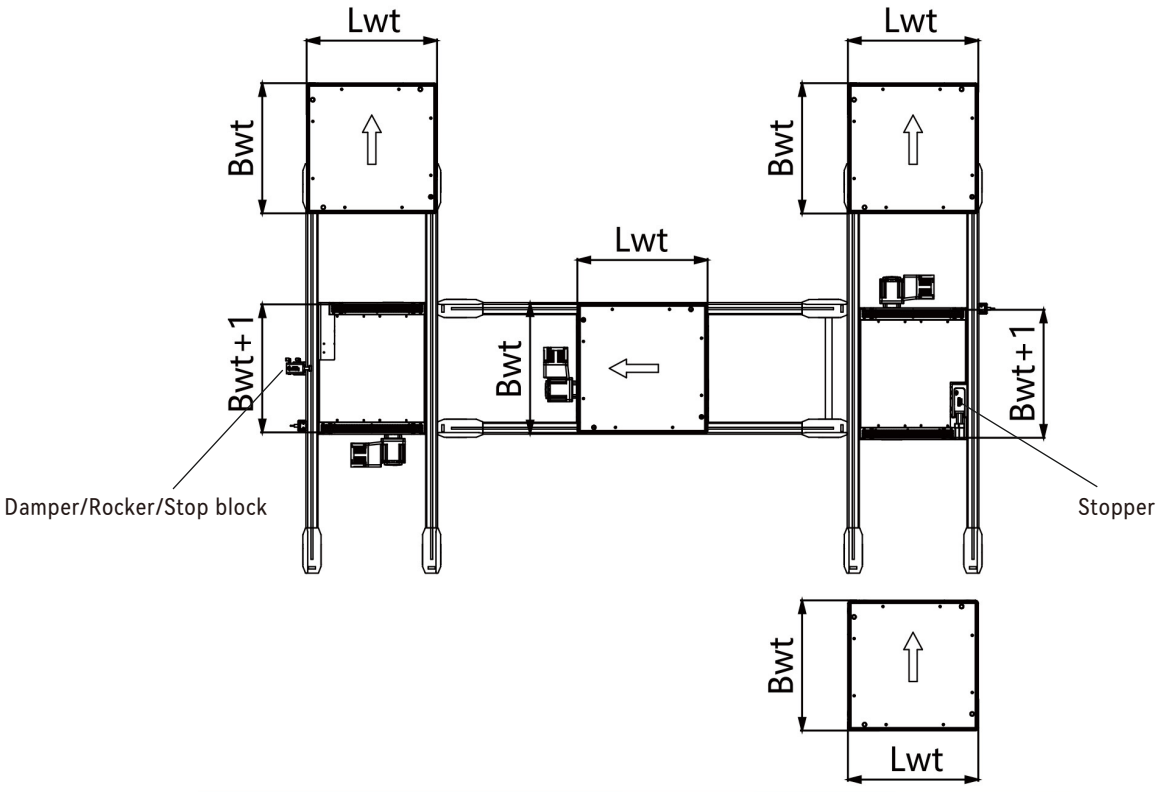

ET2/C - Application

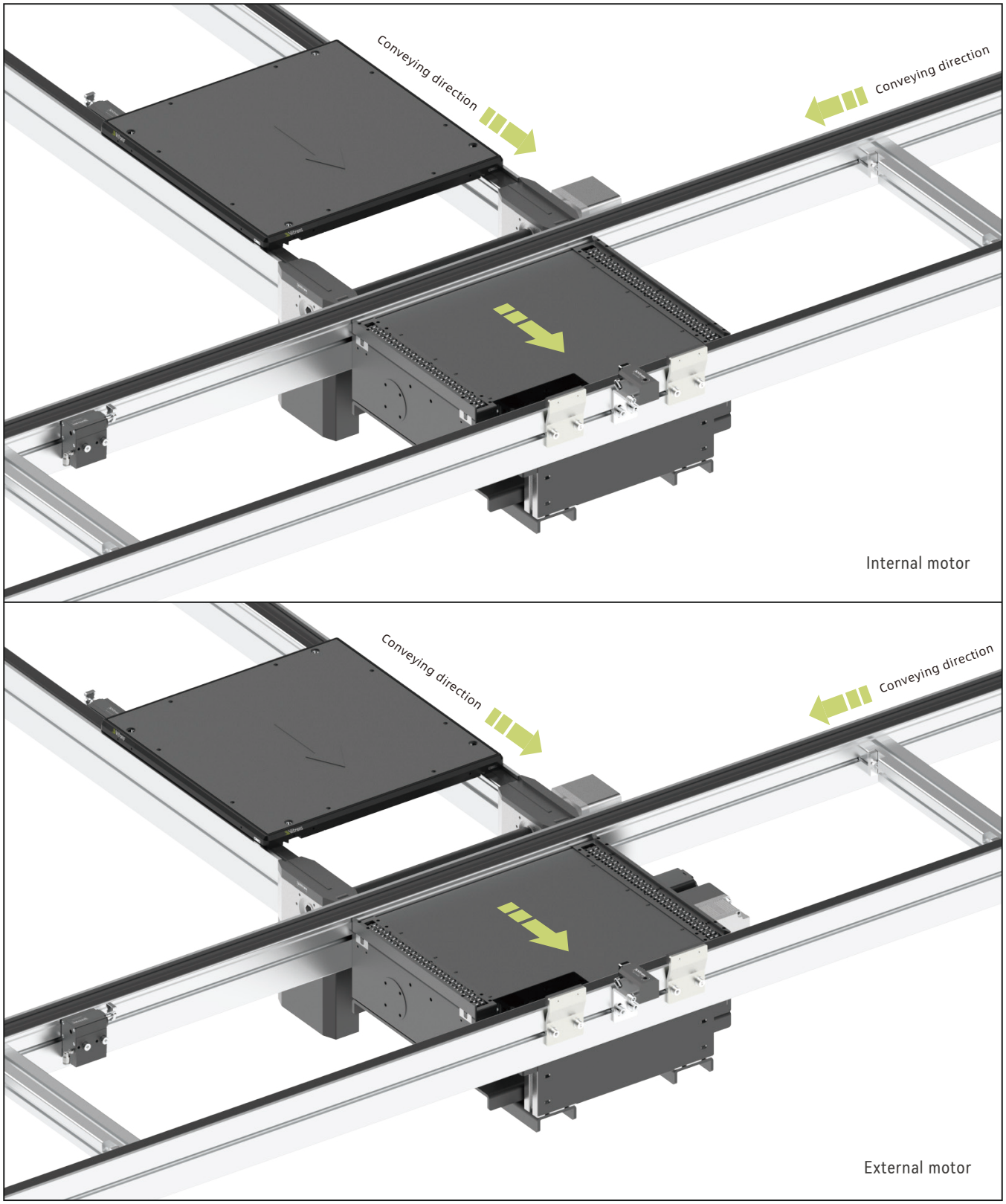

Technical data

Conveyor medium*		Double Chain
Workpiece pallet width(mm)*	Bwt	320,400,480,560,640,700,800,1040,1200
Workpiece pallet length(mm)*	Lwt	320,400,480,560,640,700,800,1040,1200
Combination options(mm)	BwtxLwt	320 x 320、400、480、560、640
		400 x 320、400、480、560、640、720、800
		480 x 320、400、480、560、640、720、800
		480 x 320、400、480、560、640、720、800
		560 x 320、400、480、560、640、720、800
		640 x 320、400、480、560、640、720、800
		720 x 400、480、560、640、720、800
		800 x 400、480、560、640、720、800
Lift cylinder bore diameter(mm)*		63
Permitted maximum load*		120kg
Motor type*		Brushless motor(Including I/O type drive)
Motor mounting location*		R(External), M(Internal)
Working voltage*	U	220AC(Single phase)
Working frequency*	f	50HZ
Motor connection*	AT	Terminal box
Permitted maximum surface load*		2kg/cm
Lift height*		10mm

Note 1: Motor can only be mounted external while workpiece pallet width Bwt ≤ 400mm.

Note 2: ET2/C lift and transfer unit uses two pieces cylinders for lifting. When workpiece pallet size(Bwt or Lwt) is over 800mm, Four pieces cylinders should be used.

Ordering information

ET2/C	**Lift and transfer type:** ET2/C
B ▢	**Workpiece pallet width:** 320 / 400 / 480 / 560 / 640 / 700 / 800 / 1040 / 1200
L ▢	**Workpiece pallet length:** 320 / 400 / 480 / 560 / 640 / 700 / 800 / 1040 / 1200
▢	**Adapted conveyor type:** AC2
▢	**Motor type:** TBWS012SV22(Default brand)
▢	**Motor mounting location:** R(External), M(Internal)
▢	**Cylinder brand:** S
SP	**Special requirements:** a.Working voltage b.Working frequency c.Customized load d.Motor connection

Ordering example

ET2/C—B480—L480—AC2—TBWS012SV22—R—S

Lift and transfer type: ET2/C	**Workpiece pallet width:** Bwt=480	**Workpiece pallet length:** Lwt=480	**Adapted conveyor type:** AC2
Motor type: TBWS012SV22	**Motor mounting location:** R(External)	**Cylinder brand:** S	**Special requirements:** None

EG Roller section

Roller section can hold and conveying workpiece pallet between two longitudinal conveyors with lift and transfer units.

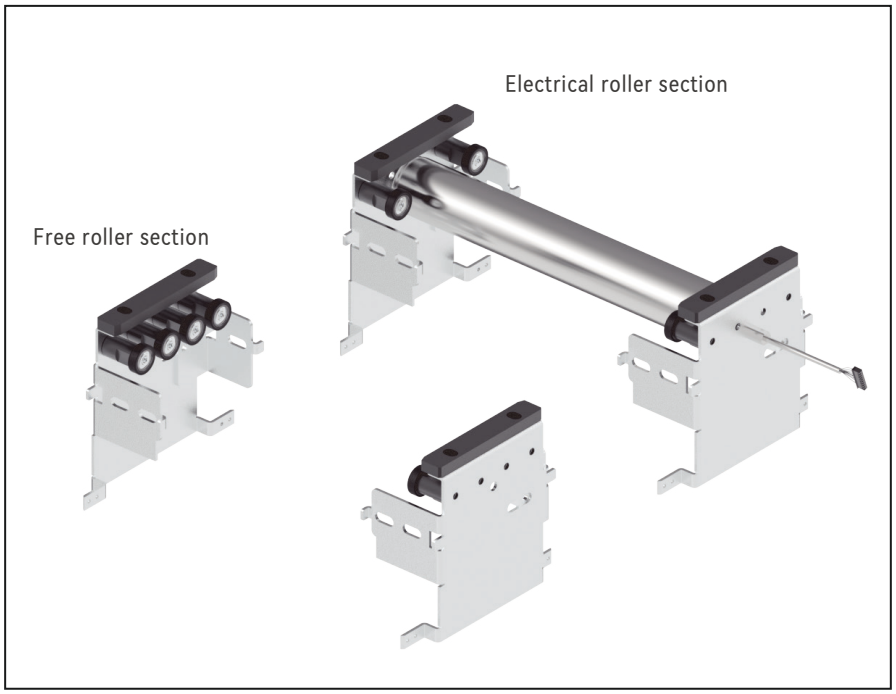

Delivery notes

Scope of delivery:

Roller section

Assembly kit

Condition on delivery:

Fully assembled

- Reversible operation possible
- Suitable for WA2 and WE2 workpiece pallet
- Free roller section length options: 45mm, 90mm, 135mm or other customized length
- Electrical roller section length: Customized
- While the conveying distance is less than 1/3 workpiece pallet length, free roller section can be used. Otherwise, a electrical roller section should be used.

Note: A PNP type drive card is included in the electrical roller section.

Free roller section - Dimensions

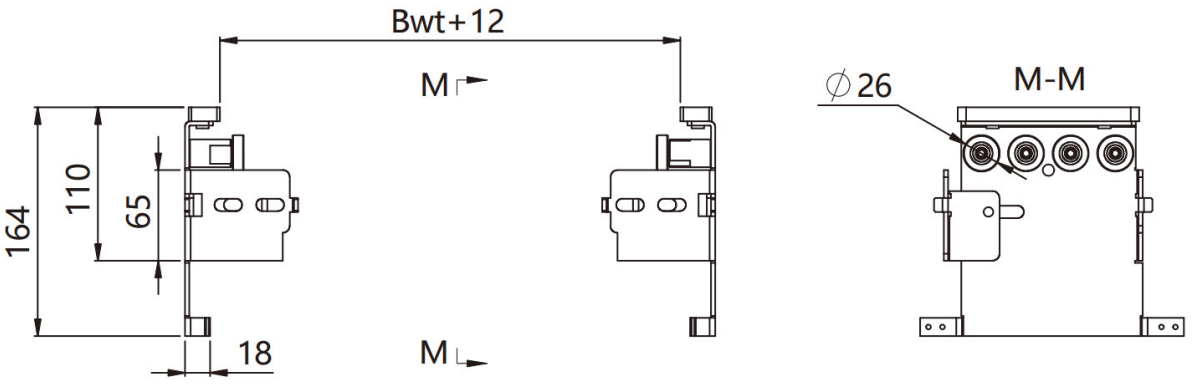

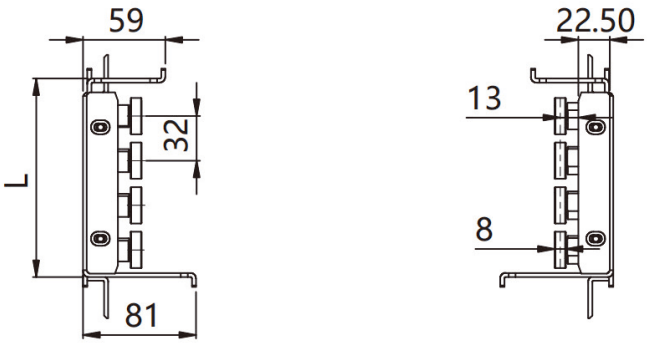

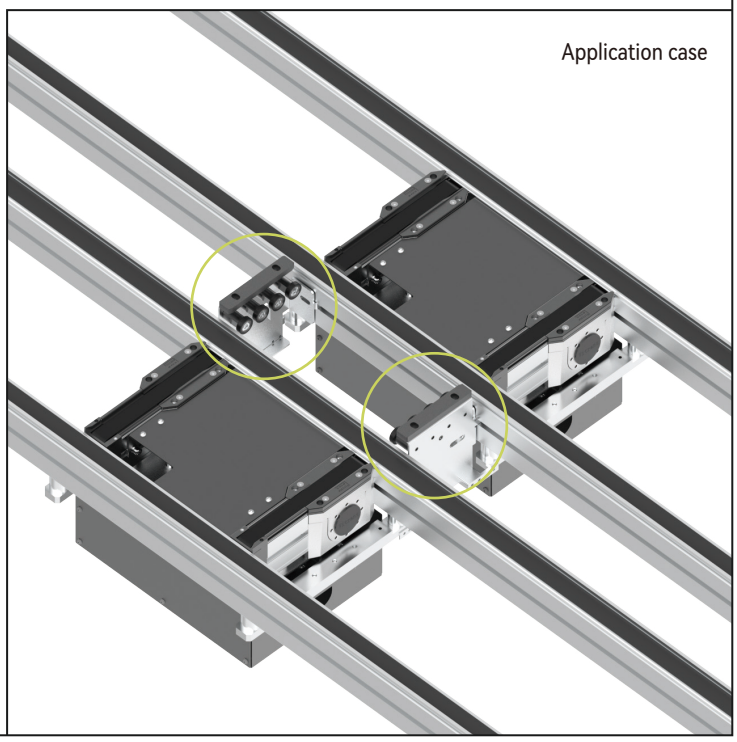

Electrical roller section - Dimensions

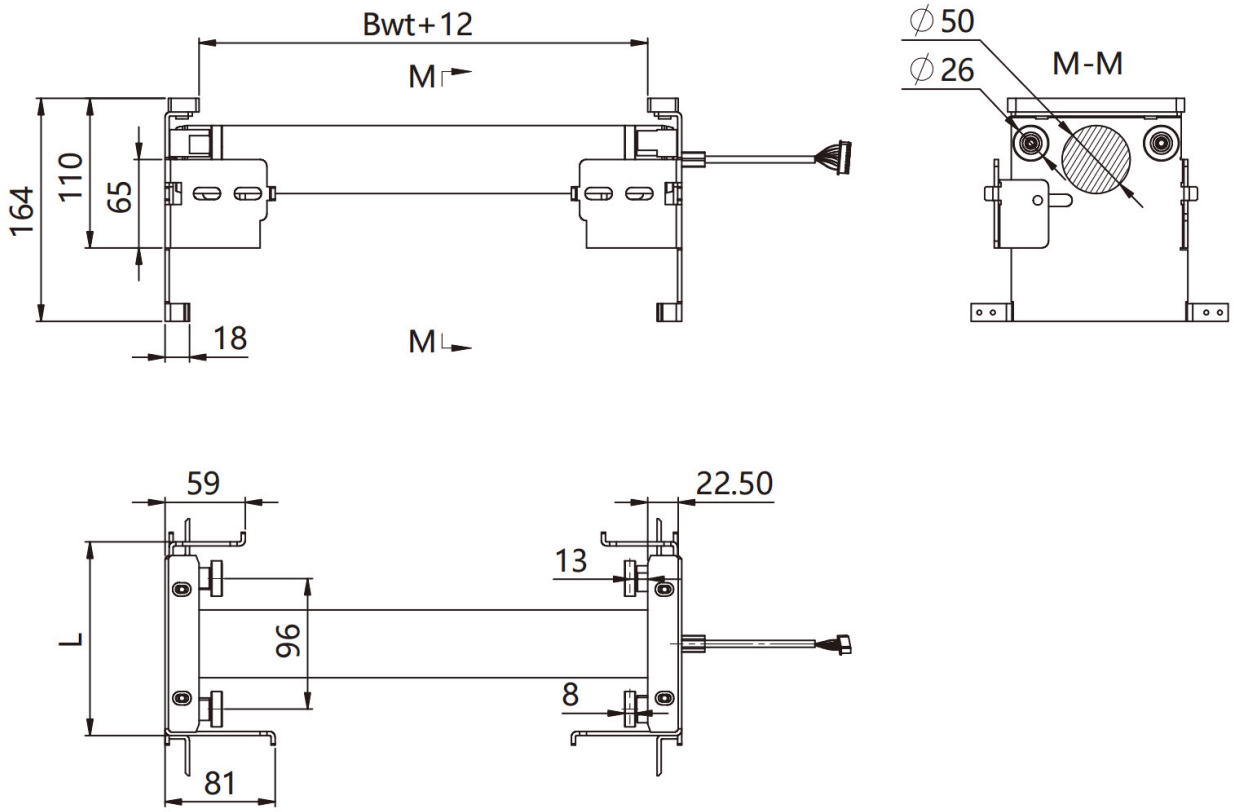

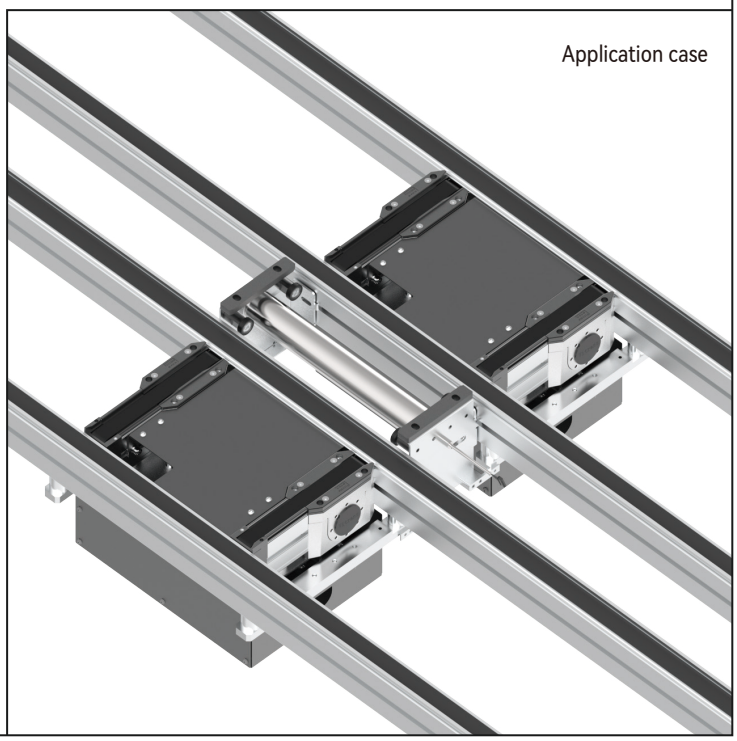

Technical data

Conveyor medium*		Roller
Workpiece pallet width(mm)*	Bwt	160,240,320,400,480,560,640,800,1040,1200
Workpiece pallet length(mm)*	Lwt	160,240,320,400,480,560,640,800,1040,1200
Permitted maximum load*		30KG
Speed*		Adjustable range 3-20m/min(Electrical roller section)
Working voltage*	U	24VDC,48VDC(Electrical roller section)

Note: To use electrical roller section, the conveying distance L should longer than 60mm.
And the workpiece pallet width Bwt should not be less than 240mm.

Ordering information

EG	**Roller section:** EG
B ▢	**Workpiece pallet width:** 160 / 240 / 320 / 400 / 480 / 560 / 640 / 800 / 1040 / 1200
L ▢	**Conveying distance:** 45 / 90 / 135 / Customized
▢	**Type:** N(Free roller) / DM(Electrical roller)
SP	**Special requirements:** a.Conveying medium b.Customized load

Ordering example

EG—B240—L90—N

Roller section: EG	**Workpiece pallet width:** Bwt=240	**Conveying distance:** L=90	**Type:** N	**Special requirements:** None

06

Lift and rotate unit

Lift and rotate unit turns workpiece pallets to the required orientation.

PR—Lift and rotate unit

PR-L—Lift and rotate unit

PR Lift and rotate unit

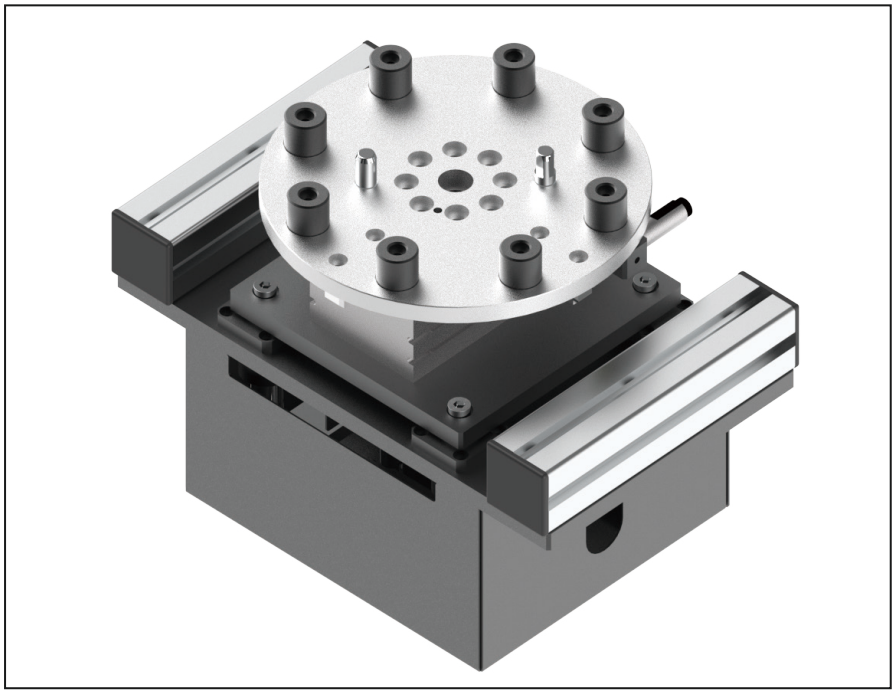

Delivery notes

Scope of delivery:

Lift and rotate unit

Protective housing

Assembly kit

Throttle valve(ϕ6)

Magnetic switches: Two wires type

(No need to distinguish PNP or NPN)

*Note: Magnetic switches includes 500mm cable, without connector.

Condition on delivery:

Fully assembled

Recommended accessories:

Stopper

Two-position five-way dual electronic control solenoid valve

- For rotating workpiece pallets 90° or 180°
- Suitable for application with requirement for workpiece pallet orientation
- Suitable for 640mm×640mm or smaller WA2 and WE2 workpiece pallet
- Lift height (above conveying medium): 25mm
- Extra bushings(4pcs) need to be added on workpiece pallet to fit with the lift and rotate unit.
- Pneumatic mechanism
- Support customization

PR - Dimensions

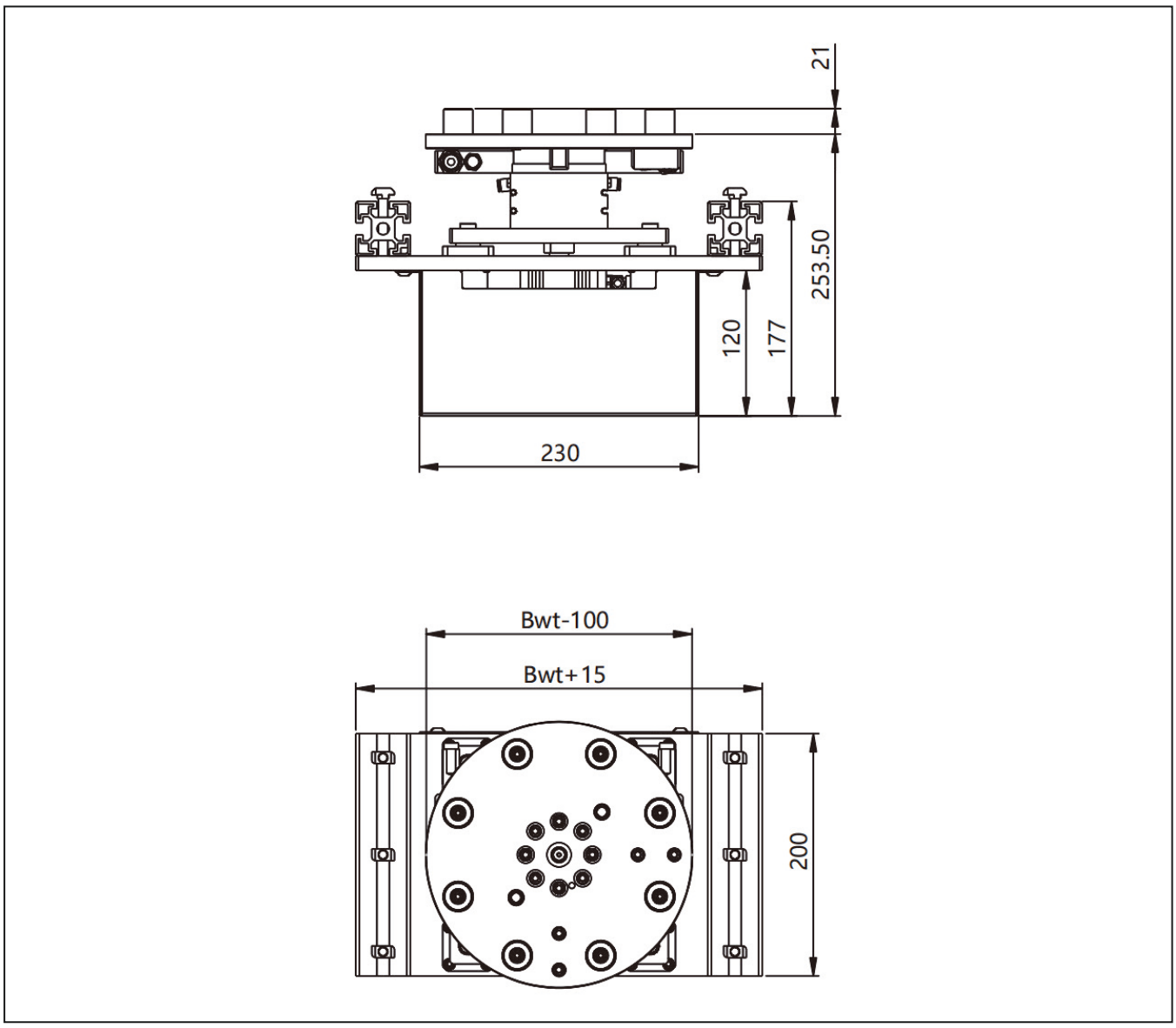

PR - Application

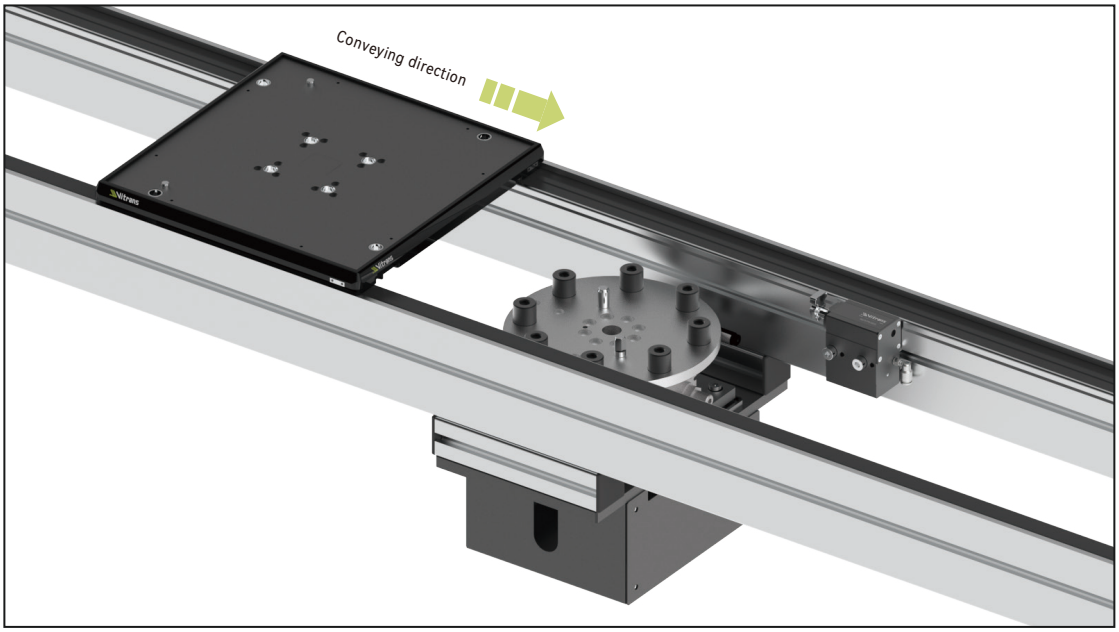

The workpiece pallet in the picture is with 4pcs extra bushings.

Technical data

Workpiece pallet width(mm)*	Bwt	160,240,320,400,480,640
Workpiece pallet length(mm)*	Lwt	160,240,320,400,480,640
Combination options(mm)	Bwt x Lwt	160 x 160、240、320
		240 x 160、240、320、400、480
		320 x 160、240、320、400、480、560
		400 x 240、320、400、480、560、640
		480 x 320、400、480、560、640
		560 x 320、400、480、560、640
		640 x 640、400、480、560、640
Permitted maximum load(kg)*		30
Lift cylinder bore diameter(mm)*		40 50
Rotate cylinder bore diameter(mm)*		50
Adapted conveyor type*		BC2/AC2/PC2
Rotate angle*		90°、180°

Note 1: While workpiece pallet size Bwt is 160mm or Lwt is less than 240mm， lift cylinder bore diameter is 40mm.
While workpiece pallet length Lwt is over 240mm, lift cylinder diameter is 50mm.
Note 2: While adapted conveyor type is BC2, lift and rotate unit can also be used on FC2 conveyor.

Ordering information

PR	**Lift and rotate unit:** PR
B ▢	**Workpiece pallet width:** 160 / 240 / 320 / 400 / 480 / 640
L ▢	**Workpiece pallet length:** 160 / 240 / 320 / 400 / 480 / 640
▢	**Rotate angle:** 90° / 180°
▢	**Adapted conveyor type:** BC2 / PC2 / AC2
▢	**Cylinder brand:** S
SP	**Special requirements:** a.Customized load b.Customized rotate angle

Note: While adapted conveyor type is BC2, lift and rotate unit can also be used on FC2 conveyor.

Ordering example

PR—B320—L320—90—BC2—S

Lift and rotate unit: PR	**Workpiece pallet width:** Bwt=320	**Workpiece pallet length:** Lwt=320	**Rotate angle:** 90°
Adapted conveyor type: BC2	**Cylinder brand:** S	**Special requirements:** None	

PR-L Lift and rotate unit

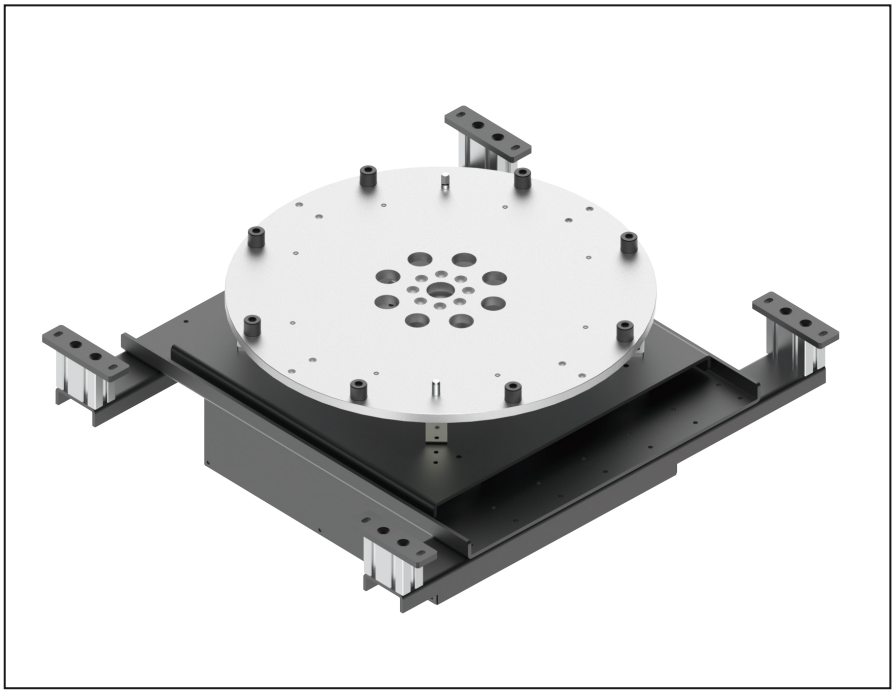

Delivery notes

Scope of delivery:

Lift and rotate unit

Protective housing

Assembly kit

Throttle valve(ϕ6)

Magnetic switches: Two wires type

(No need to distinguish PNP or NPN)

*Note: Magnetic switches includes 500mm cable, without connector.

Condition on delivery:

Fully assembled

Recommended accessories:

Stopper

Two-position five-way dual electronic control solenoid valve

- For rotating workpiece pallets 90° or 180°
- Suitable for application with requirement for workpiece pallet orientation
- Suitable for WA2 and WE2 workpiece pallet size over 640mm×640mm
- Lift height (above conveying medium): 25mm
- Extra bushings(4pcs) need to be added on workpiece pallet to fit with the lift and rotate unit.
- Support customization

PR-L - Dimensions

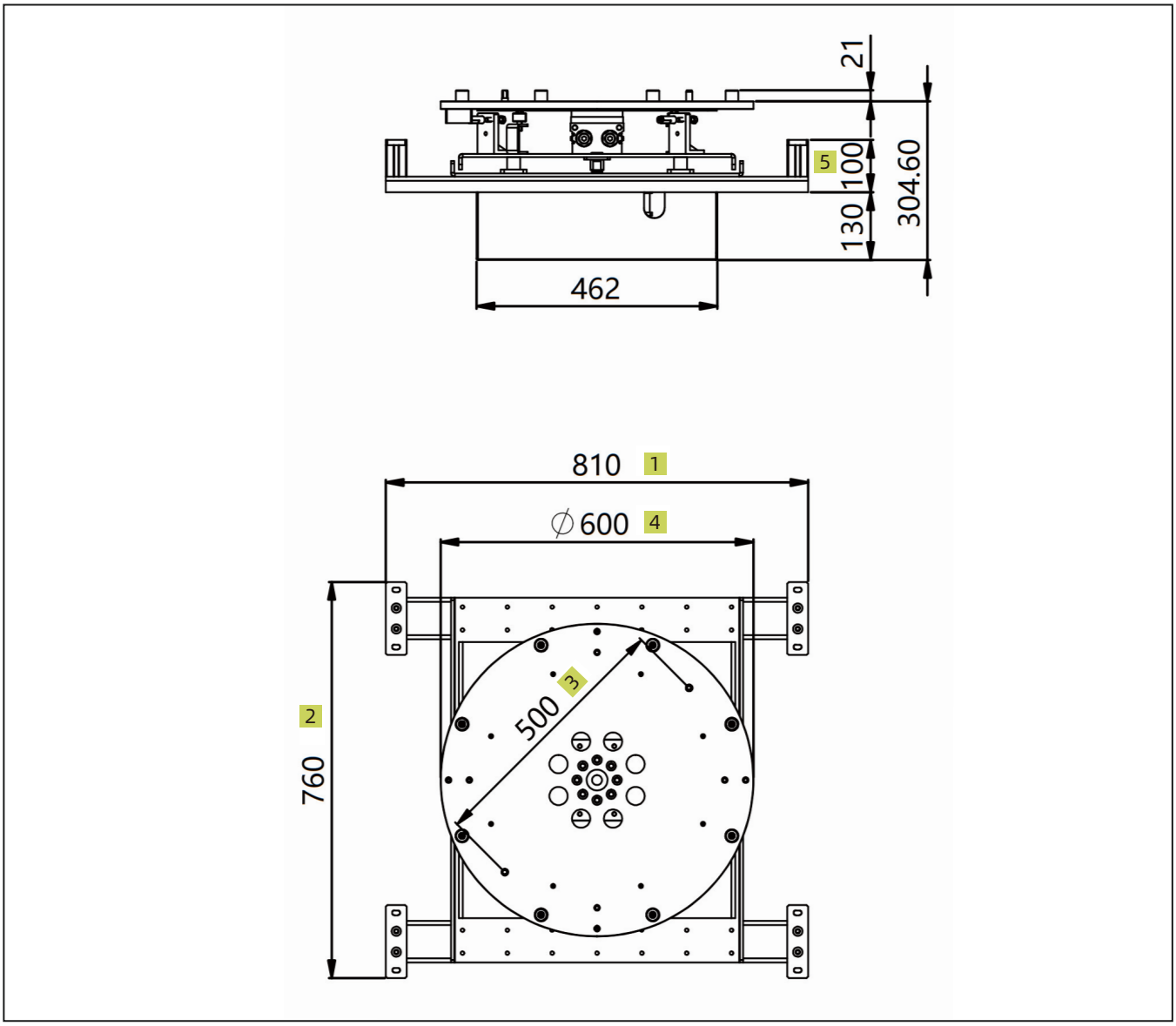

5 The dimension is changed for different conveyor type.

Combination options(mm)	Dimensions			
	1	2	3	4
B640×(L640 ~ 1200)	650	660	400	500
B720×(L640 ~ 1200)	730	660	400	500
B800×(L640 ~ 1200)	810	760	500	600
B1040×(L720 ~ 1200)	1050	860	600	700
B1200×(L800 ~ 1200)	1210	960	700	800

Note: Dimensions 1, 2, 3 and 4 are changed for different combination options.

PR-L - Application

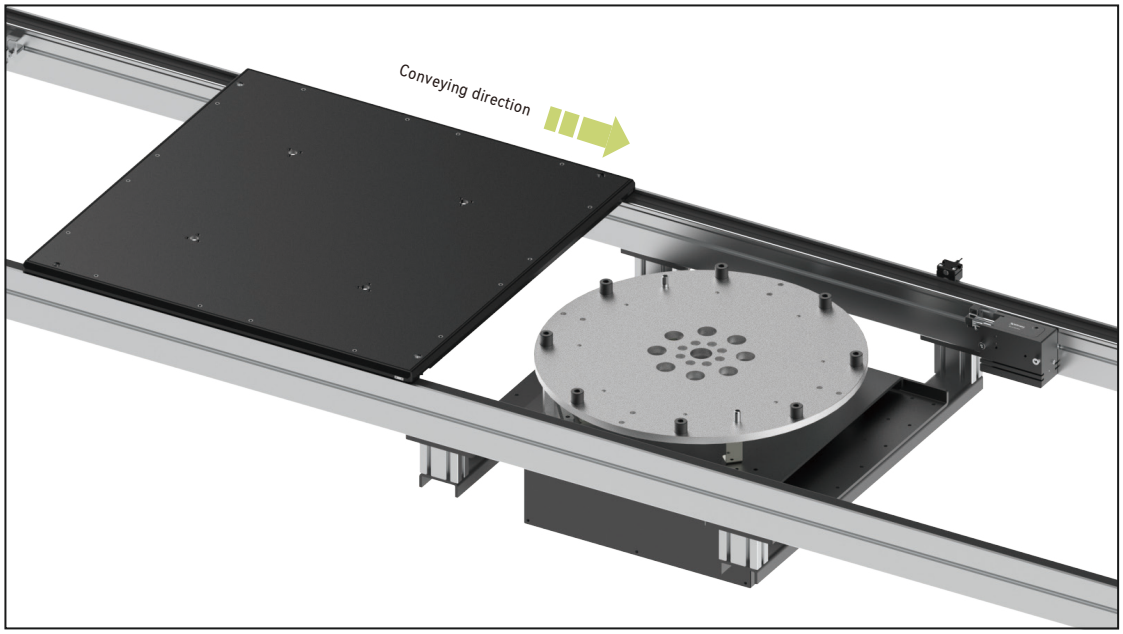

The workpiece pallet in the picture is with 4pcs extra bushings.

Technical data

Workpiece pallet width(mm)*	Bwt	640,720,800,1040,1200
Workpiece pallet length(mm)*	Lwt	640,720,800,1040,1200
Combination options(mm)	Bwt x Lwt	640 x 640、720、800、1040、1200
		720 x 640、720、800、1040、1200
		800 x 640、720、800、1040、1200
		1040 x720、800、1040、1200
		1200 x 800、1040、1200
Permitted maximum load(kg)*		50
Lift cylinder bore diameter(mm)*		63
Rotate cylinder bore diameter(mm)*		100
Adapted conveyor type*		BC2/AC2/PC2
Rotate angle*		90°、180°

Note: While adapted conveyor type is BC2, lift and rotate unit can also be used on FC2 conveyor.

Ordering information

PR-L	**Lift and rotate unit:** PR-L
B ☐	**Workpiece pallet width:** 640 / 720 / 800 / 1040 / 1200
L ☐	**Workpiece pallet length:** 640 / 720 / 800 / 1040 / 1200
☐	**Rotate angle:** 90° / 180°
☐	**Adapted conveyor type:** BC2 / PC2 / AC2
☐	**Cylinder brand:** S
SP	**Special requirements:** a.Customized load b.Customized rotate angle

Note: While adapted conveyor type is BC2, lift and rotate unit can also be used on FC2 conveyor.

Ordering example

PR-L—B800—L800—90—BC2—S

Lift and rotate unit: PR-L	**Workpiece pallet width:** Bwt=800	**Workpiece pallet length:** Lwt=800	**Rotate angle:** 90°
Adapted conveyor type: BC2	**Cylinder brand:** S	**Special requirements:** None	

07

Curve unit

Curve unit is used to change the direction of a workpiece pallet and to keep the orientation of the workpiece.

KV/90 Curve unit

Use round belt to convey and turn the workpiece pallet in 90°.

KV/180 Curve unit

Use round belt to convey and turn the workpiece pallet in 180°.

CV/90 Curve unit

Use flat top chain to convey and turn the workpiece pallet in 90°.

CV/180 Curve unit

Use flat top chain to convey and turn the workpiece pallet in 180°.

KV/90 Curve unit

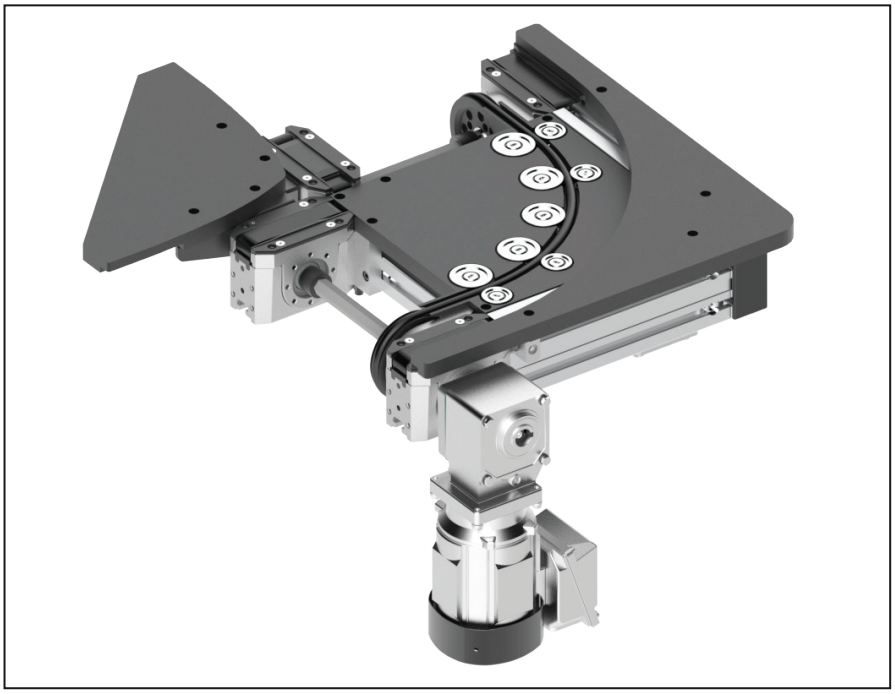

Delivery notes

Scope of delivery:

Curve unit

Motor(with terminal box)

Condition on delivery:

Fully assembled

Recommended accessories:

Curve Leg(with foundation bracket and bolts)

Connection kit

- Keep the orientation of the workpiece during conveying
- Conveying medium: Round belt + Timing belt
- Motor is installed at the exit side of the curve unit
- Permitted maximum load: 20kg
- Compliant with ESD
- Support customization
- Prohibit accumulation
- Prohibit reverse operation

Note: The guide profile of the conveyor connected to the KV curve unit must be partially cut off and chamfered to avoid workpiece pallet jammed.

KV/90-Dimensions

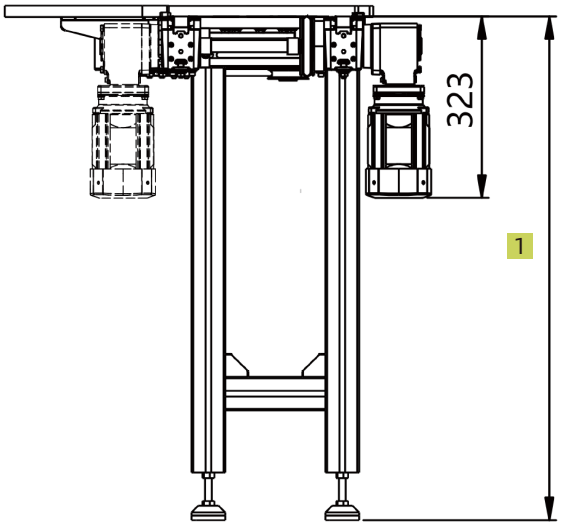

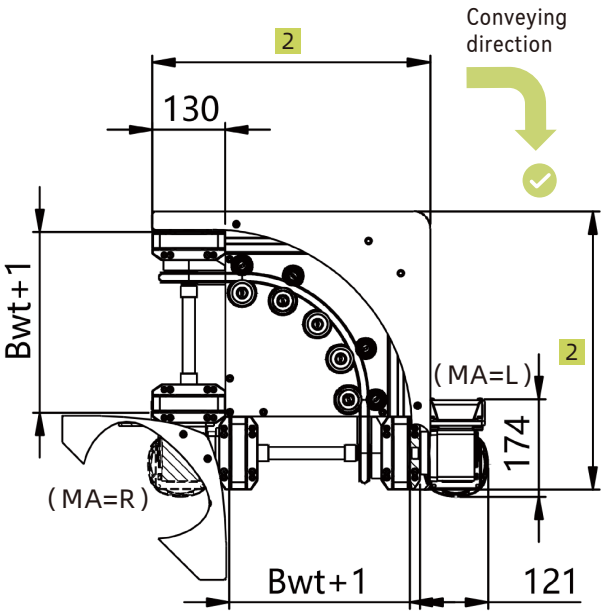

Conveying direction

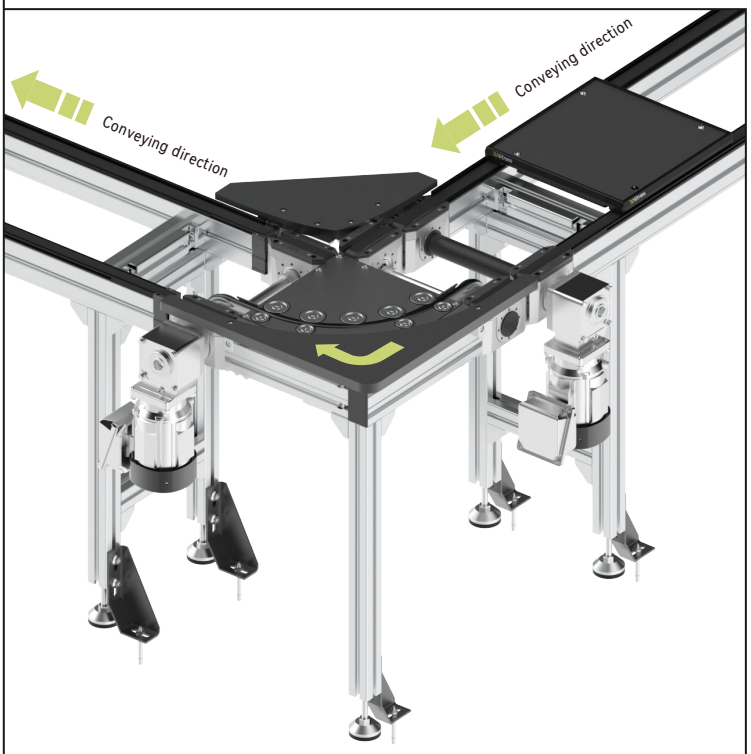

Application case

1 Customized 2 Follow workpiece pallet size

Technical data

Workpiece pallet width(mm)*	Bwt	160,240,320,400
Workpiece pallet length(mm)*	Lwt	160,240,320,400
Combination options(mm)	BwtxLwt	160 x 160、240
		240 x 160、240、320
		320 x 240、320、400
		400 x 320、400
Permitted maximum load(kg)*		20
Permitted maximum surface load(kg/cm)*		1
Rated speed(m/min)*	V	0,6,9,12,15,18
Motor type*		Three phase motor
Motor mounting location*	MA	L(left), R(Right)
Conveying direction*		C0(Clockwise) / CL(Anti-clockwise)
Working voltage*	U	220/380AC
Working frequency*	f	50Hz
Motor connection*	AT	Terminal box

Workpiece pallet width	Support customization.
Workpiece pallet length	Support customization.
Rated speed	V=0 means no motor. Support customizing other speed.
Working voltage	Support customizing other working voltage.
Working frequency	**a.**Support customizing other working frequency. **b.**VFD can be used for speed adjusting.
Motor connection	Default terminal box direction is shown in the figure. For other request, please contact us.

KV/180 Curve unit

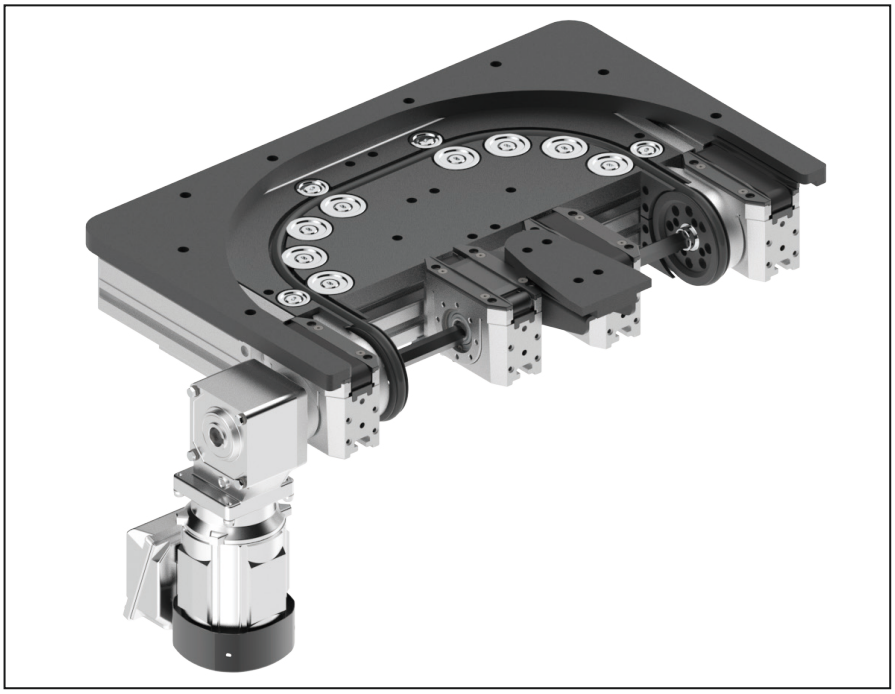

Delivery notes

Scope of delivery:

Curve unit

Motor(with terminal box)

Condition on delivery:

Fully assembled

Recommended accessories:

Curve Leg(with foundation bracket and bolts)

Connection kit

- Keep the orientation of the workpiece during conveying
- Conveying medium： Round belt + Timing belt
- Motor is installed at the exit side of the curve unit
- Permitted maximum load： 20kg
- Compliant with ESD
- Support customization
- Prohibit accumulation
- Prohibit reverse operation

Note: The guide profile of the conveyor connected to the KV curve unit must be partially cut off and chamfered to avoid workpiece pallet jammed.

KV/180 - Dimensions

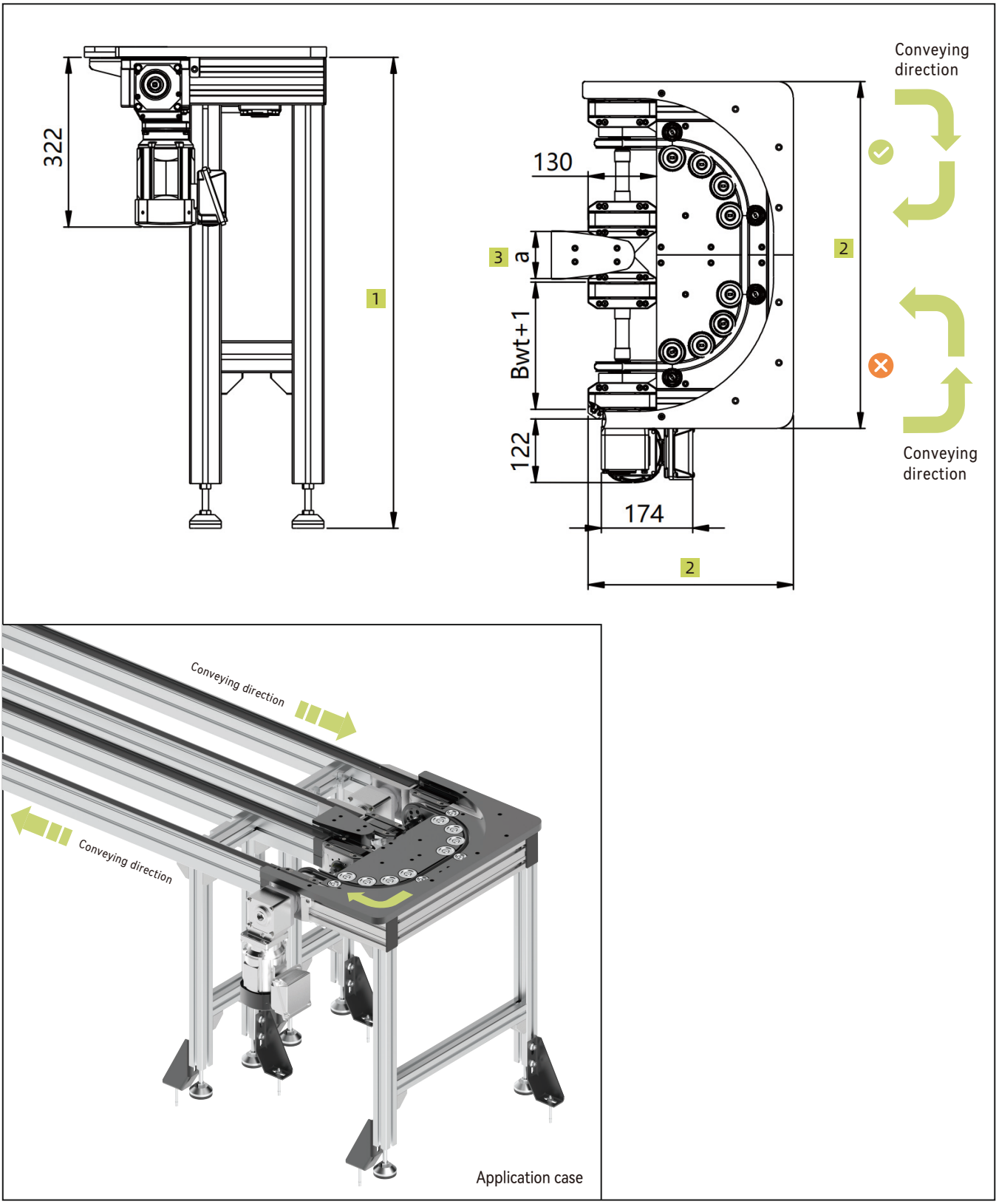

1 Customized 2 Follow workpiece pallet size 3 Options of distance a: 90mm/135mm

Technical data

Workpiece pallet width(mm)*	Bwt	160,240,320,400
Workpiece pallet length(mm)*	Lwt	160,240,320,400
Combination options(mm)	BwtxLwt	160 x 160、240
		240 x 160、240、320
		320 x 240、320、400
		400 x 320、400
Permitted maximum load(kg)*		20
Permitted maximum surface load(kg/cm)*		1
Rated speed(m/min)*	V	0,6,9,12,15,18
Distance of conveyors*	a	90 , 135
Motor type*		Three phase motor
Conveying direction		C0(Clockwise) / CL(Anti-clockwise)
Working voltage*	U	220/380AC
Working frequency*	f	50Hz
Motor connection*	AT	Terminal box

Workpiece pallet width	Support customization.
Workpiece pallet length	Support customization.
Rated speed	V=0 means no motor. Support customizing other speed.
Working voltage	Support customizing other working voltage.
Working frequency	**a.**Support customizing other working frequency. **b.**VFD can be used for speed adjusting.
Motor connection	Default terminal box direction is shown in the figure. For other request, please contact us.

Ordering information

KV	**Curve unit type:** KV / 90 KV / 180
B ▢	**Workpiece pallet width:** 160 / 240 / 320 / 400 / customized
L ▢	**Workpiece pallet length:** 160 / 240 / 320 / 400 / customized
V ▢	**Rated speed:** 0 1) / 6 / 9 / 12 / 15 / 18 / customized
▢	**Conveying direction:** C0(Clockwise) / CL(Anti-clockwise)
▢	**Motor mounting location:** L(left), R(Right) Note: Only for KV90 curve unit
A ▢	**Motor mounting angle:** 0 / 90 /180 / 270
▢	**Motor type:** ZY02(Default brand)
SP	**Special requirements:** a.Working voltage b.Working frequency c.Terminal box direction d.Motor connection e.Motor mounting location 1) V=0 means no motor

Ordering example

KV/90—B320—L320—V12—C0—L—A0—ZY02

Curve unit type: KV/90	**Workpiece pallet width:** Bwt=320	**Workpiece pallet length:** Lwt=320	**Rated speed:** 12m/min
Conveying direction: C0(Clockwise)	**Motor mounting location:** L(left)	**Motor mounting angle:** 0°	**Motor type:** ZY02
Special requirements: None			

Ordering example

KV/180—B320—L320—V12—C0—A0—ZY02

Curve unit type: KV/180	**Workpiece pallet width:** Bwt=320	**Workpiece pallet length:** Lwt=320	**Rated speed:** 12m/min
Conveying direction: C0(Clockwise)	**Motor mounting angle:** 0°	**Motor type:** ZY02	**Special requirements:** None

CV/90 Curve unit

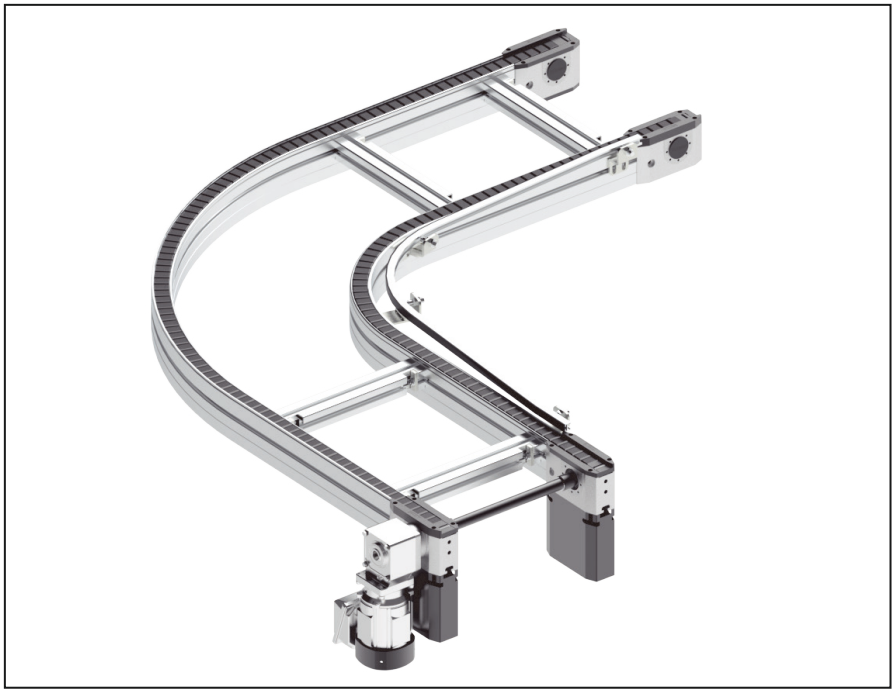

Delivery notes

Scope of delivery:

Curve unit

Motor(with terminal box)

Condition on delivery:

Fully assembled

Recommended accessories:

Curve Leg(with foundation bracket and bolts)

Connection kit

Automatic lubricate unit

- Keep the orientation of the workpiece during conveying
- Conveying medium: Flat top chain
- Prohibit reverse operation
- Automatic lubricate unit can be used.
- The straight section at the both ends of the curve unit can be extended.
- Support customization
- WA2 workpiece pallets can stop on the CV curve.
  WE2 workpiece pallets cannot stop on the CV curve.

CV/90 - Dimensions

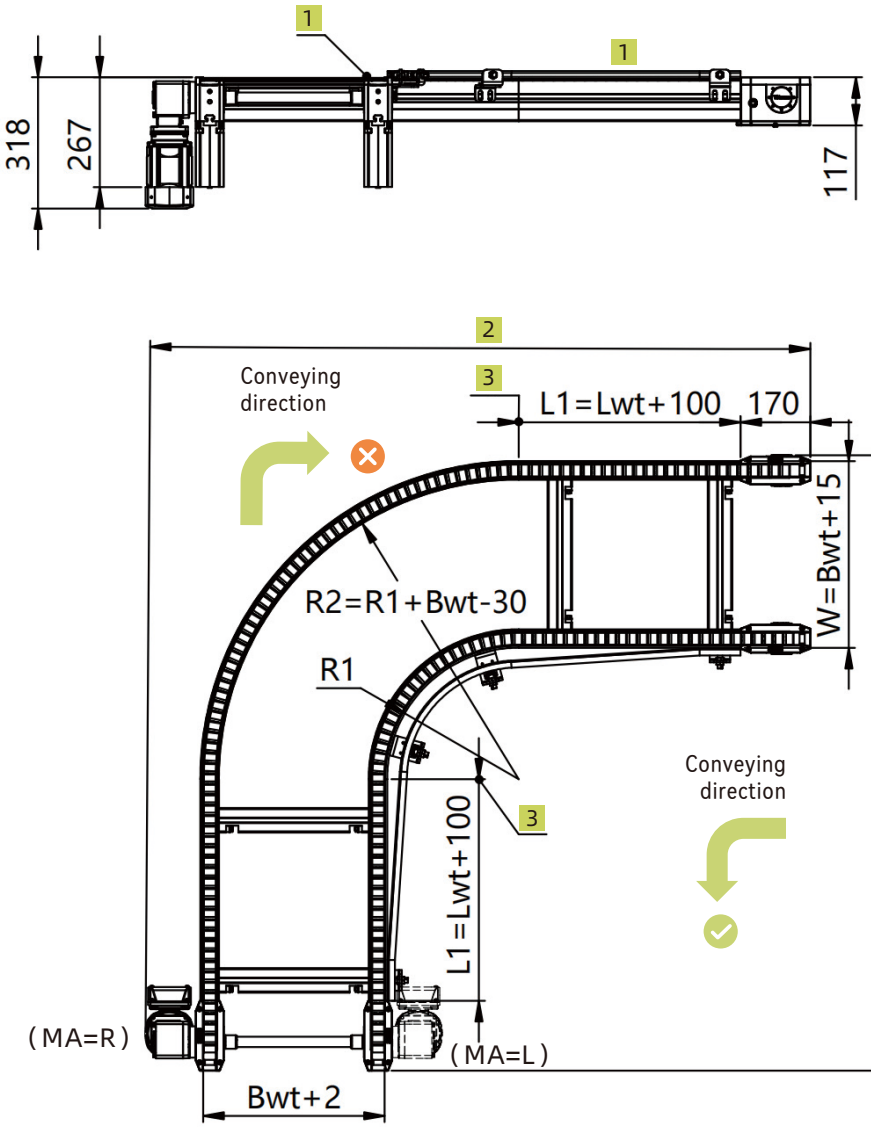

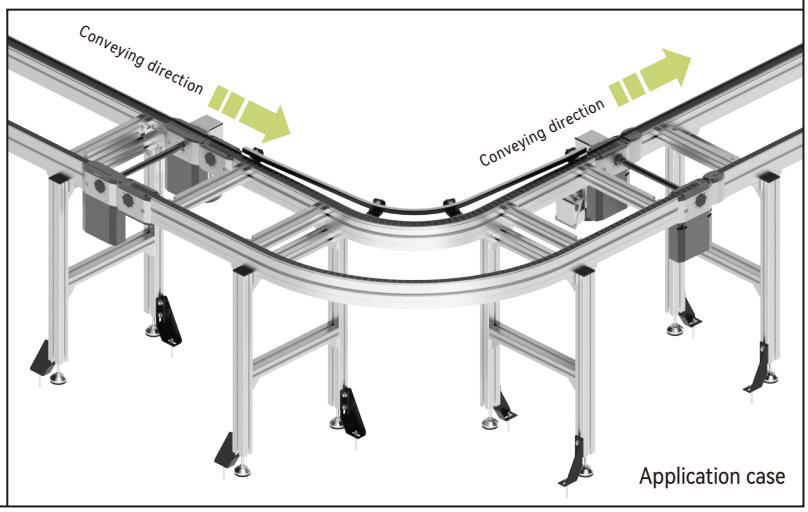

1 Conveyor medium top face
2 Follow workpiece pallet size
3 Support customization

Note: For workpiece pallet length is less than 560mm, the dimensions of the curve unit is shown in above drawing. Curve unit inner diameter R1 is 320mm.

CV/90 - Dimensions

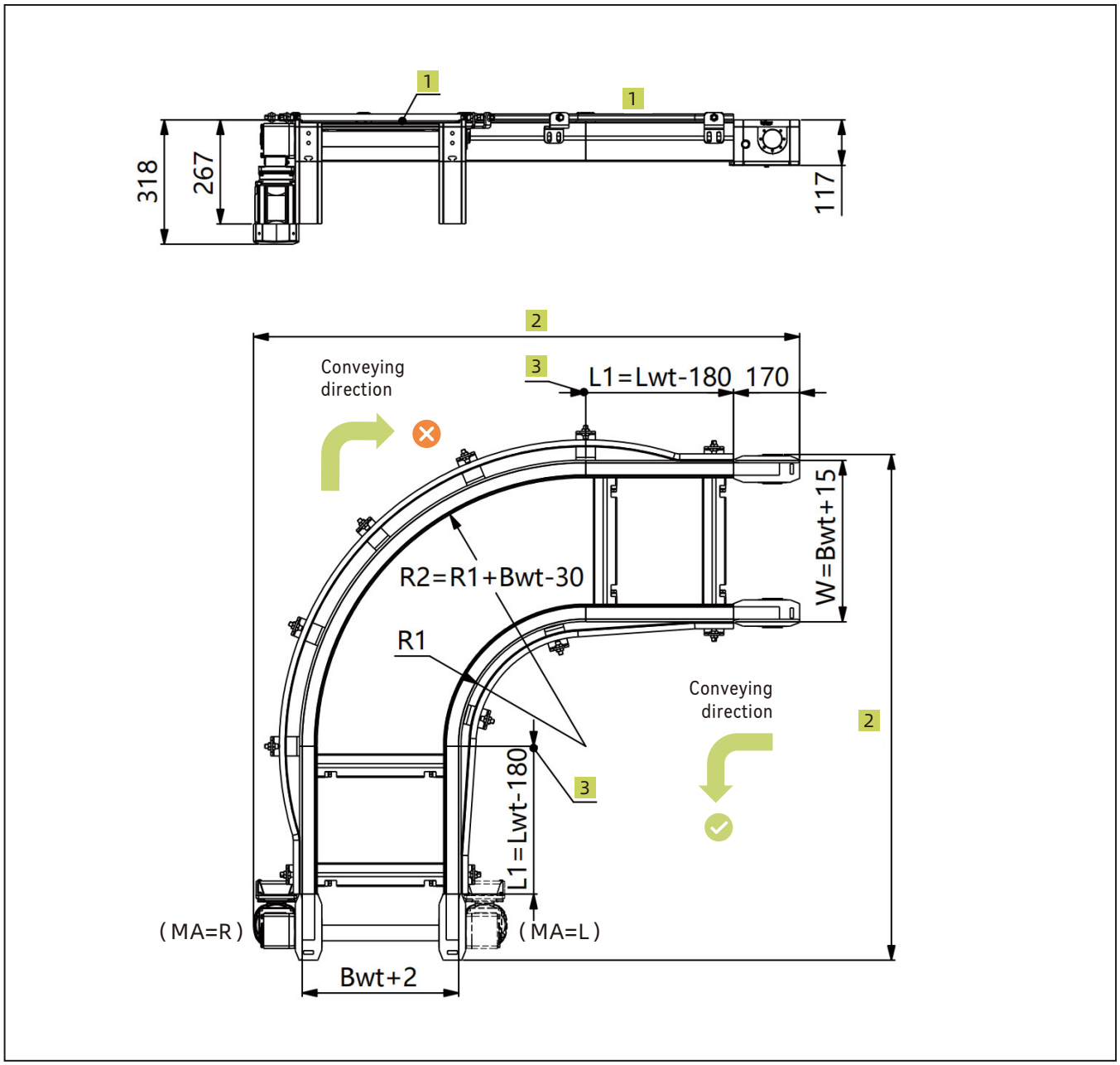

1 Conveyor medium top face

2 Follow workpiece pallet size

3 Support customization

Note: For workpiece pallet length is between 560mm and 1040mm, the dimensions of the curve unit is shown in above drawing.

For workpiece pallet length Lwt is less than 800mm, curve unit inner diameter R1 is 320mm.

For other lengths, the inner diameter R1 is 400mm.

Technical data

Workpiece pallet width(mm)*	Bwt	160,240,320,400,480,560,640,720,800,1040,1200
Workpiece pallet length(mm)*	Lwt	160,240,320,400,480,560,640,720,800,1040,1200
Combination options(mm)	Bwt x Lwt	160 x 160、240、320
		240 x 160、240、320、400、480
		320 x 160、240、320、400、480
		400 x 240、320、400、480、560、640、720
		480 x 320、400、480、560、640、720、800
		560 x 320、400、480、560、640、720、800
		640 x 320、400、480、560、640、720、800、1040
		720 x 400、480、560、640、720、800、1040
		800 x 480、560、640、720、800、1040
Permitted maximum load(kg)		90
Permitted maximum surface load(kg/cm)*		1
Rated speed(m/min)*	V	0,6,9,12,15,18
Motor type*		Three phase motor
Motor mounting location*	MA	L(left), R(Right)
Conveying direction		C0(Clockwise) / CL(Anti-clockwise)
Working voltage*	U	220/380AC
Working frequency*	f	50Hz
Motor connection*	AT	Terminal box

Workpiece pallet width	Support customization.
Workpiece pallet length	Support customization.
Rated speed	V=0 means no motor. Support customizing other speed.
Working voltage	Support customizing other working voltage.
Working frequency	**a.**Support customizing other working frequency. **b.**VFD can be used for speed adjusting.
Motor connection	Default terminal box direction is shown in the figure. For other request, please contact us.

CV/180 Curve unit

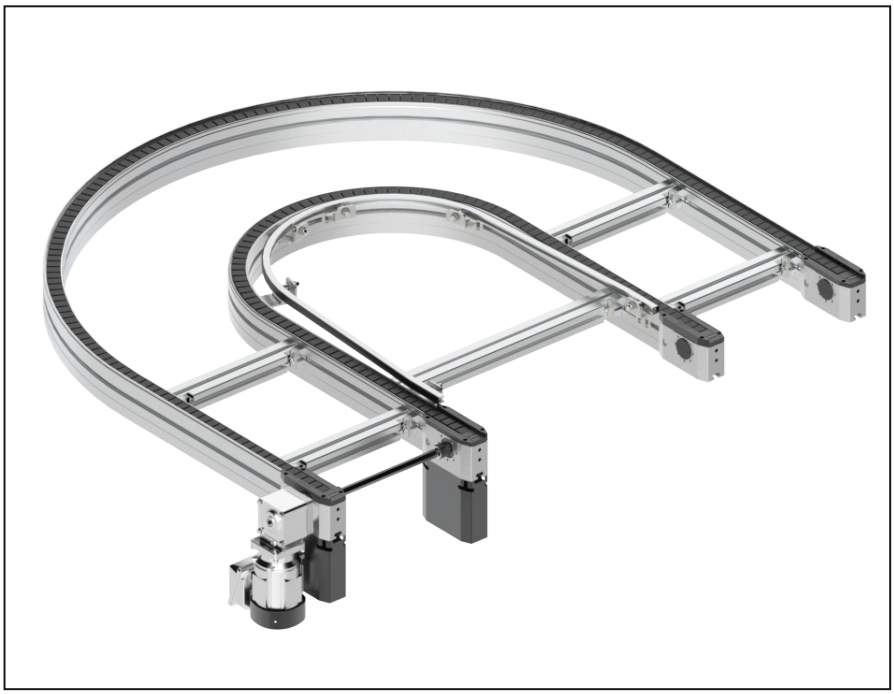

Delivery notes

Scope of delivery:

Curve unit

Motor(with terminal box)

Condition on delivery:

Fully assembled

Recommended accessories:

Curve Leg(with foundation bracket and bolts)

Connection kit

Automatic lubricate unit

- Keep the orientation of the workpiece during conveying
- Conveying medium: Flat top chain
- Prohibit reverse operation
- Automatic lubricate unit can be used.
- The straight section at the both ends of the curve unit can be extended.
- Support customization
- WA2 workpiece pallets can stop on the CV curve.
  WE2 workpiece pallets cannot stop on the CV curve.

CV/180 - Dimensions

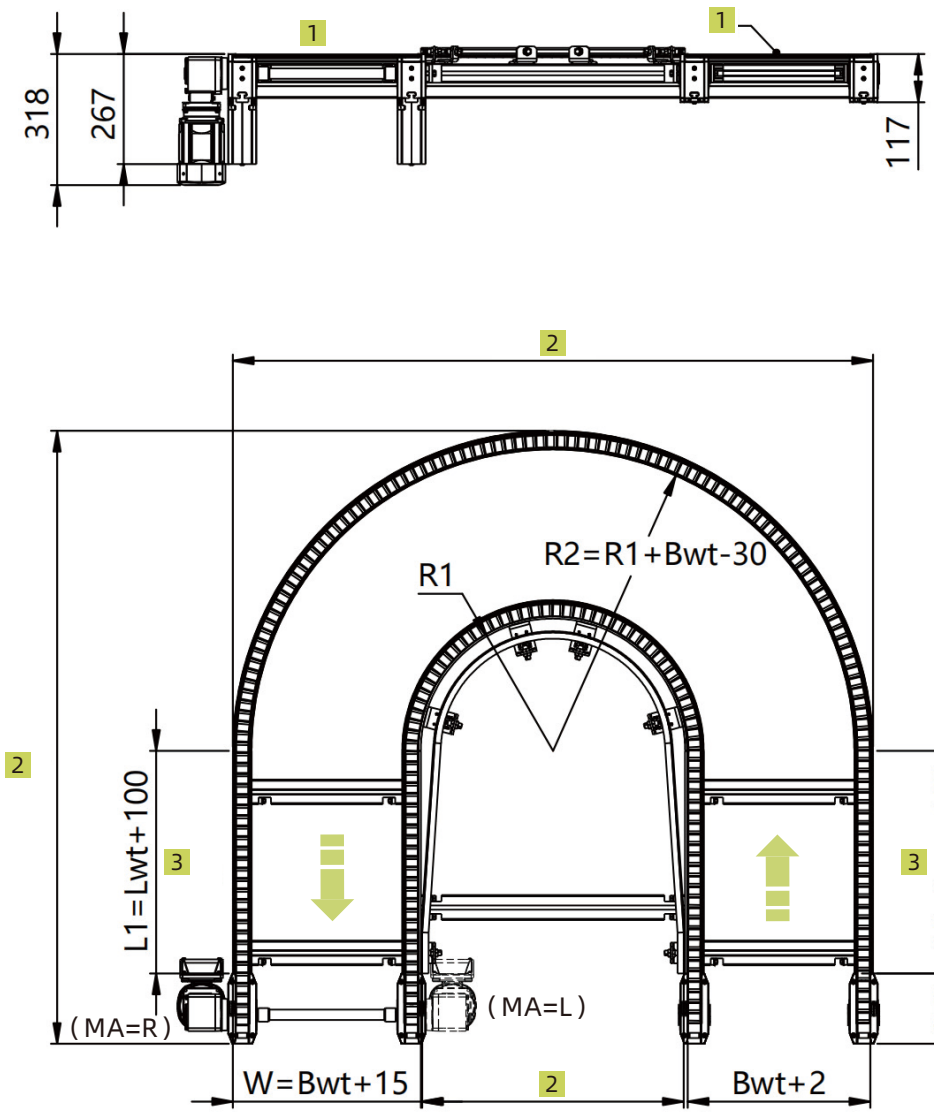

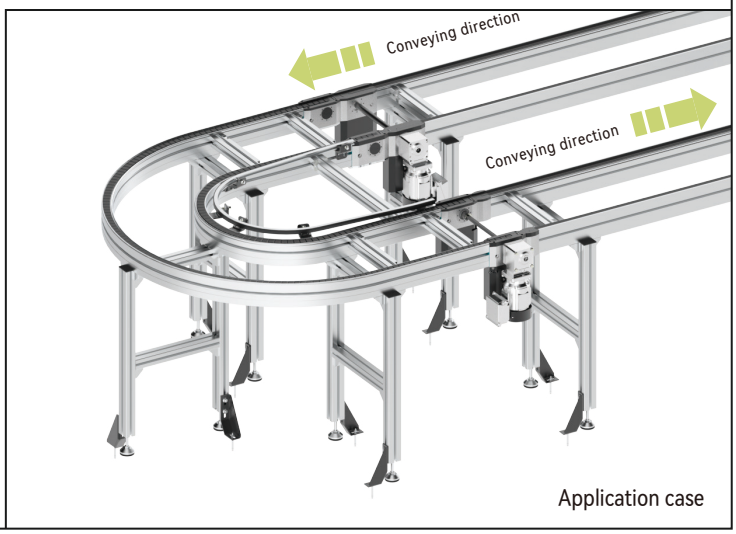

Application case

1 Conveyor medium top face
2 Follow workpiece pallet size
3 Support customization

Note: For workpiece pallet length is less than 560mm, the dimensions of the curve unit is shown in above drawing. Curve unit inner diameter R1 is 320mm.

CV/180 - Dimensions

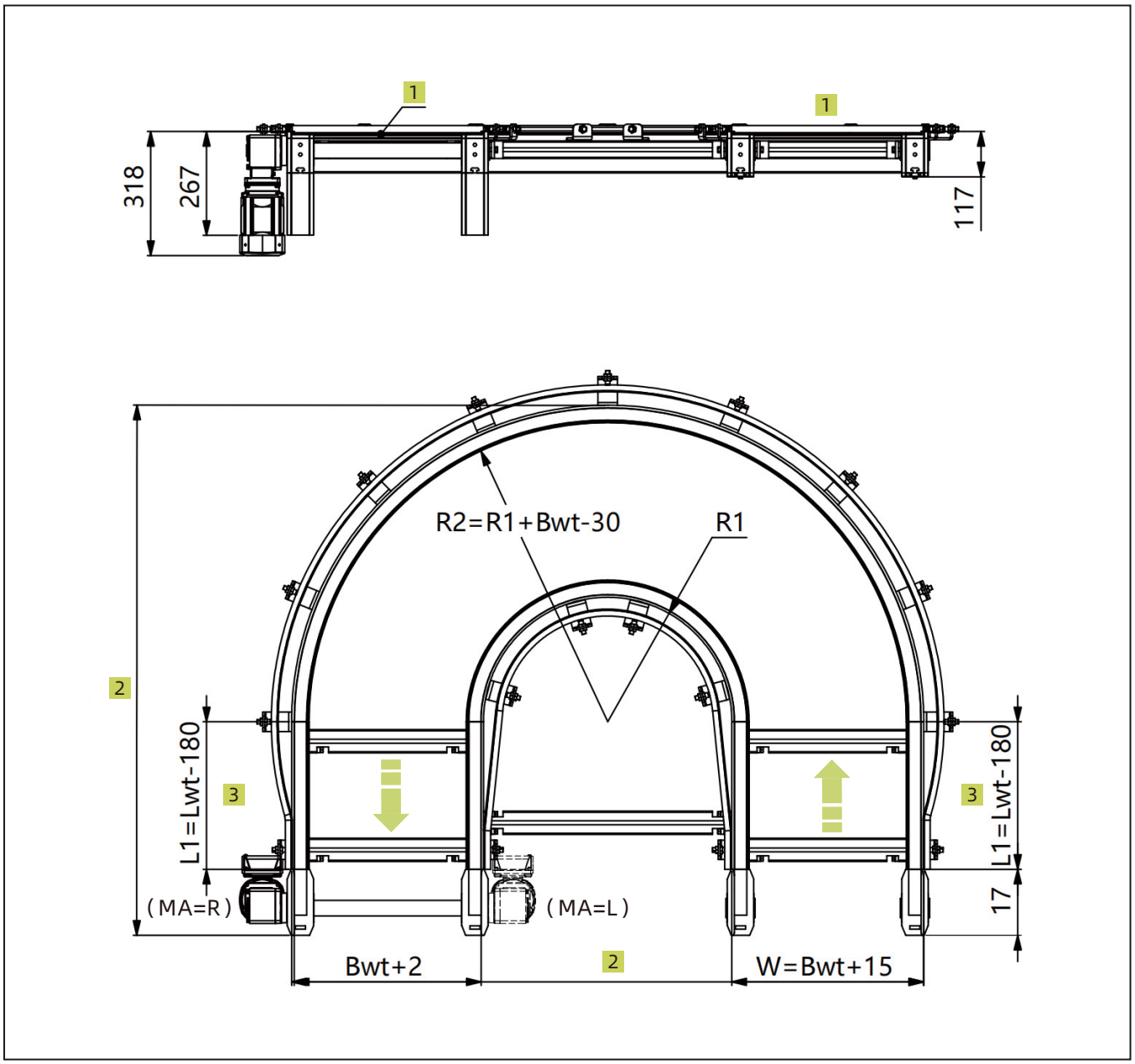

1 Conveyor medium top face
2 Follow workpiece pallet size
3 Support customization

Note: For workpiece pallet length is between 560mm and 1040mm, the dimensions of the curve unit is shown in above drawing.
For workpiece pallet length Lwt is less than 800mm, curve unit inner diameter R1 is 320mm.
For other lengths, the inner diameter R1 is 400mm.

Technical data

Workpiece pallet width(mm)*	Bwt	160,240,320,400,480,560,640,720,800,1040,1200
Workpiece pallet length(mm)*	Lwt	160,240,320,400,480,560,640,720,800,1040,1200
Combination options(mm)	Bwt x Lwt	160 x 160、240、320
		240 x 160、240、320、400、480
		320 x 160、240、320、400、480
		400 x 240、320、400、480、560、640、720
		480 x 320、400、480、560、640、720、800
		560 x 320、400、480、560、640、720、800
		640 x 320、400、480、560、640、720、800、1040
		720 x 400、480、560、640、720、800、1040
		800 x 480、560、640、720、800、1040
Permitted maximum load(kg)		60
Permitted maximum surface load(kg/cm)*		1
Rated speed(m/min)*	V	0,6,9,12,15,18
Motor type*		Three phase motor
Motor mounting location*	MA	L(left), R(Right)
Conveying direction		C0(Clockwise) / CL(Anti-clockwise)
Working voltage*	U	220/380AC
Working frequency*	f	50Hz
Motor connection*	AT	Terminal box

Workpiece pallet width	Support customization.
Workpiece pallet length	Support customization.
Rated speed	V=0 means no motor. Support customizing other speed.
Working voltage	Support customizing other working voltage.
Working frequency	**a.**Support customizing other working frequency. **b.**VFD can be used for speed adjusting.
Motor connection	Default terminal box direction is shown in the figure. For other request, please contact us.

Ordering information

CV	**Curve unit type:** CV / 90 CV / 180
B▢	**Workpiece pallet width:** 160 / 240 / 320 / 400 / 480 / 560 / 640 / 720 / 800 / 1040 / 1200
L▢	**Workpiece pallet length:** 160 / 240 / 320 / 400 / 480 / 560 / 640 / 720 / 800 / 1040 / 1200
V▢	**Rated speed:** 0 1) / 6 / 9 / 12 / 15 / 18 / customized
▢	**Conveying direction:** C0(Clockwise) / CL(Anti-clockwise)
▢	**Motor mounting location:** L(left), R(Right)
A▢	**Motor mounting angle:** 0 / 90 /180 / 270
▢	**Motor type:** ZY02(Default brand)
SP	**Special requirements:** a.Working voltage b.Working frequency c.Terminal box direction d.Motor connection e.Motor mounting location 1) V=0 means no motor

Ordering example

CV/90—B320—L320—V12—C0—L—A0—ZY02

Curve unit type: CV/90	**Workpiece pallet width:** Bwt=320	**Workpiece pallet length:** Lwt=320	**Rated speed:** 12 m/min
Conveying direction: C0(Clockwise)	**Motor mounting location:** L(left)	**Motor mounting angle:** 0°	**Motor type:** ZY02
Special requirements: None			

Motor technical data of curve units

Curve unit type	Rated speed (m/min)	Permitted maximum load (kg)	Working frequency (Hz)	Motor power (KW)
KV/90	6	20	50	0.2
	9		50	0.2
	12		50	0.2
	15		50	0.2
	18		50	0.2
KV/180	6	20	50	0.2
	9		50	0.2
	12		50	0.2
	15		50	0.2
	18		50	0.2
CV/90	6	90	50	0.2
	9		50	0.2
	12		50	0.2
	15		50	0.2
	18		50	0.2
CV/180	6	60	50	0.2
	9		50	0.2
	12		50	0.2
	15		50	0.2
	18		50	0.2

08

Lifter

Conveying workpiece pallet vertically in double layers or multiple layers conveyor system.

LP/B——Belt lifter, lift mechanism is driven by servo motor

Suitable for double layers or multiple layers conveyor system. Permitted maximum lift speed is 500mm/s.

LP/P——Pneumatic lifter, lift mechanism is driven by cylinder

Suitable for double layers conveyor system. Permitted maximum lift speed is 300mm/s.

LP/S——Ball screw lifter, lift mechanism is driven by servo motor

Suitable for double layers or multiple layers conveyor system. Permitted maximum lift speed is 500mm/s.
Support customizing higher load.

LP/C——Pneumatic lifter, lift mechanism is driven by cylinder

Suitable for double layers conveyor system. Permitted maximum lift speed is 300mm/s.
Support customizing higher load and stroke.

LP/X——Stepping lifter, lift mechanism is driven by servo motor

Suitable for double layers conveyor system. Stepping conveying workpiece pallets in a short cycle time.

LP/B Belt lifter

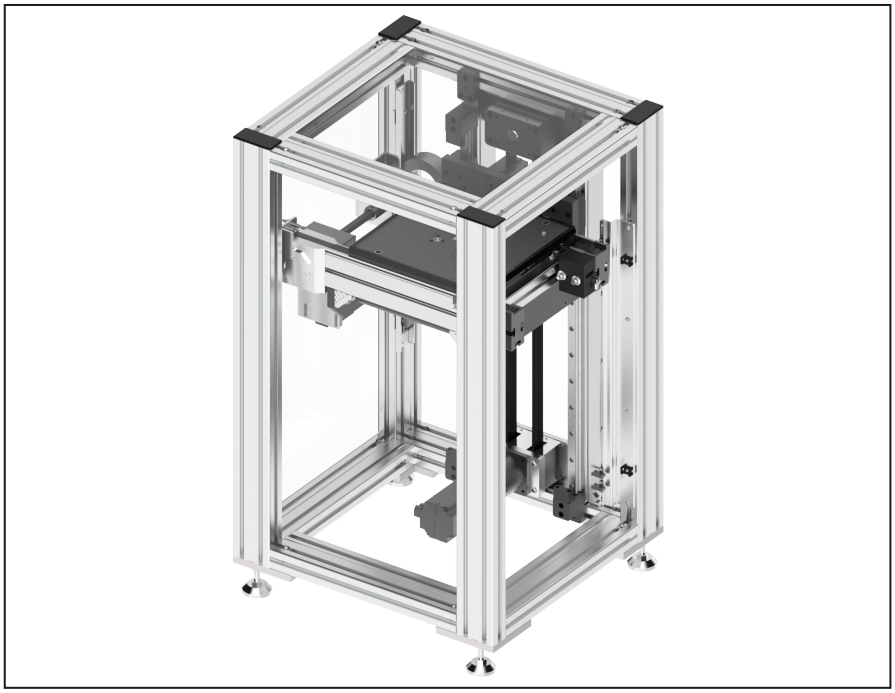

- Suitable for double layers or multiple layers conveyor system.
- Support customizing the quantity of workpiece pallet to be conveyed for each cycle
- Permitted maximum load: 30kg
- Permitted maximum lift speed: 500mm/s
- Reversible operation possible
- Stroke adjustable
- Support customization

Note: Default conveyor type for lifter is timing belt conveyor.

Delivery notes

Scope of delivery:

Belt lifter

Servo motor(Including pulse type servo drive)

*Note: Default cable length between motor and drive is 5 meters.

Stepper motor(Including I/O type stepper drive)

Slot photoelectric sensor:

NPN (3pcs, with 2 meters wire)

Opposite photoelectric sensor:

NPN (1 pair, with 2 meters wire)

Proximity sensor:

NPN (2pcs, with 2 meters wire)

Safety pin

Acrylic protective cover

Condition on delivery:

Fully assembled

Recommended accessories:

Stopper

LP/B - Dimensions

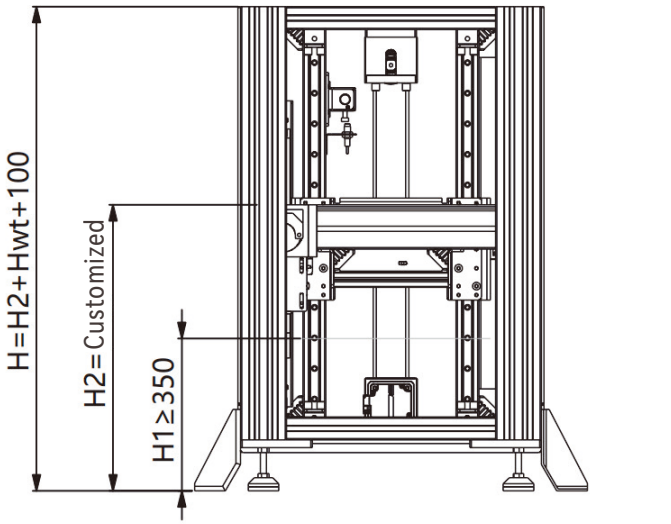

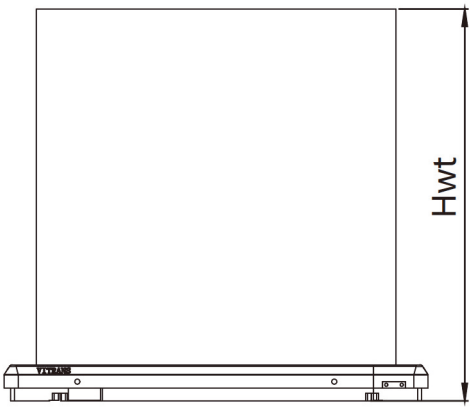

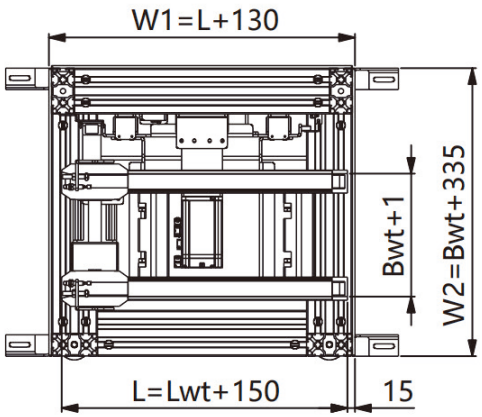

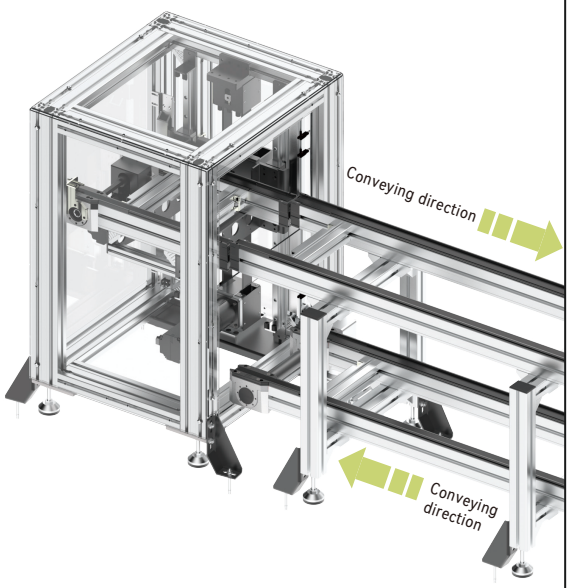

Application case

Note 1: Above specifications are for single workpiece pallet lifter.

Note 2: Default workpiece pallet height Hwt is 100mm.

Note 3: To load or unload workpiece on lifter, please specify.

Note 4: To add a photoelectric safety protection device, please specify.

Note: To use the lifter. The minimum conveyor height is 350mm. And the maximum conveyor height is 1500mm.

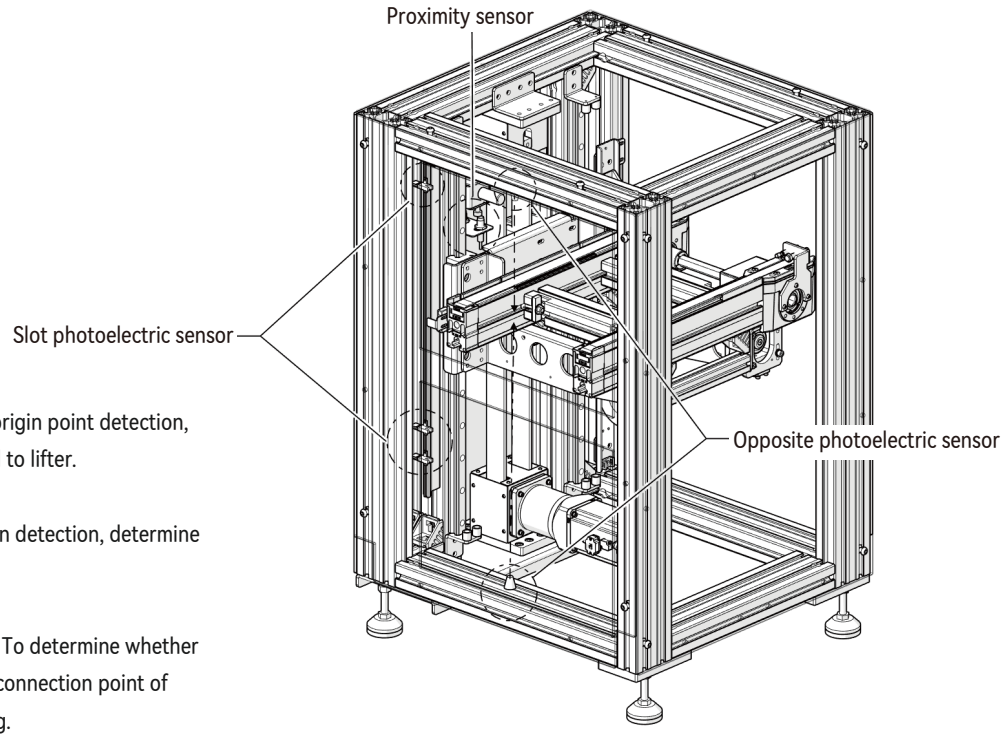

1.Slot photoelectric sensor: For origin point detection, provide reference position signal to lifter.

2. Proximity sensor: For safety pin detection, determine safety pin is open or closed.

3.Opposite photoelectric sensor: To determine whether there is workpiece pallet on the connection point of lifter and conveyors before lifting.

Technical data

Workpiece pallet width(mm)*	Bwt	160,240,320,400,480,560,640(Support customization;)
Workpiece pallet length(mm)*	Lwt	160,240,320,400,480,560,640(Support customization;)
Conveyor length(mm)*	L	L=Lwt+150
Permitted maximum load(kg)*		30
Top layer conveyor height range(mm)*		≤1500
Bottom layer conveyor height range(mm)*		≥350
Lift speed(mm/s)*	V	≤500
Rated speed of conveyor(m/min)*		0,6,9,12,15,18(V=0 means no motor. Support customizing other speed;)
Lift motor type*		Servo motor(Including pulse type servo drive)
Conveyor motor type*		Stepper motor(Including I/O type stepper drive)
Motor mounting location*	MA	ML(Middle-left), MR(Middle-right)
Working voltage of servo motor*	U	**AC:** 220V(Single phase0
Working voltage of stepper motor*	U	**DC:** 48V 3.8A(Support customizing other working voltage;)
Working frequency*	f	50Hz

LP/P Pneumatic lifter

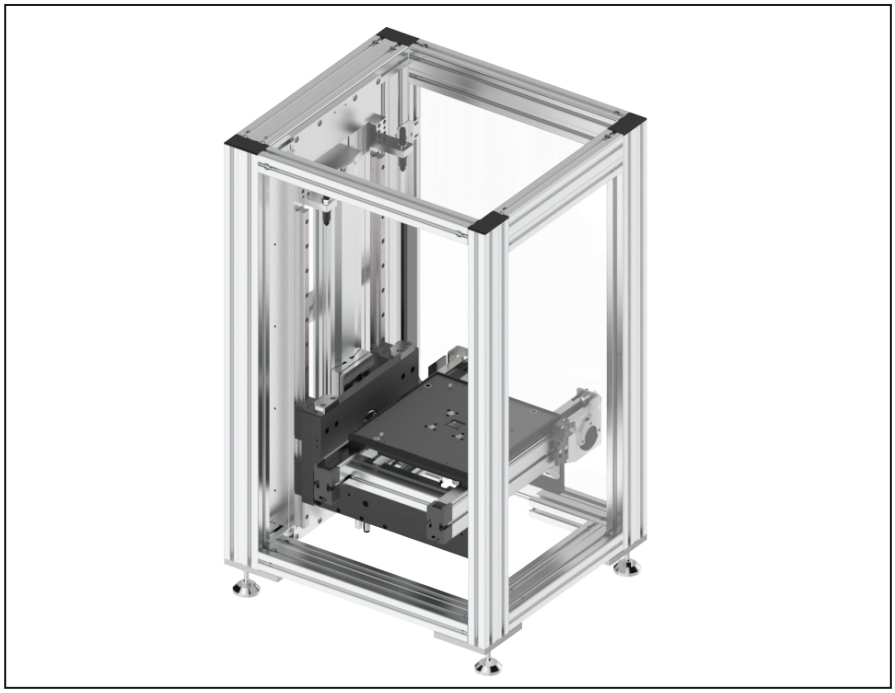

- Suitable for double layers conveyor system.
- Support customizing the quantity of workpiece pallet to be conveyed for each cycle
- Permitted maximum load: 30kg
- Permitted maximum lift speed: 300mm/s
- Support customization

Note: Default conveyor type for lifter is timing belt conveyor.

Delivery notes

Scope of delivery:

Pneumatic lifter
Stepper motor(Including I/O type stepper drive)
Opposite photoelectric sensor:
NPN (1 pair, with 2 meters wire)
Magnetic switches:
Two wires type (2pcs, with 500mm wire)
Throttle valve（φ10）
Check valve
Acrylic protective cover

Condition on delivery:

Fully assembled

Recommended accessories:

Stopper
Proximity sensor
Three-position five-way sealed solenoid valve

LP/P - Dimensions

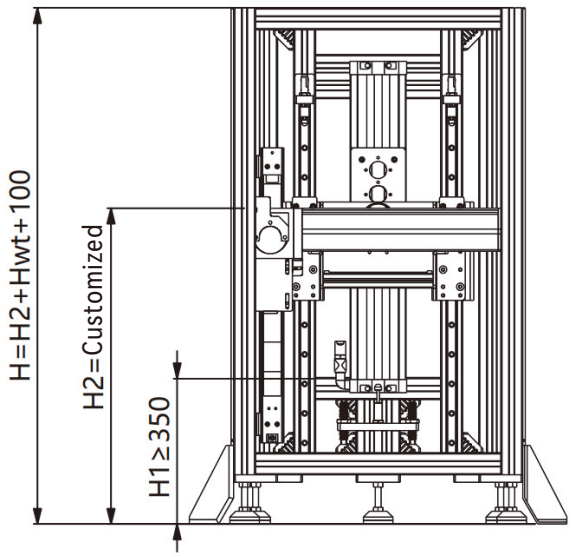

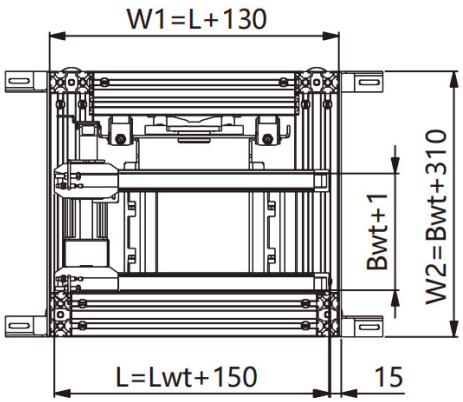

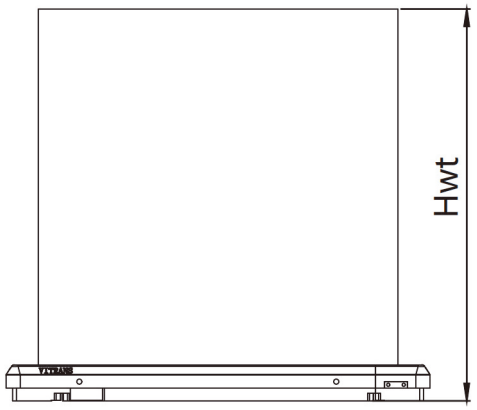

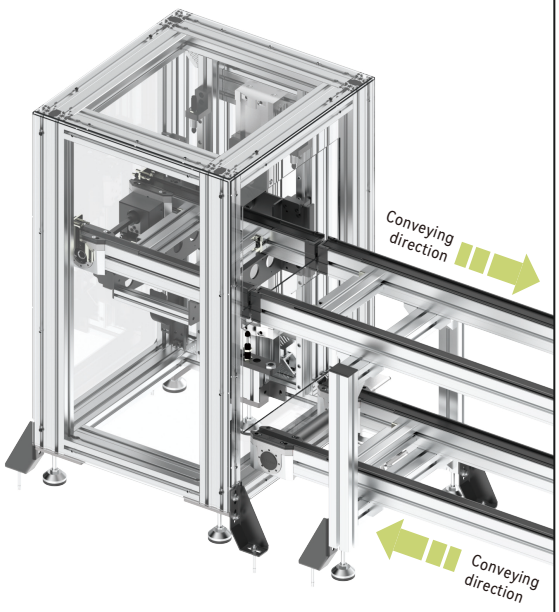

Application case

Note 1: Above specifications are for single workpiece pallet lifter.

Note 2: Default workpiece pallet height Hwt is 150mm.

Note 3: To load or unload workpiece on lifter, please specify.

Note 4: To add a photoelectric safety protection device, please specify.

Note: To use the lifter. The minimum conveyor height is 350mm. And the maximum conveyor height is 1500mm.

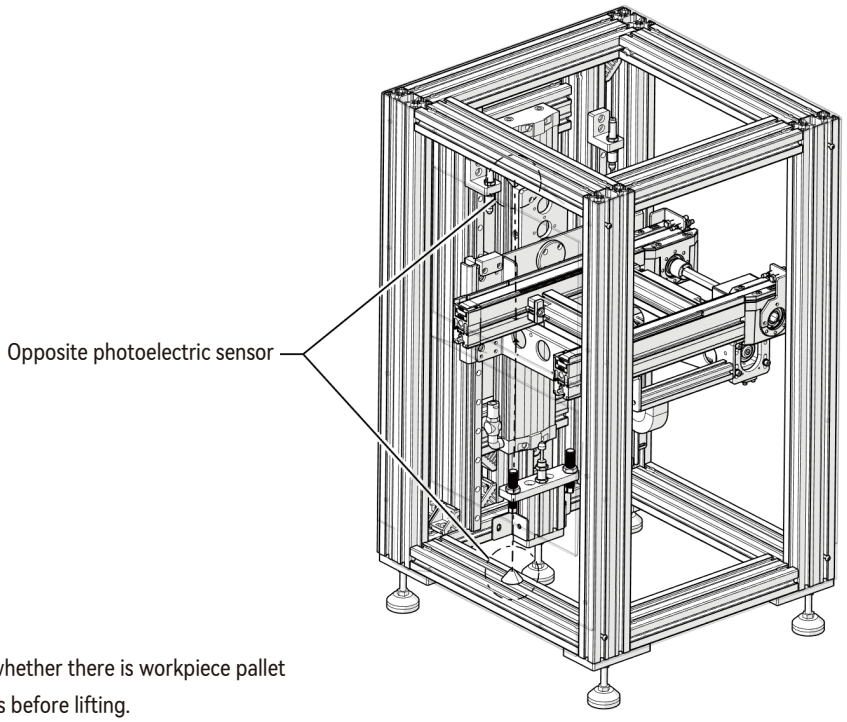

Opposite photoelectric sensor: To determine whether there is workpiece pallet on the connection point of lifter and conveyors before lifting.

Technical data

Workpiece pallet width(mm)*	Bwt	160,240,320,400,480,560,640(Support customization;)
Workpiece pallet length(mm)*	Lwt	160,240,320,400,480,560,640(Support customization;)
Conveyor length(mm)*	L	L=Lwt+150
Permitted maximum load(kg)*		30
Top layer conveyor height range(mm)*		≤1500
Bottom layer conveyor height range(mm)*		≥350
Lift speed(mm/s)*	V	≤300
Lift cylinder bore diameter(mm)*		50
Rated working air pressure*		0.4 ~ 0.8 MPa
Rated speed of conveyor(m/min)*		0,6,9,12,15,18(V=0 means no motor. Support customizing other speed;)
Motor type*		Stepper motor(Including I/O type stepper drive)
Motor mounting location*	MA	ML(Middle-left), MR(Middle-right)
Working voltage*	U	**DC:** 48V 3.8A（Support customizing other working voltage；）

LP/S Ball screw lifter

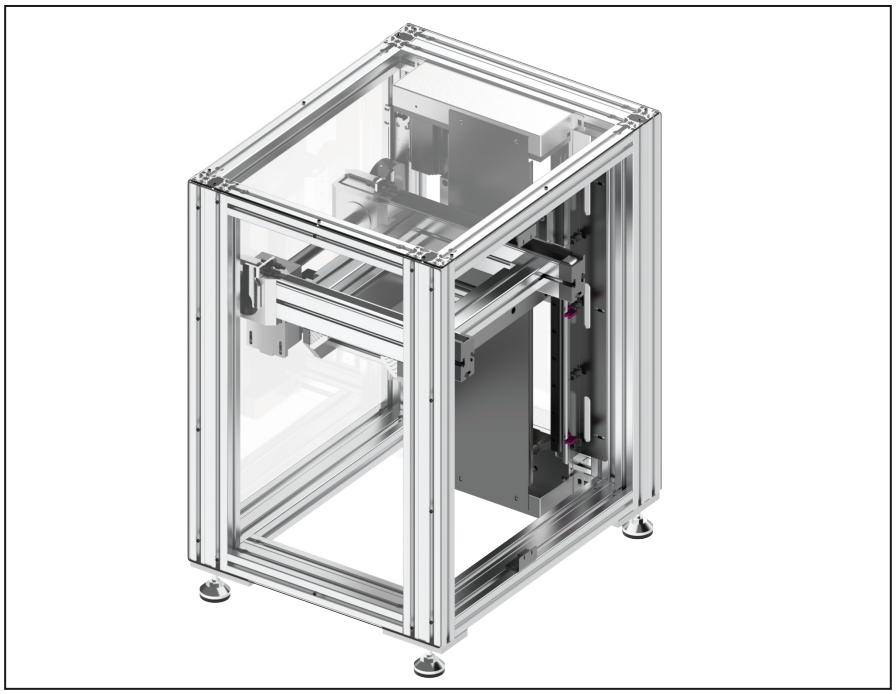

- Suitable for double layers or multiple layers conveyor system.
- Support customizing the quantity of workpiece pallet to be conveyed for each cycle
- Permitted maximum load: 30kg
- Permitted maximum lift speed: 500mm/s
- Stroke adjustable
- Support customization

Note: Default conveyor type for lifter is timing belt conveyor.

Delivery notes

Scope of delivery:

Ball screw lifter

Servo motor(Including pulse type servo drive)

*Note: Default cable length between motor and drive is 5 meters.

Stepper motor(Including I/O type stepper drive)

Slot photoelectric sensor:

NPN (3pcs, with 2 meters wire)

Opposite photoelectric sensor:

NPN (1 pair, with 2 meters wire)

Proximity sensor:

NPN (2pcs, with 2 meters wire)

Safety pin

Acrylic protective cover

Condition on delivery:

Fully assembled

Recommended accessories:

Stopper

LP/S - Dimensions

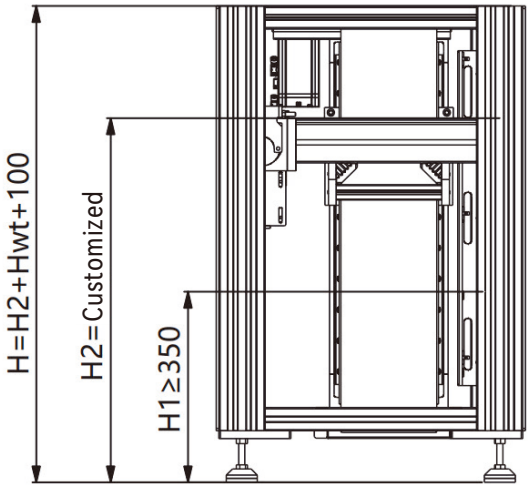

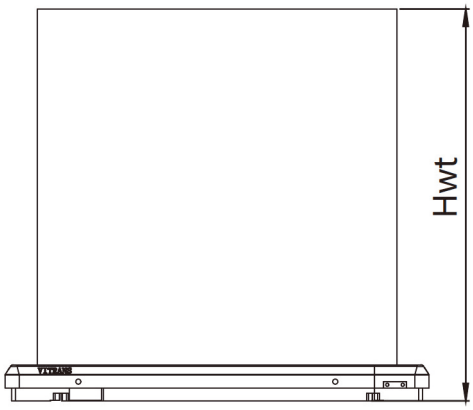

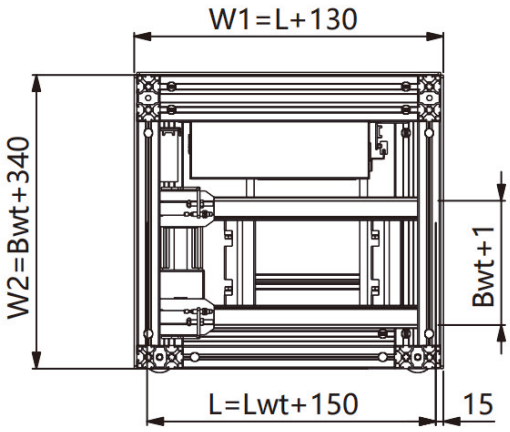

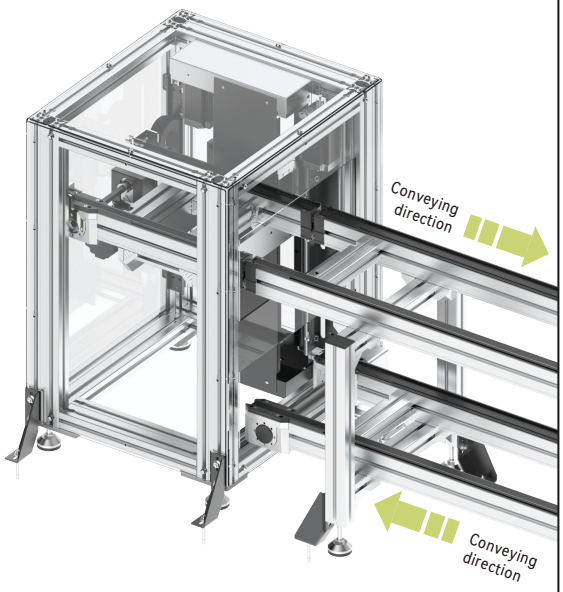

Application case

Note 1: Above specifications are for single workpiece pallet lifter.

Note 2: Default workpiece pallet height Hwt is 150mm.

Note 3: To load or unload workpiece on lifter, please specify.

Note 4: To add a photoelectric safety protection device, please specify.

Note: To use the lifter. The minimum conveyor height is 350mm. And the maximum conveyor height is 1500mm.

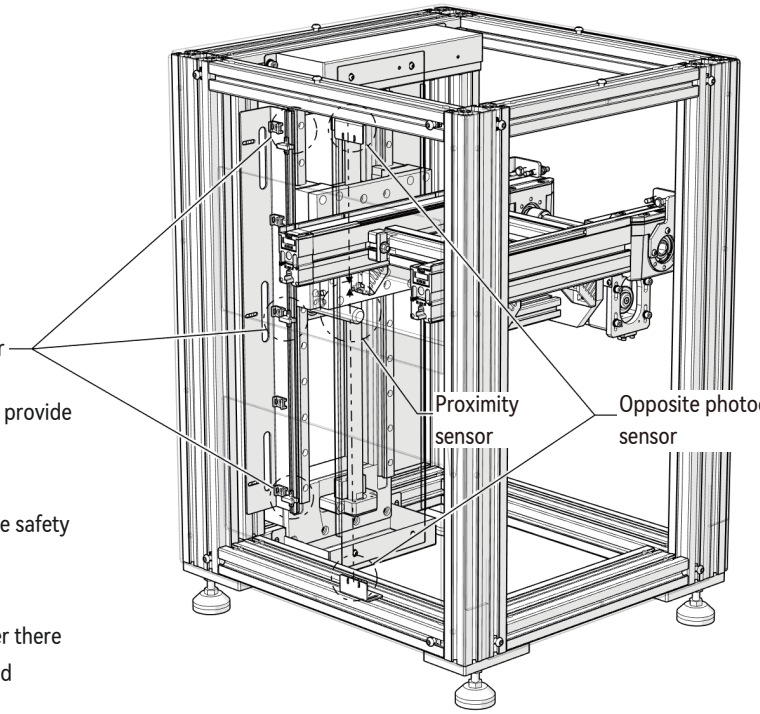

1.Slot photoelectric sensor: For origin point detection, provide reference position signal to lifter.

2. Proximity sensor: For safety pin detection, determine safety pin is open or closed.

3.Opposite photoelectric sensor: To determine whether there is workpiece pallet on the connection point of lifter and conveyors before lifting.

Technical data

Workpiece pallet width(mm)*	Bwt	160,240,320,400,480,560,640(Support customization;)
Workpiece pallet length(mm)*	Lwt	160,240,320,400,480,560,6409Support customization;)
Conveyor length(mm)*	L	L=Lwt+150
Permitted maximum load(kg)*		30(Support customization)
Top layer conveyor height range(mm)*		≤1500
Bottom layer conveyor height range(mm)*		≥350
Lift speed(mm/s)*	V	≤500
Rated speed of conveyor(m/min)*		0,6,9,12,15,18(V=0 means no motor. Support customizing other speed;)
Lift motor type*		Servo motor(Including pulse type servo drive)
Conveyor motor type*		Stepper motor(Including I/O type stepper drive)
Motor mounting location*	MA	ML(Middle-left), MR(Middle-right)
Working voltage of servo motor*	U	**AC:** 220V(Single phase)
Working voltage of stepper motor*	U	**DC:** 48V 3.8A(Support customizing other working voltage;)
Working frequency*	f	50Hz

Ordering information

LP/ ▢	**Lifter type:** LP/S LP/P LP/B
▢	**Conveyor type of lifter:** BC2 / AC2
B ▢	**Workpiece pallet width:** 160 / 240 / 320 / 400 / 480 / 560 / 640 / customized
L ▢	**Workpiece pallet length:** 160 / 240 / 320 / 400 / 480 / customized
V ▢	**Rated speed:** 0 1) / 6 / 9 / 12 / 15 / 18 / customized
▢	**Motor mounting location:** ML(Middle-left), MR(Middle-right)
▢	**Quantity of workpiece pallet quantity to be lifted each cycle**
▢ – ▢	**Bottom layer conveyor height-Top layer conveyor height**
SP	**Special requirements:** a.Working voltage b.Working frequency c.Conveyor motor type d.Motor mounting location 1) V=0 means no motor 2) Support customizing lift speed, 1000mm/s maximum

Ordering example

LP/S—BC2—B320—L320—V12—ML—2—500—900

Lifter type: LP/S	**Conveyor type of lifter:** BC2	**Workpiece pallet width:** Bwt=320	**Workpiece pallet length:** Lwt=320
Rated speed: 12 m/min	**Motor mounting location:** ML(Middle-Left)	**Quantity of workpiece pallet quantity to be lifted each cycle:** 2	
Bottom layer conveyor height-Top layer conveyor height: 500-900		**Special requirements:** None	

LP/C Pneumatic lifter

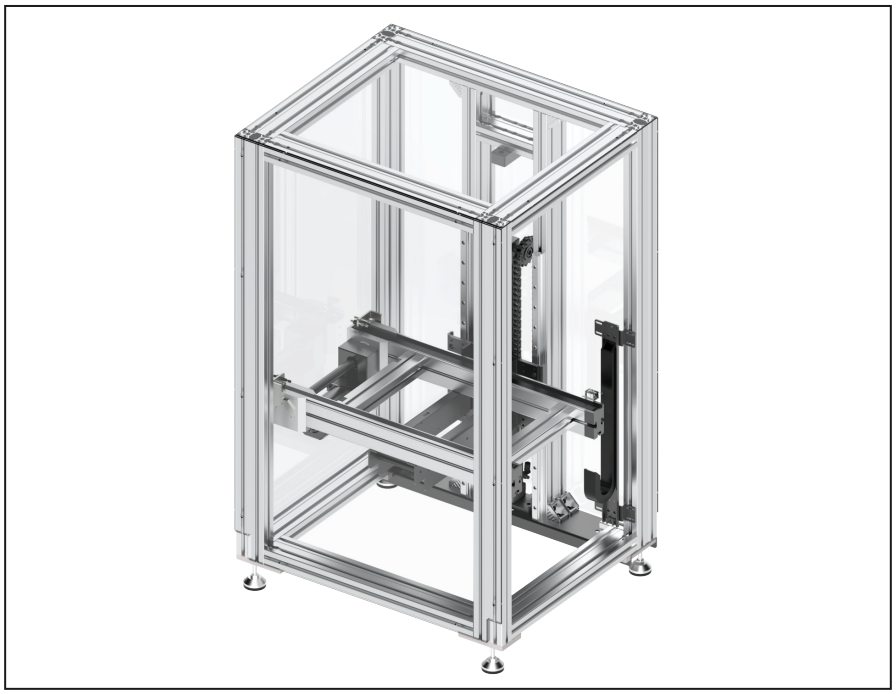

- Suitable for double layers conveyor system.
- Support customizing the quantity of workpiece pallet to be conveyed for each cycle
- Permitted maximum load: 50kg
- Permitted maximum lift speed: ≤300mm/s
- Support customization

Note: Default conveyor type for lifter is timing belt conveyor.

Delivery notes

Scope of delivery:

Pneumatic lifter
Speed motor (Including speed controller)
Opposite photoelectric sensor:
NPN (1 pair, with 2 meters wire)
Magnetic switches:
Two wires type (2pcs, with 500mm wire)
Throttle valve（ϕ10）
Check valve
Acrylic protective cover

Condition on delivery:

Fully assembled

Recommended accessories:

Stopper
Proximity sensor
Three-position five-way sealed solenoid valve

LP/C - Dimensions

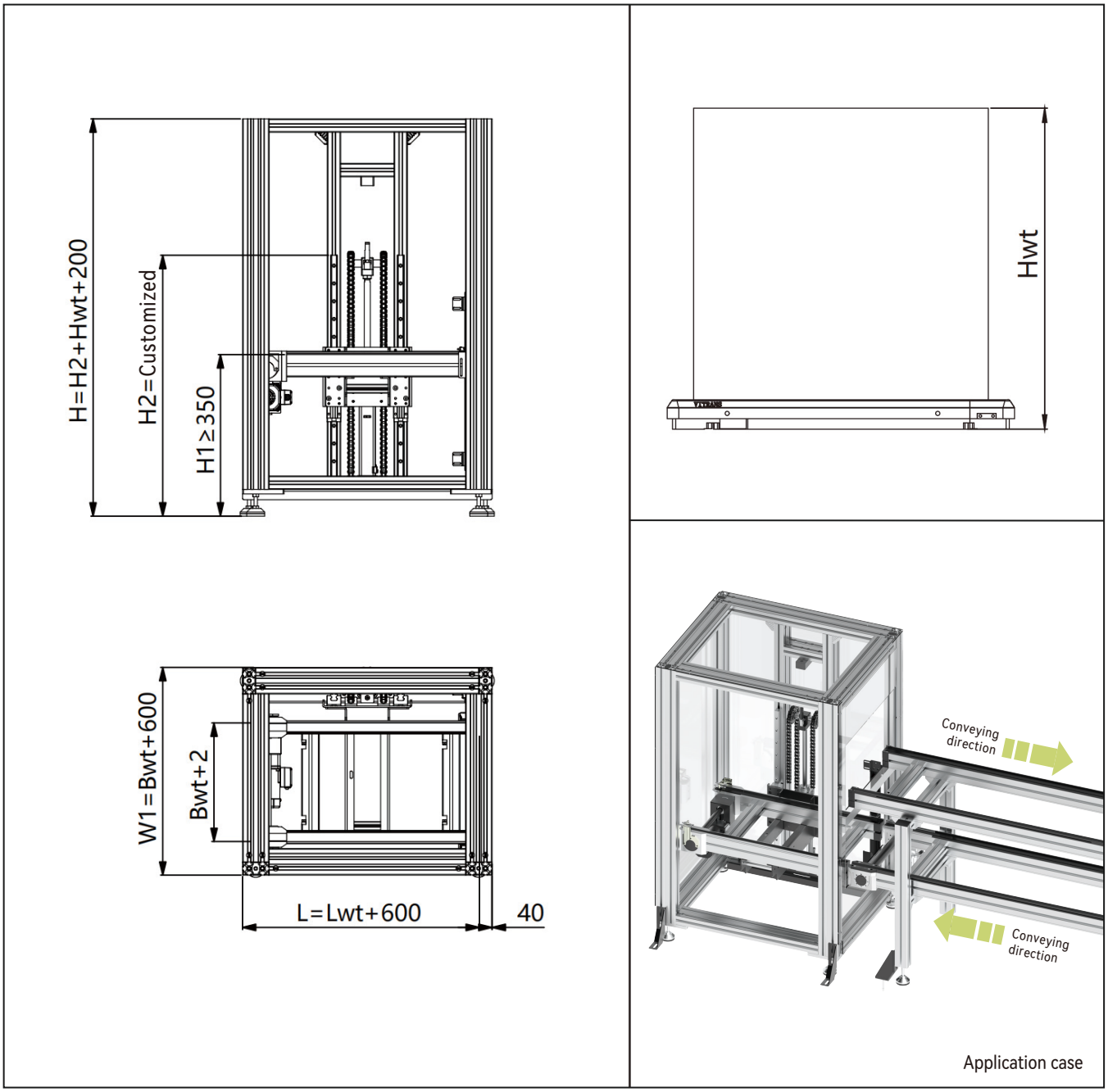

Note 1: Above specifications are for single workpiece pallet lifter.

Note 2: Default workpiece pallet height Hwt is 100mm.

Note 3: To load or unload workpiece on lifter, please specify.

Note 4: To add a photoelectric safety protection device, please specify.

Note: To use the lifter. The minimum conveyor height is 350mm. And the maximum conveyor height is 1500mm.

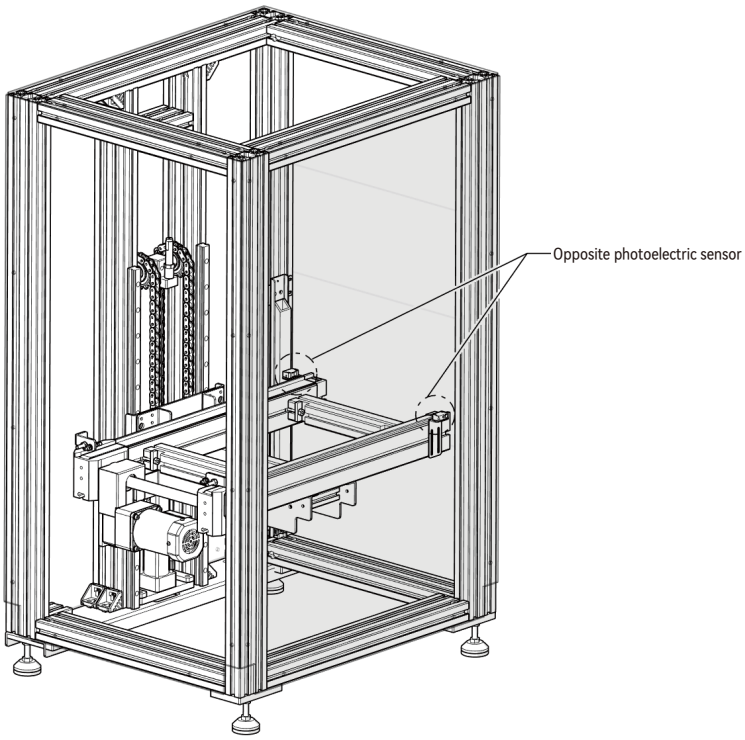

Opposite photoelectric sensor: To determine whether there is workpiece pallet on the connection point of lifter and conveyors before lifting.

Technical data

Workpiece pallet width(mm)*	Bwt	160,240,320,400,480,560,640(Support customization;)
Workpiece pallet length(mm)*	Lwt	160,240,320,400,480,560,640(Support customization;)
Conveyor length(mm)*	L	L=Lwt+150
Permitted maximum load(kg)*		50
Top layer conveyor height range(mm)*		≤1500
Bottom layer conveyor height range(mm)*		≥350
Lift speed(mm/s)*	V	≤300
Lift cylinder bore diameter(mm)*		80
Rated working air pressure*		0.4 ~ 0.8 MPa
Rated speed of conveyor(m/min)*		0,6,9,12,15,18(V=0 means no motor. Support customizing other speed;)
Motor type*		Speed motor (Including speed controller)
Motor mounting location*	MA	ML(Middle-left), MR(Middle-right)
Motor mounting location*	U	**AC:** 220V(Single phase)
Working frequency*	f	50Hz

Ordering information

LP/C	**Lifter type:** LP/C
▢	**Conveyor type of lifter:** BC2 / AC2
B ▢	**Workpiece pallet width:** 160 / 240 / 320 / 400 / 480 / 560 / 640 / customized
L ▢	**Workpiece pallet length:** 160 / 240 / 320 / 400 / 480 / 560 / 640 / customized
V ▢	**Rated speed:** 0 1) / 6 / 9 / 12 / 15 / 18 / customized
▢	**Motor mounting location:** ML(Middle-left), MR(Middle-right)
▢	**Quantity of workpiece pallet quantity to be lifted each cycle**
▢ – ▢	**Bottom layer conveyor height-Top layer conveyor height**
SP	**Special requirements:** a.Working voltage b.Working frequency c.Motor connection d.Motor mounting location 1) V=0 means no motor

Ordering example

LP/C—AC2—B320—L320—V12—ML—2—500—900

Lifter type: LP/C	**Conveyor type of lifter:** AC2	**Workpiece pallet width:** Bwt=320	**Workpiece pallet length:** Lwt=320
Rated speed: 12 m/min	**Motor mounting location:** ML(Middle-Left)	**Quantity of workpiece pallet quantity to be lifted each cycle:** 2	
Bottom layer conveyor height-Top layer conveyor height: 500-900		**Special requirements:** None	

LP/X Stepping lifter

Dividing the stroke into multiple small units and implementing a stepped pallet conveying method to effectively reduce the cycle time.

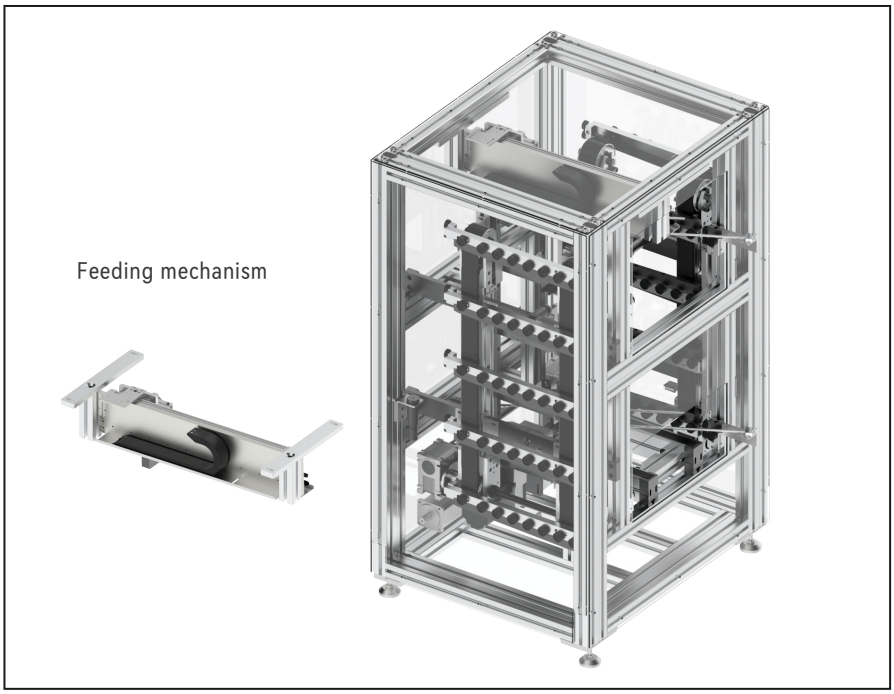

- Suitable for double layers conveyor system
- Support customizing the quantity of workpiece pallet to be conveyed for each cycle
- Permitted maximum load: 30kg
- Lift speed: ≤500mm/s
- Stroke must be an integer multiple of 200mm or 250mm
- Support customization
- Working principle:
  Multiple layers of inclined free rollers inside the lifter divide the stroke into a few steps. After finished workpiece pallet moving into the lifter through the free rollers by gravity, servo motor drive the layer going down one step in a short time, and the next workpiece pallet can continue move into the lifter. When workpiece pallet goes down to the last step, the powered timing belt conveyor convey the workpiece pallet out the lifter to the connected conveyor system.

Note: Default conveyor type for lifter is timing belt conveyor.

Delivery notes

Scope of delivery:

Stepping lifter
Servo motor(Including pulse type servo drive)
*Note: Default cable length between motor and drive is 5 meters.
Stepper motor(Including I/O type stepper drive)
Slot photoelectric sensor:
NPN (1pcs, with 2 meters wire)
Opposite photoelectric sensor:
NPN (3 pair, with 2 meters wire)
Proximity sensor:
NPN (2pcs, with 2 meters wire)
Safety pin
Acrylic protective cover

Condition on delivery:

Fully assembled

Recommended accessories:

Stopper
Two-position five-way dual control solenoid valve
Feeding mechanism (Must be used when workpiece pallet is conveyed from bottom layer to top layer)
Note: Two cylinders are used in the feeding mechanism, including 4pcs magnetic switches (2 wires type)

LP/X（With feeding mechanism）- Dimensions

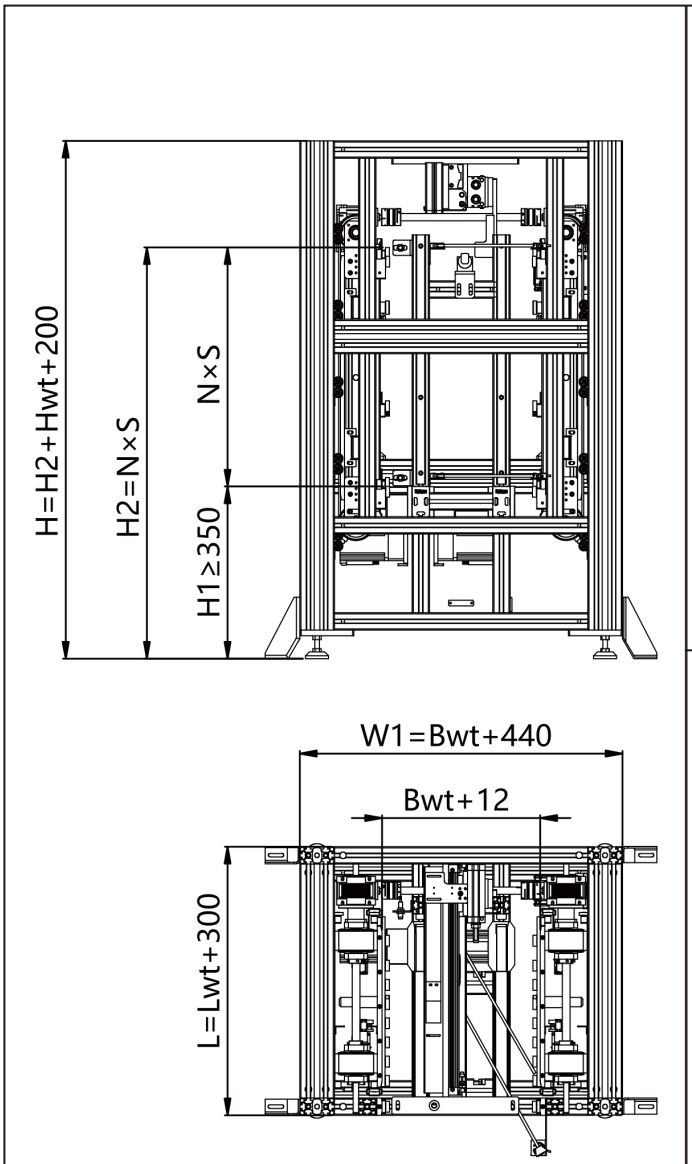

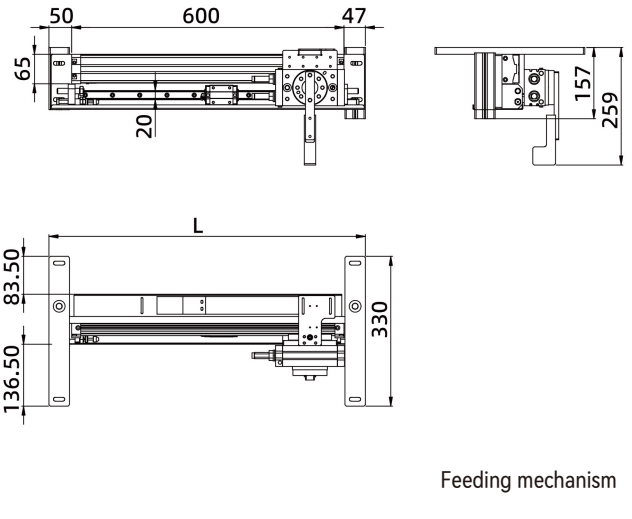

Feeding mechanism

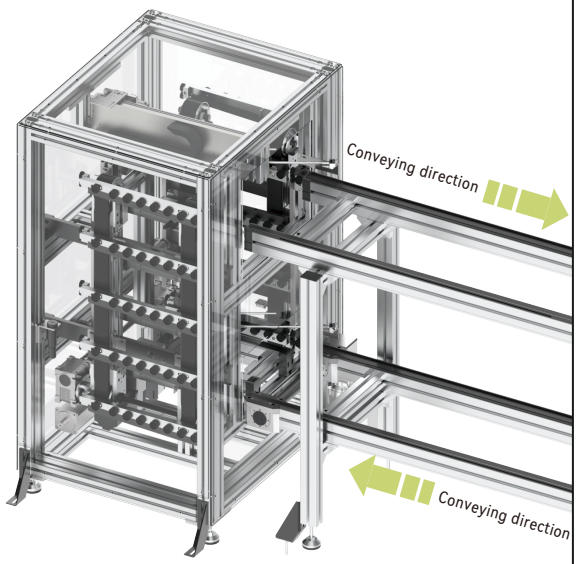

Application case

Note 1: Above specifications are for single workpiece pallet lifter.

Note 2: The stroke of stepping lifter must be an integer multiple of 200mm or 250mm.

Note 3: Default workpiece pallet height Hwt is 100mm.

When step distance is 200mm, workpiece pallet height Hwt cannot be over 100mm.

Note 4: To load or unload workpiece on lifter, please specify.

Note 5: To add a photoelectric safety protection device, please specify.

Note: To use the lifter. The minimum conveyor height is 350mm. And the maximum conveyor height is 1600mm.

N stand for the quantity of steps. S stand for step distance. And NxS is the stroke of lifter.

LP/X（Without feeding mechanism）- Dimensions

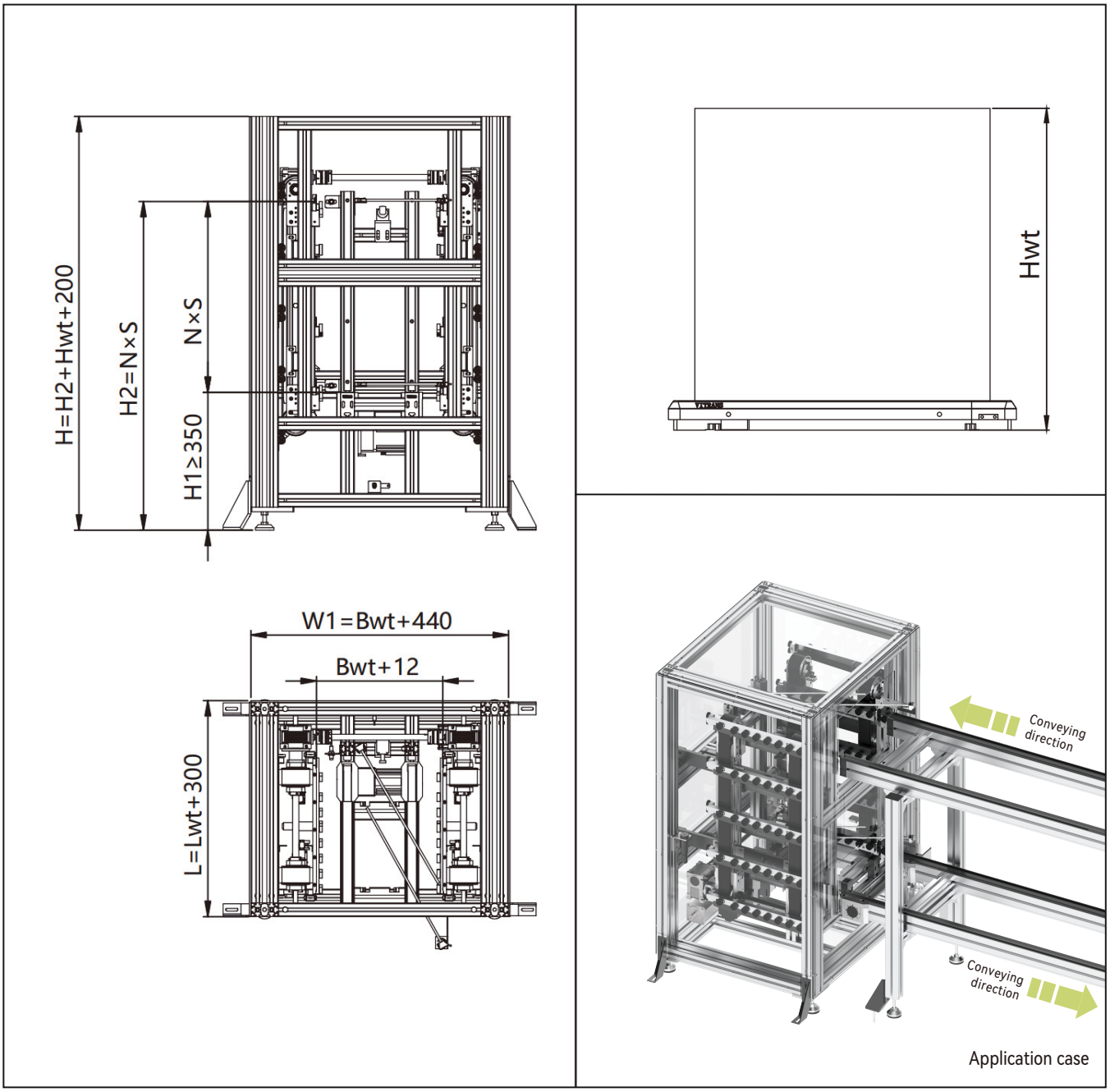

Note 1: Above specifications are for single workpiece pallet lifter.

Note 2: The stroke of stepping lifter must be an integer multiple of 200mm or 250mm.

Note 3: Default workpiece pallet height Hwt is 100mm.

When step distance is 200mm, workpiece pallet height Hwt cannot be over 100mm.

Note 4: To load or unload workpiece on lifter, please specify.

Note 5: To add a photoelectric safety protection device, please specify.

Note: To use the lifter. The minimum conveyor height is 350mm. And the maximum conveyor height is 1600mm.

N stand for the quantity of steps. S stand for step distance. And NxS is the stroke of lifter.

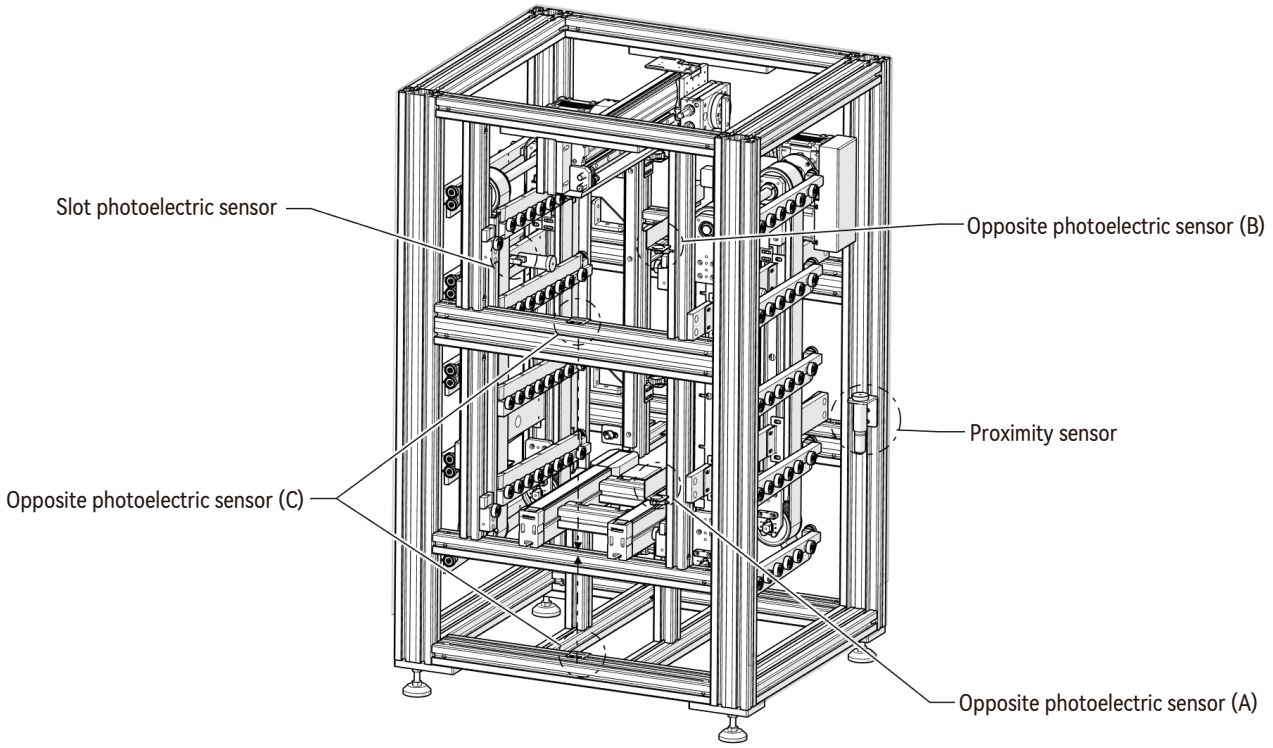

1.Slot photoelectric sensor: For origin point detection, provide reference position signal to lifter.

2. Proximity sensor: For safety pin detection, determine safety pin is open or closed.

3.Opposite photoelectric sensor (A/B): To determine whether workpiece pallet has already stopped in position.

Opposite photoelectric sensor (C): To determine whether there is workpiece pallet on the connection point of lifter and conveyors before lifting.

Technical data

Workpiece pallet width(mm)*	Bwt	160,240,320,400,480,560,640(Support customization;)
Workpiece pallet length(mm)*	Lwt	160,240,320,400,480,560,640(Support customization;)
Conveyor length(mm)*	L	L=Lwt+150
Permitted maximum load(kg)*		30
Permitted maximum of each step(kg)*		10
Step distance*		200,250
Height range*		350 ≤ Height of top and bottom conveyors < 1600
Lift speed(mm/s)*	V	≤500
Rated speed of conveyor(m/min)*		0,6,9,12,15,18(V=0 means no motor. Support customizing other speed;)
Lift motor type*		Servo motor(Including pulse type servo drive)
Conveyor motor type*		Stepper motor(Including I/O type stepper drive)
Motor mounting location*	MA	ML(Middle-left), MR(Middle-right)
Working voltage of servo motor*	U	**AC:** 220V(Single phase)
Working voltage of stepper motor*	U	**DC:** 48V 3.8A(Support customizing other working voltage;)
Working frequency*	f	50Hz

Technical data of feeding mechanism

Execution cylinder bore diameter(mm)*	25
Rotate cylinder bore diameter(mm)*	50
Push force(N)*	120
Working air pressure of cylinder*	0.4 ~ 0.8 MPa

Ordering information

LP/X	**Lifter type:** LP/X
▢	**Conveyor type of lifter:** BC2 / AC2
B ▢	**Workpiece pallet width:** 160 / 240 / 320 / 400 / 480 / 560 / 640 / customized
L ▢	**Workpiece pallet length:** 160 / 240 / 320 / 400 / 480 / 560 / 640 / customized
V ▢	**Rated speed:** 0 1) / 6 / 9 / 12 / 15 / 18 / customized
▢	**Motor mounting location:** ML(Middle-left), MR(Middle-right)
▢	**Quantity of workpiece pallet quantity to be lifted each cycle**
▢ – ▢	**Bottom layer conveyor height-Top layer conveyor height**
▢	**Stepper distance:** 200mm or 250mm
▢	**Conveying direction:** Down(Convey workpiece pallet from top conveyor to bottom conveyor) Up(Convey workpiece pallet from bottom conveyor to top conveyor) (Note: When conveying direction is UP, a feed mechanism must be used)
SP	**Special requirements:** a.Working voltage b.Working frequency c.Motor connection d.Motor mounting location e.Other motor type 1) V=0 means no motor

Ordering example

LP/X—BC2—B320—L320—V12—ML—2—500—900—200—Down

Lifter type: LP/X	**Conveyor type of lifter:** BC2	**Workpiece pallet width:** Bwt=320	**Workpiece pallet length:** Lwt=320
Rated speed: 12 m/min	**Motor mounting location:** ML(Middle-Left)	**Quantity of workpiece pallet quantity to be lifted each cycle:** 2	
Bottom layer conveyor height-Top layer conveyor height: 500-900		**Stepper distance:** 200	**Conveying direction:** Down
Special requirements: None			

09

Transportation control

The modular units for transportation control are used to stop workpiece pallet or detect workpiece pallet location.

SG——Pneumatic stopper

SG/D-60——Pneumatic stopper
SG/D-150——Pneumatic stopper
SG/D-200——Pneumatic stopper
Stopper is used to stop and separate workpiece pallets in work station.

SG/V——Double acting damper
Damper is used to stop workpiece pallet when it is conveyed to the longitudinal conveyor by lift and transfer unit.

SG/L——Slide stopper
The slide stopper is used with lift and transfer unit to divert workpiece pallet to different longitudinal conveyors.

SG/R——Return stopper
The return stop prevents the rebound impact of the workpiece pallet from the stopper.

WB2 —— Rocker
The rocker is used for area monitoring. It can also be used as a damper.

ST2 —— Stop block
The stop block is used individually or together with damper to stop workpiece pallet when it is conveyed to the longitudinal conveyor by lift and transfer unit.

ZJ/S——Proximity sensor bracket
It is used to fix an M12 sensor in place for lateral sensing of the workpiece pallet position.

ZJ/U——Proximity sensor bracket
It is used to fix an M12 sensor for inquiry of the workpiece pallet position from below.

ZJ/UV——Proximity sensor bracket
It is used to fix an M12 sensor on SG stopper for inquiry of the workpiece pallet position from below.

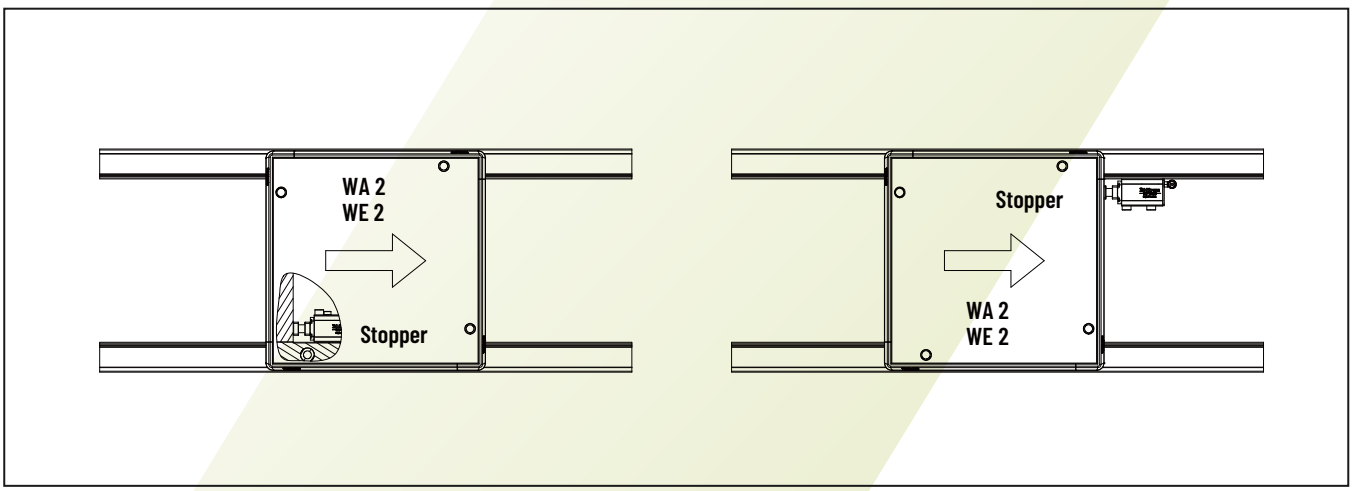

The stopper can be installed at left or right side of the conveyor. Installation space can be saved when stopper is installed at the right side of conveyor to stop workpiece inner edge.

SG Pneumatic stopper

After the compressed air is released, the stopper is held by in the blocking position by a spring to stop workpiece pallets.



- Pneumatic stopper
- Installed at the inner side of conveyor section
- Reversible operation not possible
- Suitable for WA2 and WE2 workpiece pallet
- Note: Workpiece pallets may arch up when turning on the conveyor if the quantity of accumulated workpiece pallet is over 3 pieces. This phenomenon can be solved by reducing the accumulated workpiece pallet quantity.

Delivery notes

Scope of delivery:

SGPneumatic stopper
Assembly kit
Air connector(L type-ϕ6)

Condition on delivery:

Fully assembled

Recommended accessories:

Proximity sensor(M12)
Proximity sensor bracket
Two-position three-way solenoid valve
Throttle valve(ϕ6)

SG - Dimensions

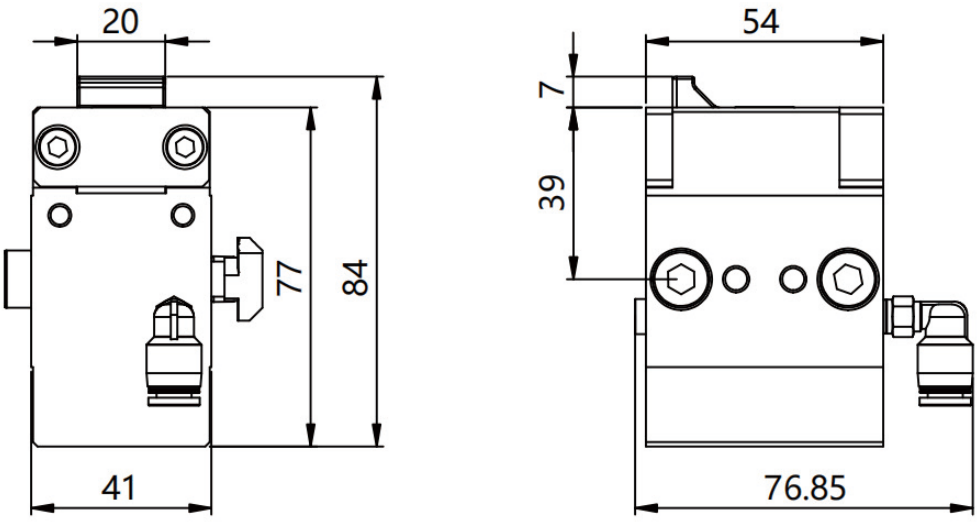

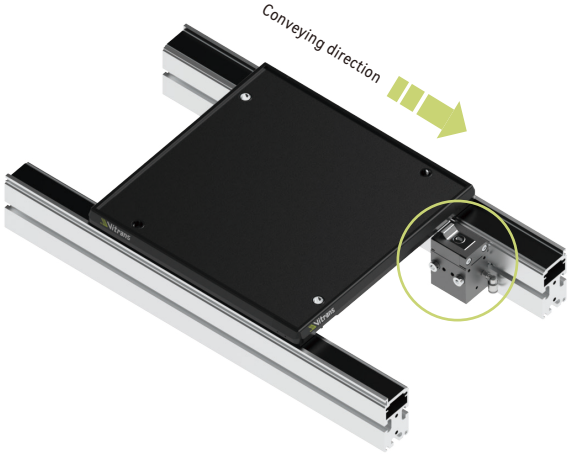

Stop workpiece pallet outer edge

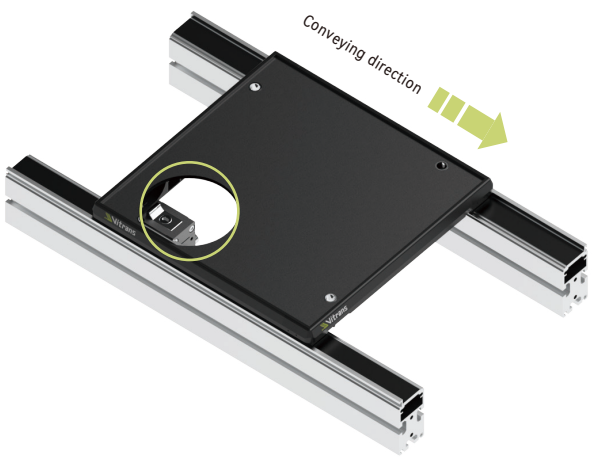

Stop workpiece pallet inner edge

Product description	Stopper
Model	SG.PN.0102

Permitted load of stopper under different conveying speed:

Permitted workpiece pallet weight M (kg)	Rated speed V (m/min)
160	6
110	9
90	12
70	15
50	18
35	24

Circuit diagram:

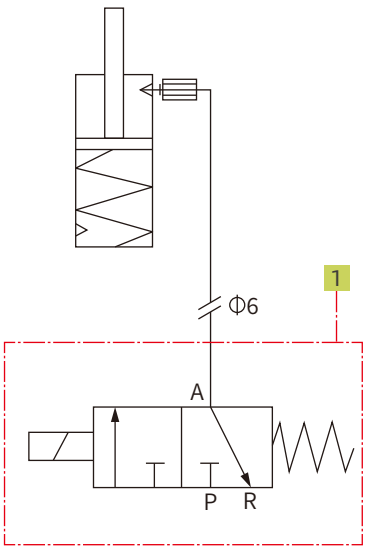

Note: 1 not in scope of delivery

SG/D-60 Pneumatic stopper

The stopper is used to stop workpiece pallets at designated position.



Delivery notes

Scope of delivery:

Pneumatic stopper
Assembly kit
Air connector(L type-ϕ6)

Condition on delivery:

Fully assembled

Recommended accessories:

Proximity sensor(M12)
Proximity sensor bracket
Two-position three-way solenoid valve
Throttle valve(ϕ6)

- Pneumatic stopper
- Damping force can reduce the impact on workpiece pallet
- Continuously adjustable damping
- Suitable for WA2 and WE2 workpiece pallet
- Damping force only act on the first accumulating workpiece pallet
- Single acting stopper, The push rod cannot retract actively
- Note: Workpiece pallets may arch up when turning on the conveyor if the quantity of accumulated workpiece pallet is over 3 pieces. This phenomenon can be solved by reducing the accumulated workpiece pallet quantity.

SG/D-60 - Dimensions

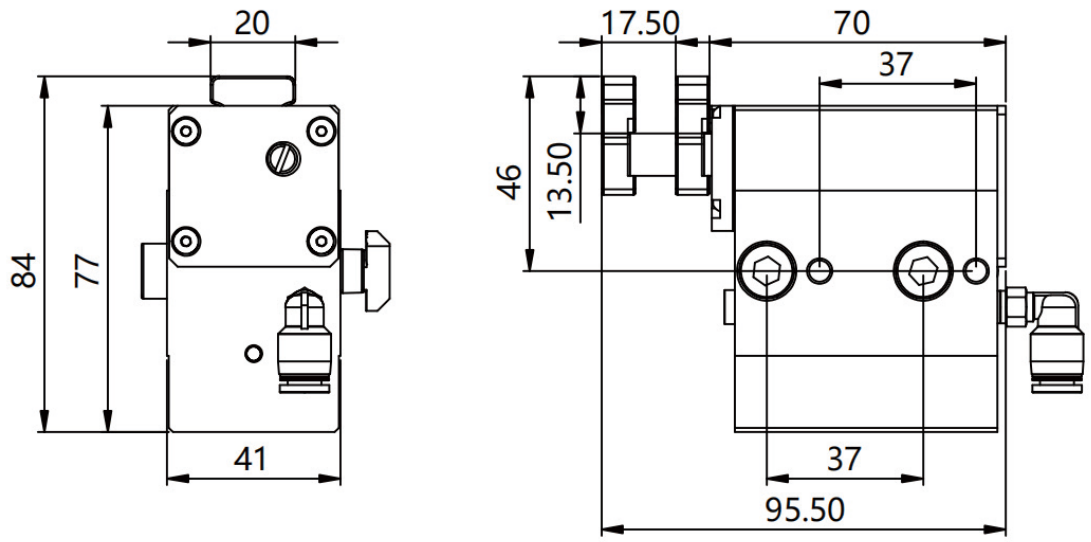

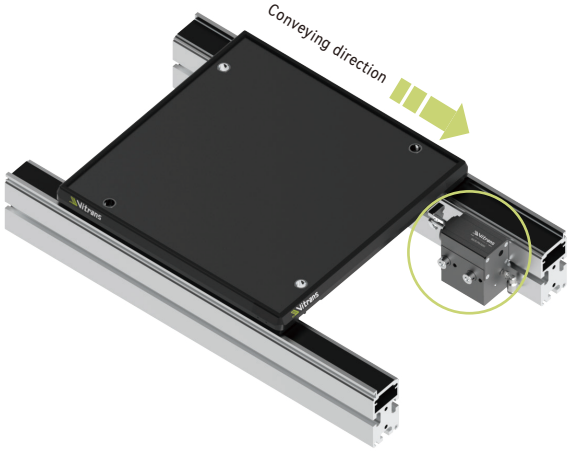

Stop workpiece pallet outer edge

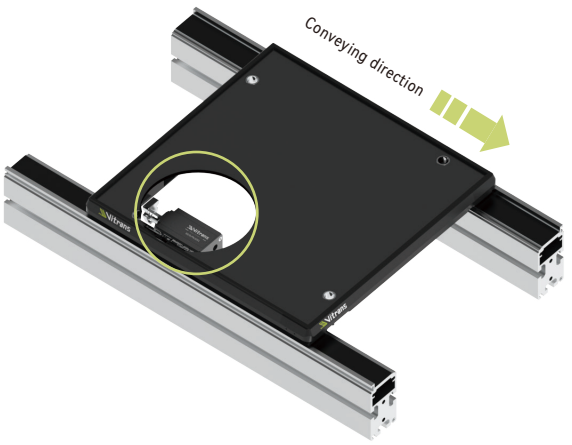

Stop workpiece pallet inner edge

Product description	Pneumatic stopper
Model	SG/D.PN.0201

Permitted load of stopper under different conveying speed:

Permitted workpiece pallet weight M (kg)	Rated speed V (m/min)
60	6
40	9
35	12
30	15
30	18
24	24

Note 1: In order to use the stopper normally, the mass of the workpiece pallet must not be less than 2.5 kg when the conveying speed is 6 m/min.
Note 2: The push rod of stopper may not return to the origin position and the workpiece pallet cannot be stopped at the specified position when the mass of the workpiece pallet is less than 2.5 kg.

Circuit diagram:

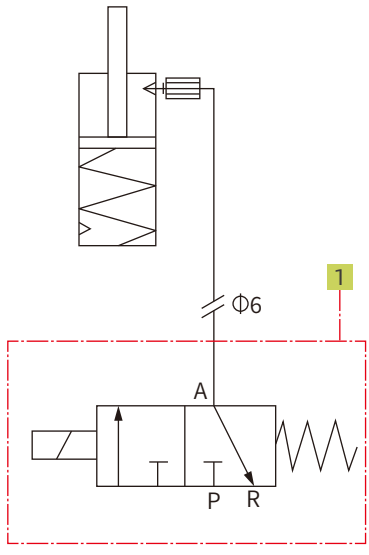

Note: 1 not in scope of delivery

SG/D-150 Pneumatic stopper

The stopper is used to stop workpiece pallets at designated position.

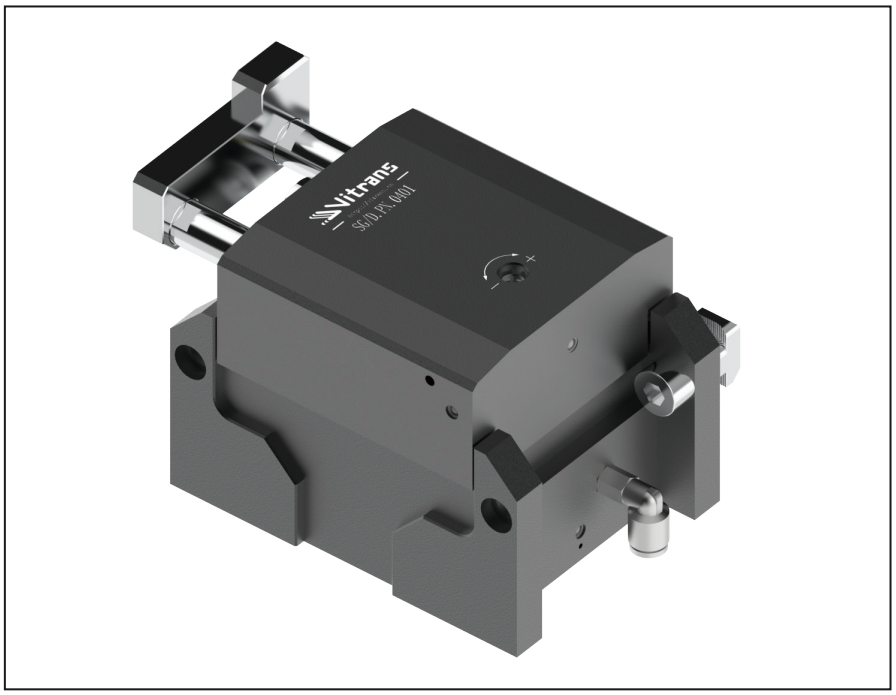

Delivery notes

Scope of delivery:

Pneumatic stopper
Assembly kit
Air connector(L type-ϕ6)

Condition on delivery:

Fully assembled

Recommended accessories:

Proximity sensor(M12)
Proximity sensor bracket
Two-position three-way solenoid valve
Throttle valve(ϕ6)

- Pneumatic stopper
- Damping force can reduce the impact on workpiece pallet
- Continuously adjustable damping
- Suitable for WA2 and WE2 workpiece pallet
- Damping force only act on the first accumulating workpiece pallet
- Single acting stopper, The push rod cannot retract actively
- Note: Workpiece pallets may arch up when turning on the conveyor if the quantity of accumulated workpiece pallet is over 3 pieces. This phenomenon can be solved by reducing the accumulated workpiece pallet quantity.

SG/D-150 - Dimensions

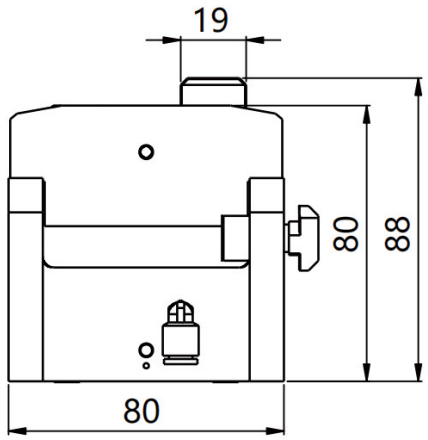

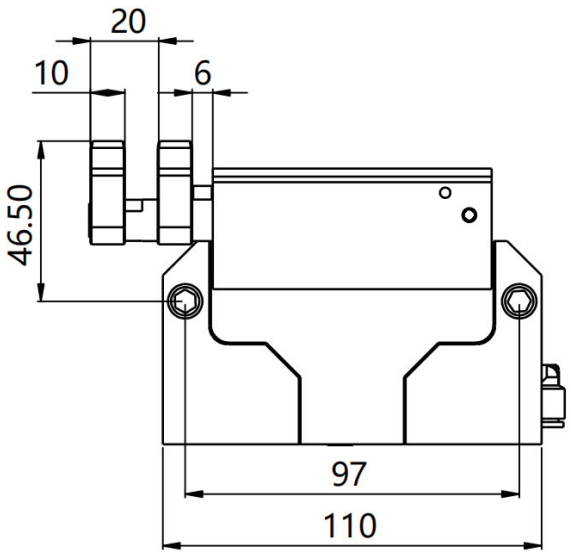

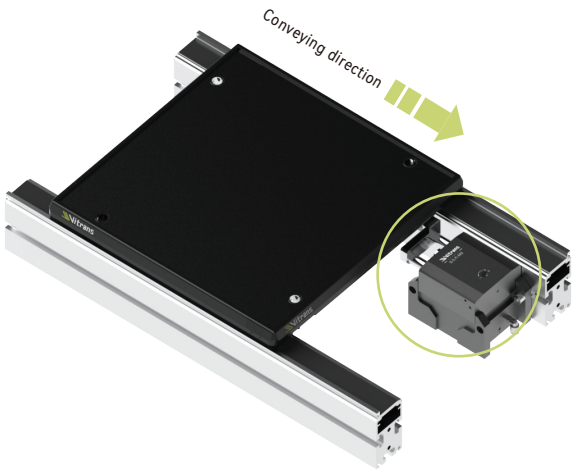

L- Stop workpiece pallet outer edge

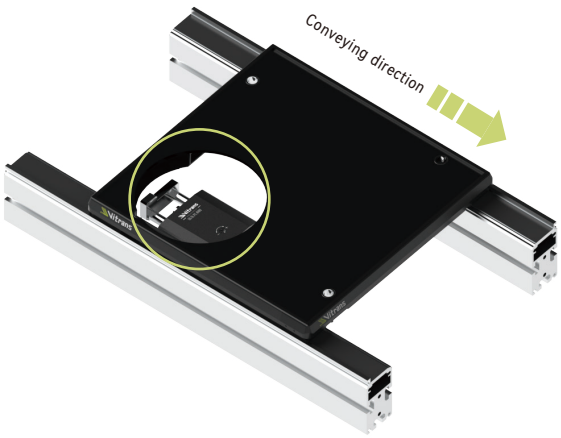

R- Stop workpiece pallet inner edge

Product description	Pneumatic dampened stopper
Model	SG/D.PN.0401-L(Stop workpiece pallet outer edge)
	SG/D.PN.0401-R(Stop workpiece pallet inner edge)

Permitted load of stopper under different conveying speed:

Permitted workpiece pallet weight M (kg)	Rated speed V (m/min)
150	6
120	9
105	12
90	15
70	18
55	24

Note 1: In order to use the stopper normally, the mass of the workpiece pallet must not be less than 8 kg when the conveying speed is 6 m/min.
Note 2: The push rod of stopper may not return to the origin position and the workpiece pallet cannot be stopped at the specified position when the mass of the workpiece pallet is less than 8 kg.

Circuit diagram:

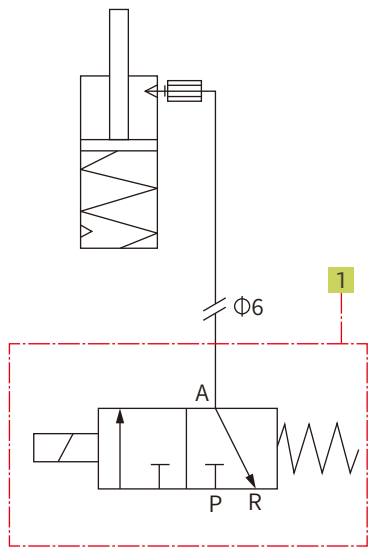

Note: 1 not in scope of delivery

SG/D-200 Pneumatic stopper

The stopper is used to stop workpiece pallets at designated position.

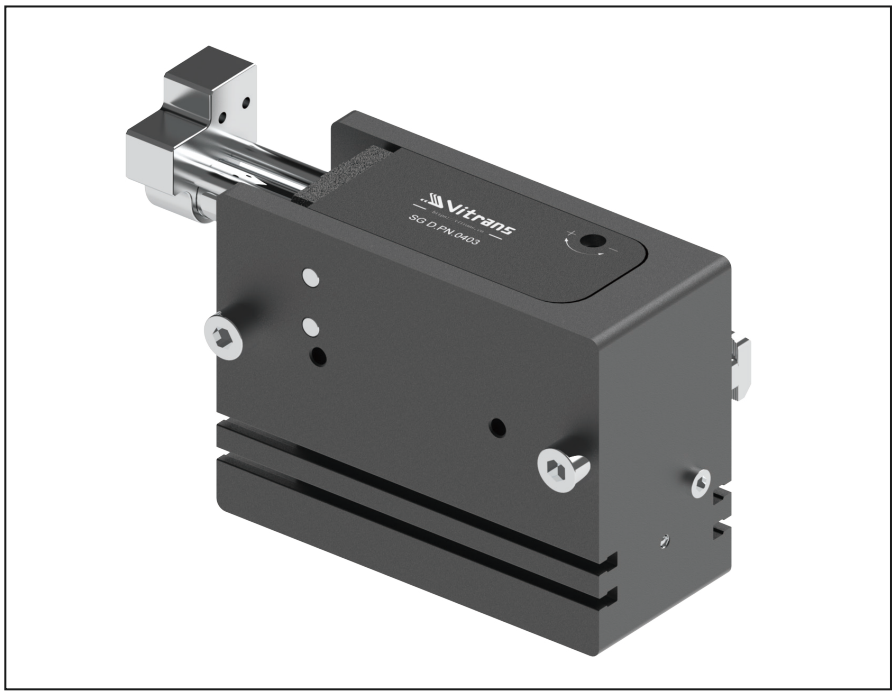

Delivery notes

Scope of delivery:

Pneumatic stopper
Assembly kit
Air connector(L type-ϕ6)

Condition on delivery:

Fully assembled

Recommended accessories:

Proximity sensor(M12)
Proximity sensor bracket
Two-position three-way solenoid valve
Throttle valve(ϕ6)

- Pneumatic stopper
- Damping force can reduce the impact on workpiece pallet
- Continuously adjustable damping
- Suitable for WA2 and WE2 workpiece pallet
- Damping force only act on the first accumulating workpiece pallet
- Single acting stopper, The push rod cannot retract actively
- Note: Workpiece pallets may arch up when turning on the conveyor if the quantity of accumulated workpiece pallet is over 3 pieces. This phenomenon can be solved by reducing the accumulated workpiece pallet quantity.

SG/D-200 - Dimensions

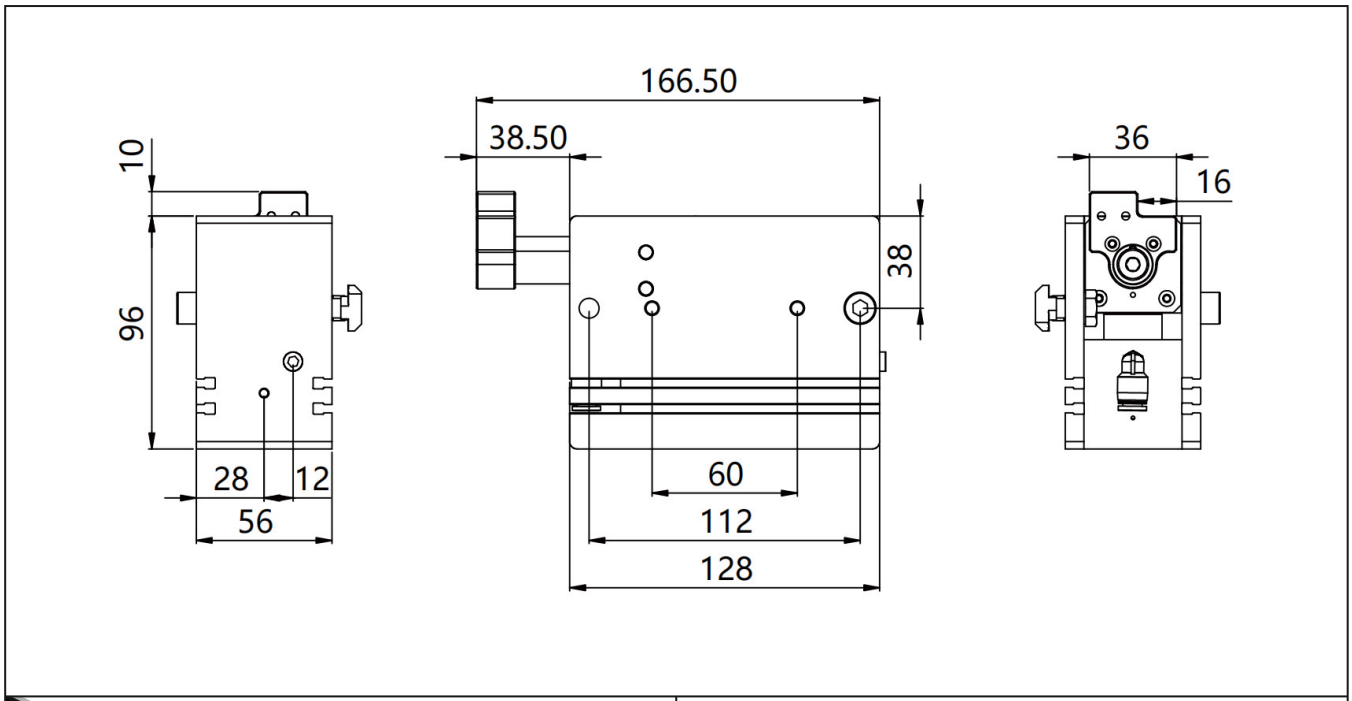

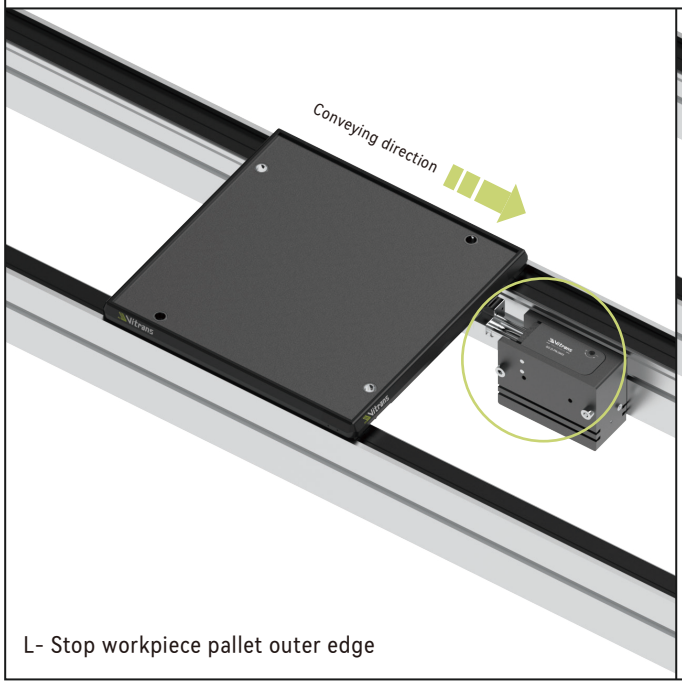

L- Stop workpiece pallet outer edge

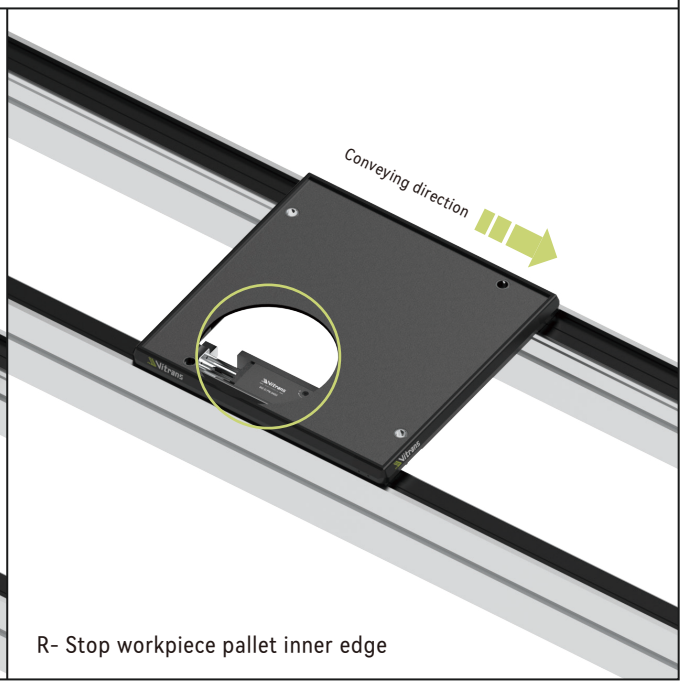

R- Stop workpiece pallet inner edge

Product description	Pneumatic dampened stopper
Model	SG/D.PN.0403-L(Stop workpiece pallet outer edge)
	SG/D.PN.0403-R(Stop workpiece pallet inner edge)

Permitted load of stopper under different conveying speed:

Permitted workpiece pallet weight M (kg)	Rated speed V (m/min)
200	6
140	9
100	12
100	15
100	18
55	24

Note 1: In order to use the stopper normally, the mass of the workpiece pallet must not be less than 2.5 kg when the conveying speed is 6 m/min.
Note 2: The push rod of stopper may not return to the origin position and the workpiece pallet cannot be stopped at the specified position when the mass of the workpiece pallet is less than 2.5 kg.

Circuit diagram:

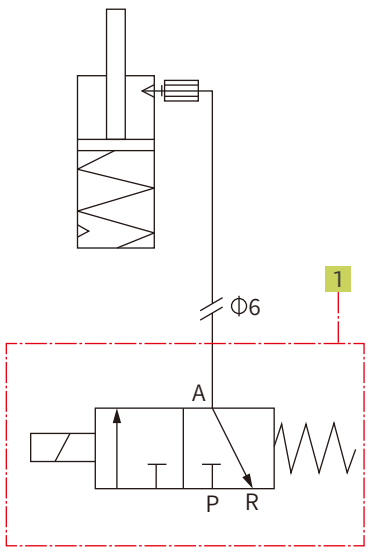

Note: 1 not in scope of delivery

SG/V Double acting damper

Stop workpiece pallet when it is conveyed to the longitudinal conveyor by lift and transfer unit.

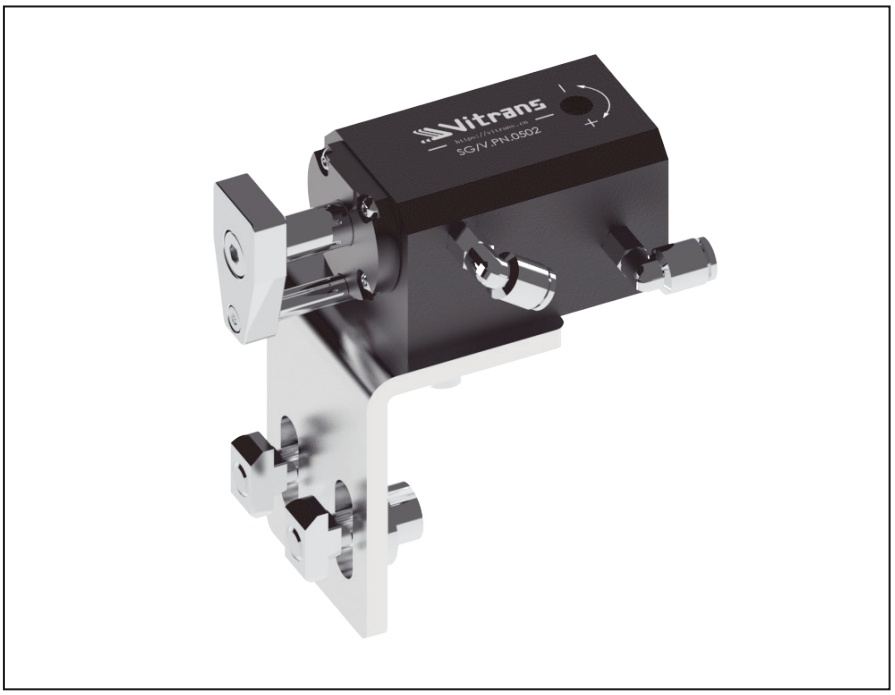

Delivery notes

Scope of delivery:
Double acting damper
Bracket and assembly kit
Air connector (L type-ϕ6)

Condition on delivery:
Fully assembled

Recommended accessories:
Proximity sensor (M12)
Proximity sensor bracket
Three-position five-way medium release solenoid valve
Throttle valve (ϕ6)

- Pneumatic dampened damper
- Damping force can reduce the impact on workpiece pallet
- Continuously adjustable damping
- Double acting stopper, The push rod can retract actively
- Suitable for WA2 and WE2 workpiece pallet
- Note: Damper is special designed for lift and transfer unit.

SG/V - Dimensions

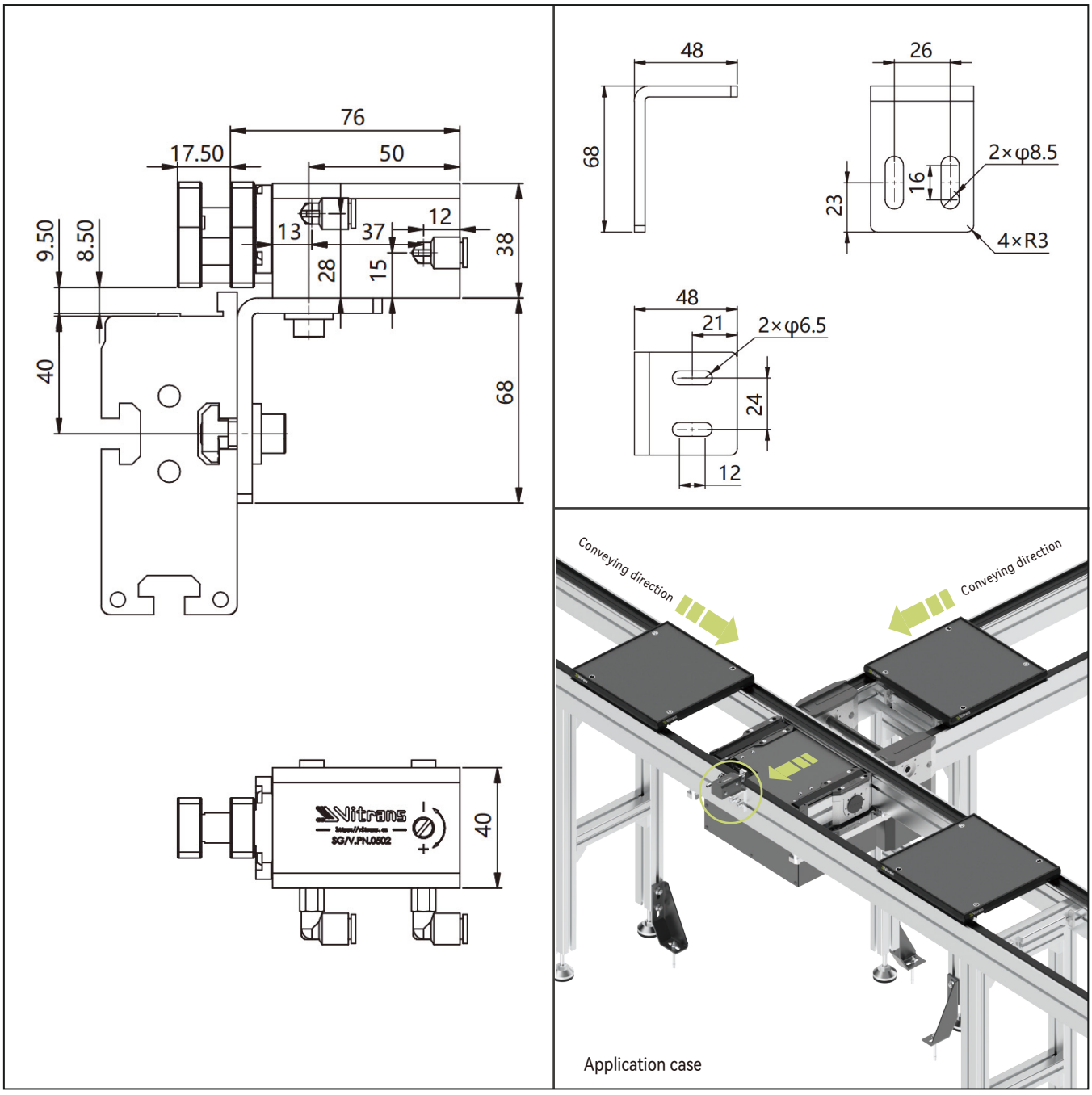

Product description	Double acting damper
Model	SG/V.PN.0502

Permitted load of stopper under different conveying speed:

Permitted workpiece pallet weight M (kg)	Rated speed V (m/min)
60	6
40	9
35	12
30	18
24	24

Note 1: In order to use the stopper normally, the mass of the workpiece pallet must not be less than 3.5 kg when the conveying speed is 6 m/min.
Note 2: The push rod of stopper may not return to the origin position and the workpiece pallet cannot be stopped at the specified position when the mass of the workpiece pallet is less than 3.5 kg.

Circuit diagram:

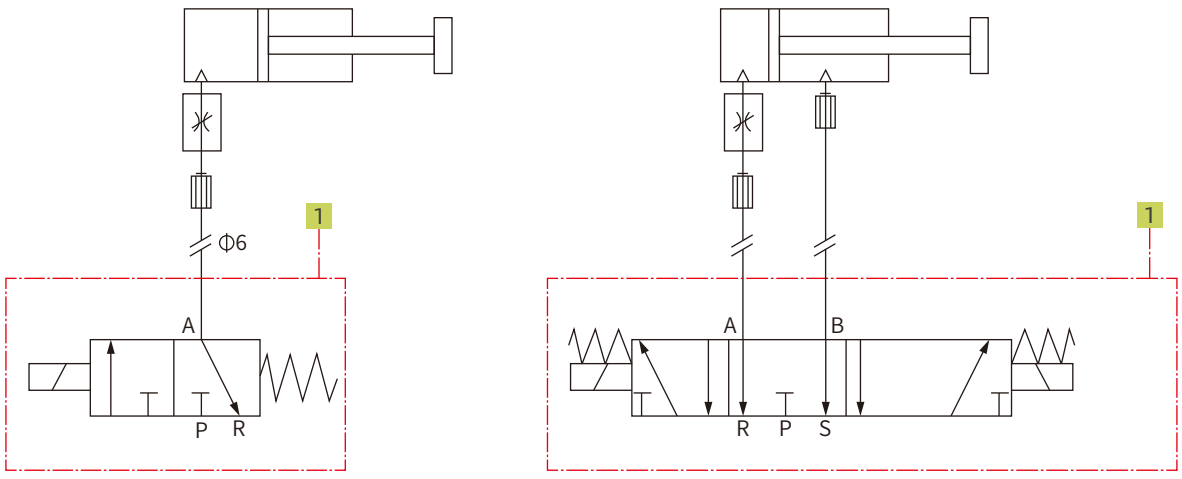

Note: 1 not in scope of delivery

SG/L Slide stopper

The slide stopper is used with lift and transfer unit to divert workpiece pallet to different longitudinal conveyors.

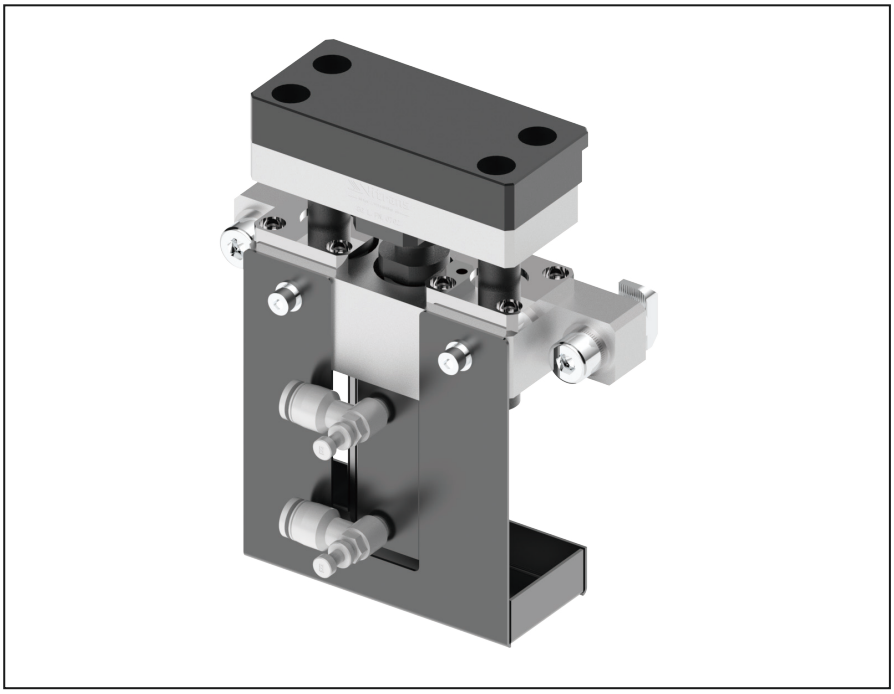

Delivery notes

Scope of delivery:

Slide stopper
Assembly kit
Throttle valve(ϕ6)
Magnetic switches: Two wires type
(with 500mm cable, without connector)

Condition on delivery:

Fully assembled

Recommended accessories:

Two-position three-way solenoid valve

- Double acting stopper, the stop block can be pushed up to stop workpiece pallet or pulled back to release workpiece pallet.
- Suitable for WA2 and WE2 workpiece pallet
- Note: Slide stopper is special designed for lift and transfer unit.

SG/L - Dimensions

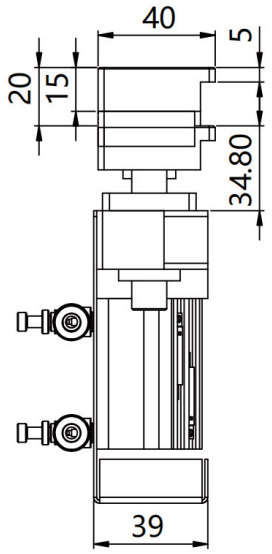

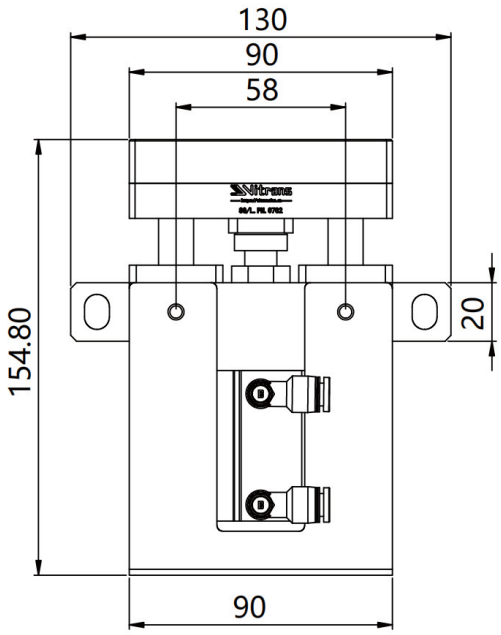

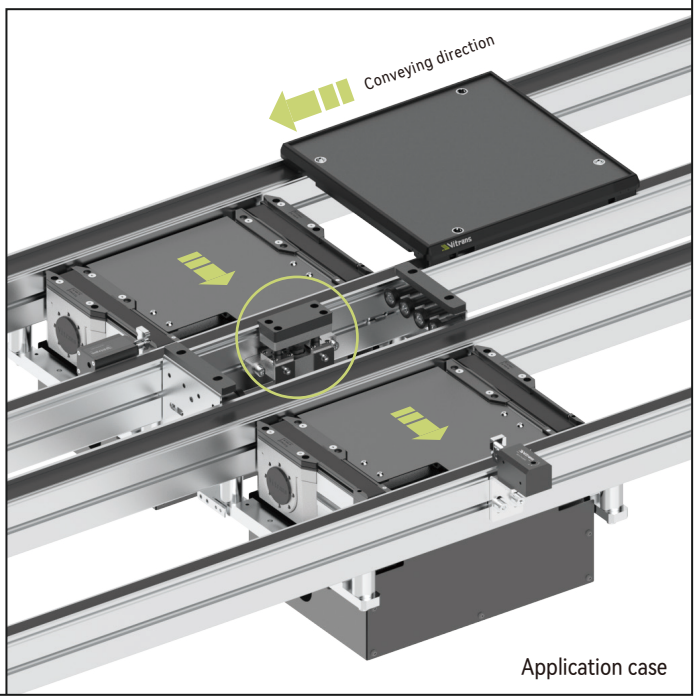

Application case

Product description	Slide stopper
Model	SG/L.PN.0702

Permitted load of stopper under different conveying speed:

Permitted workpiece pallet weight M (kg)	Rated speed V (m/min)
50	6
50	9
35	12
25	15
20	18

Circuit diagram:

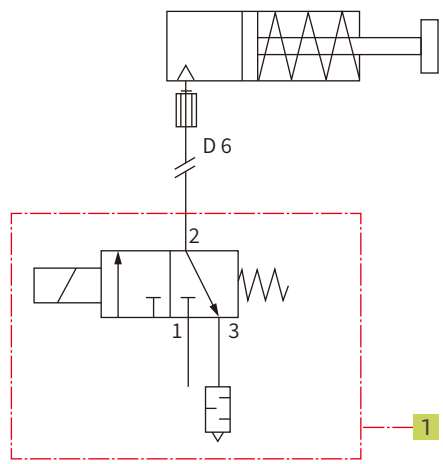

Note: 1 not in scope of delivery

SG/R Return stopper

The return stop prevents the rebound impact of the workpiece pallet from the stopper.



Delivery notes

Scope of delivery:

Return stopper

Assembly kit

Condition on delivery:

Fully assembled

Recommended accessories:

Pneumatic stopper

- Mechanical one-way stopper
- Suitable for WA2 and WE2 workpiece pallet
- Note: Plastic return stopper can be used for workpiece pallet weight less than 60kg.
  Steel return stopper can be used for workpiece pallet weight less than 200kg.

SG/R - Dimensions

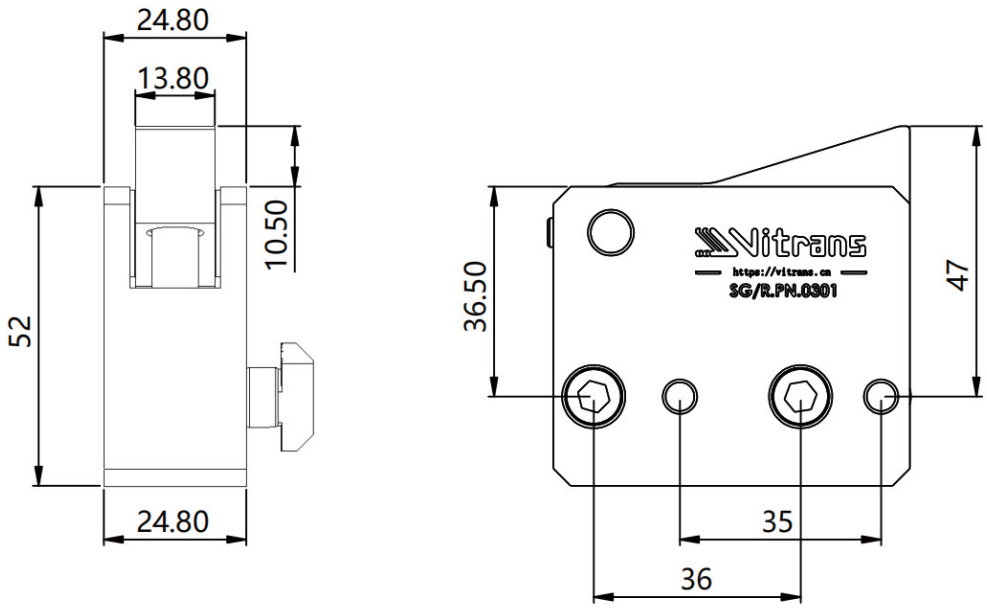

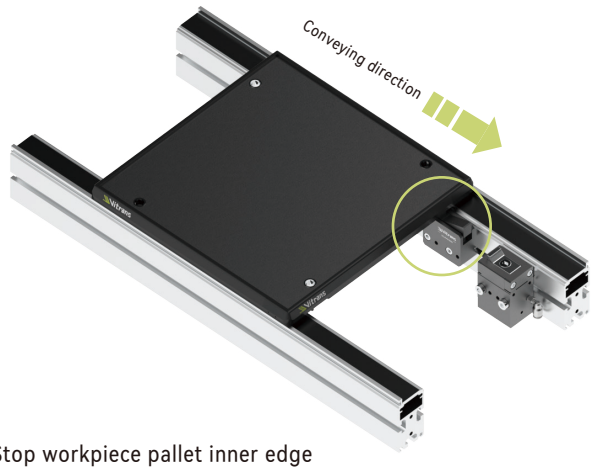

Stop workpiece pallet inner edge

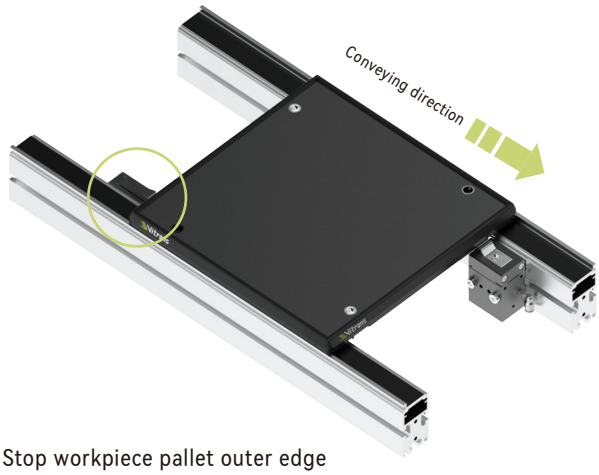

Stop workpiece pallet outer edge

Product description	Return stopper
Model	SG/R.PN.0301 (Plastic return stopper)
	SG/R.PN.0302 (Steel return stopper)

WB2 Rocker

The rocker is used for area monitoring. It can also be used as a damper.

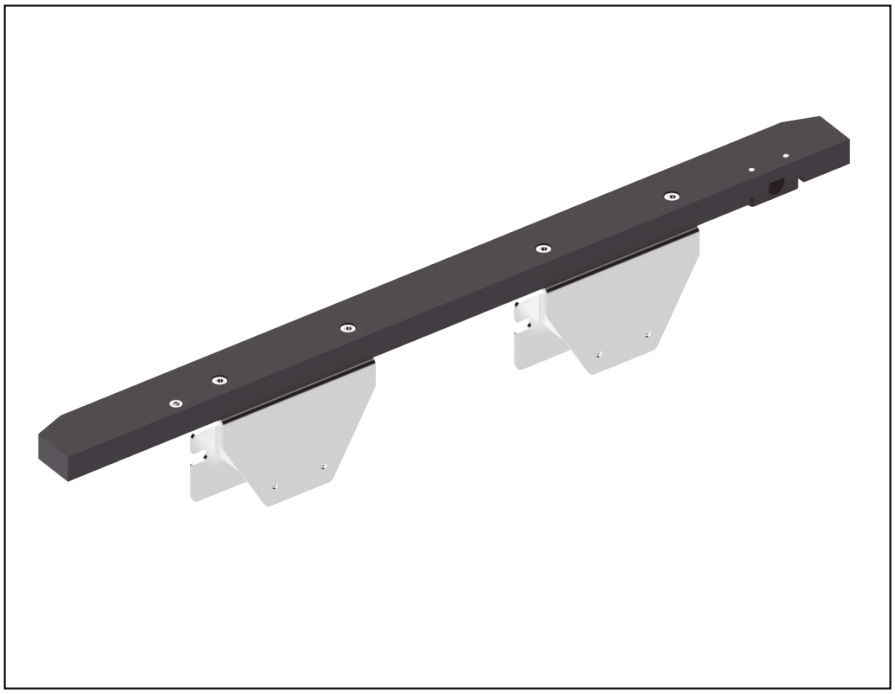

Delivery notes

Scope of delivery:

Rocker

Assembly kit

Condition on delivery:

Fully assembled

Recommended accessories:

Proximity sensor(M12)

Proximity sensor bracket

- Suitable for WA2 and WE2 workpiece pallet
- Stop workpiece pallet when it is conveyed to the longitudinal conveyor by lift and transfer unit.
- Spring force can reduce the impact on workpiece pallet
- Area monitoring, determine the presence of workpiece pallets
- Basic rocker is suitable for workpiece pallet length ≤ 480mm.
  The combination of two rockers can be used for workpiece pallet length > 480mm

WB2 - Dimensions

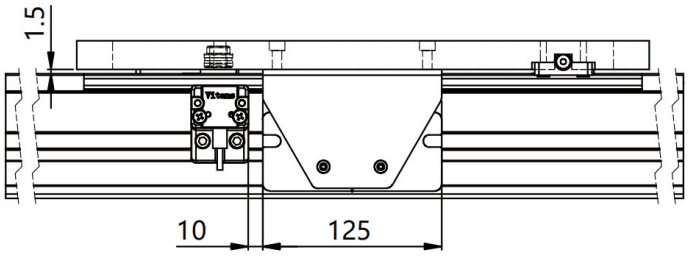

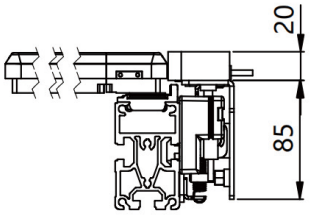

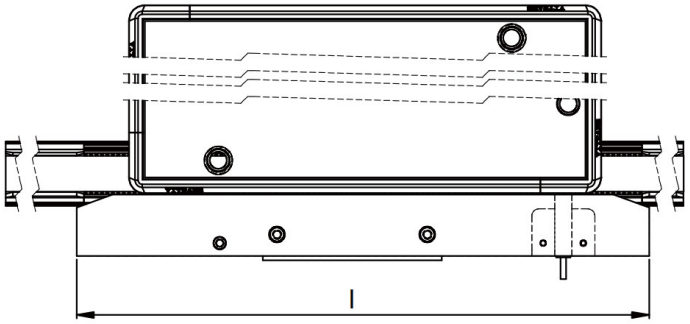

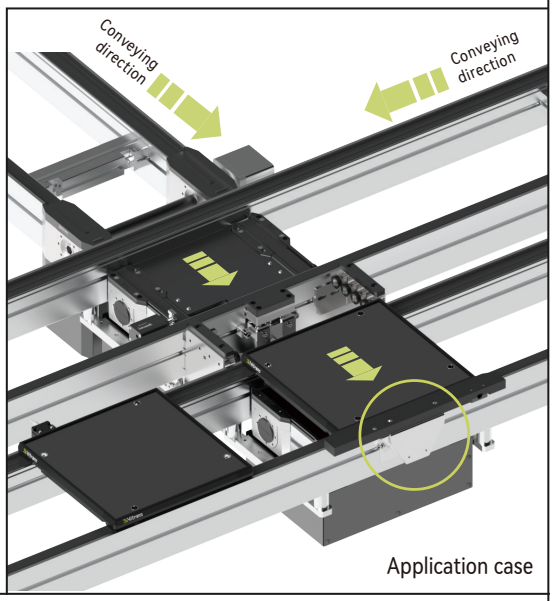

Application case

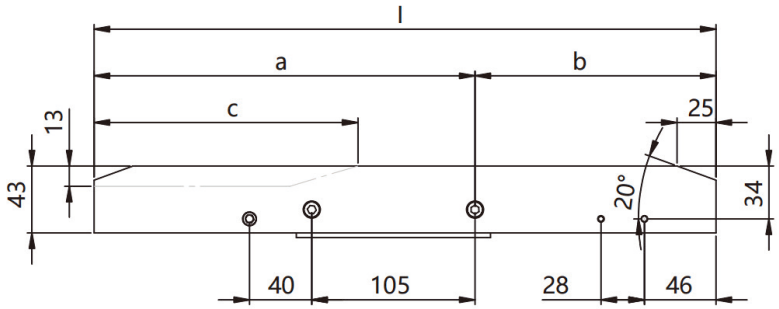

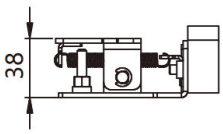

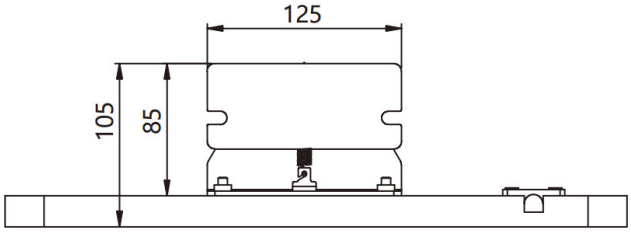

Note: Suitable for workpiece pallet length Lwt ≤ 480mm

WB2 - Dimensions

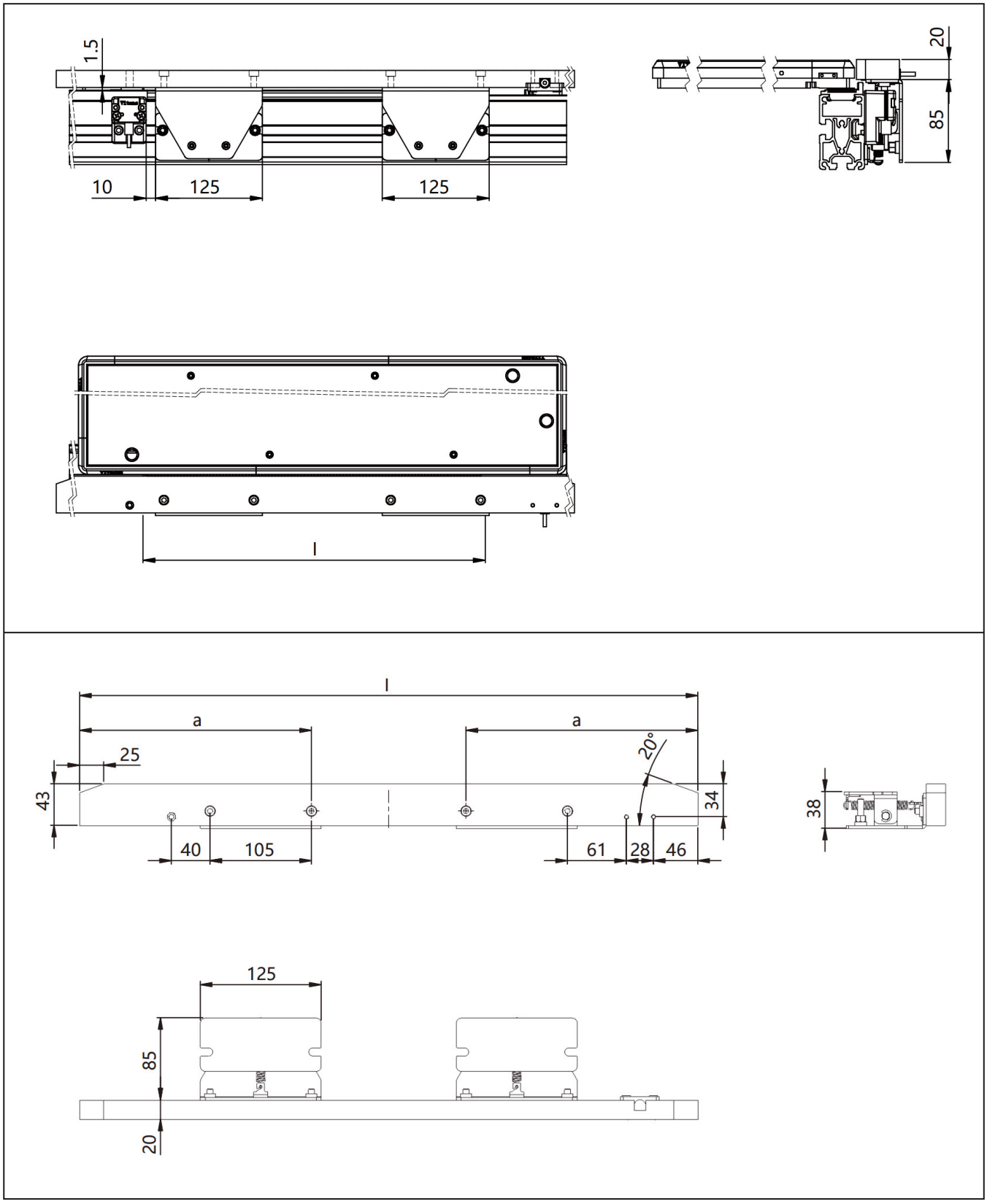

Note: Suitable for workpiece pallet length Lwt > 480mm

WB2 - Technical data

Workpiece pallet length Lwt	Dimension (mm) a	Dimension (mm) b	Dimension (mm) c	Dimension (mm) l	Permitted maximum load (kg)	Permitted minimum load (kg)	Area monitoring length (mm)
160	165	155	105	320	30	1.5	165
240	165	155	25	320	30	1.5	270
320	245	155	25	400	30	1.5	350
400	292.5	187.5	25	480	30	1.5	430
480	332.5	227.5	25	560	30	1.5	510
560	260	/	25	640	30	3	590
640	260	/	25	720	30	3	670
720	260	/	25	800	30	3	750
800	260	/	25	880	30	3	830

Note: Permitted load can be ignored when rocker is only used for area monitoring.

Ordering information

Product description	Rocker
Model	WB2-L160
	WB2-L240
	WB2-L320
	WB2-L400
	WB2-L480
	WB2-L560
	WB2-L640
	WB2-L720
	WB2-L800

ST2 Stop block

The stop block is used individually or together with damper to stop workpiece pallet when it is conveyed to the longitudinal conveyor by lift and transfer unit.

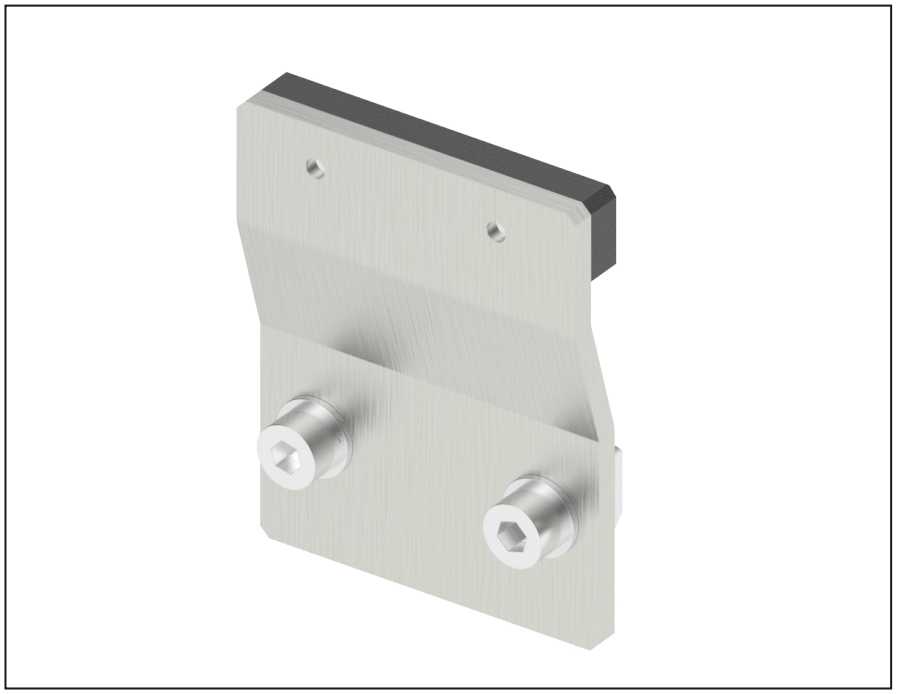

Delivery notes

Scope of delivery:
Stop block
Assembly kit

Condition on delivery:
Fully assembled

Recommended accessories:
Double acting damper
Proximity sensor (M12)
Proximity sensor bracket

- Suitable for WA2 and WE2 workpiece pallet
- Permitted maximum load: 30Kg
- Recommend to used it with damper to reduce the impact on workpiece pallet
- Note: Stop block is special designed for lift and transfer unit.
- For workpiece pallet size over 400mm, two stop blocks can be used.

ST2 - Dimensions

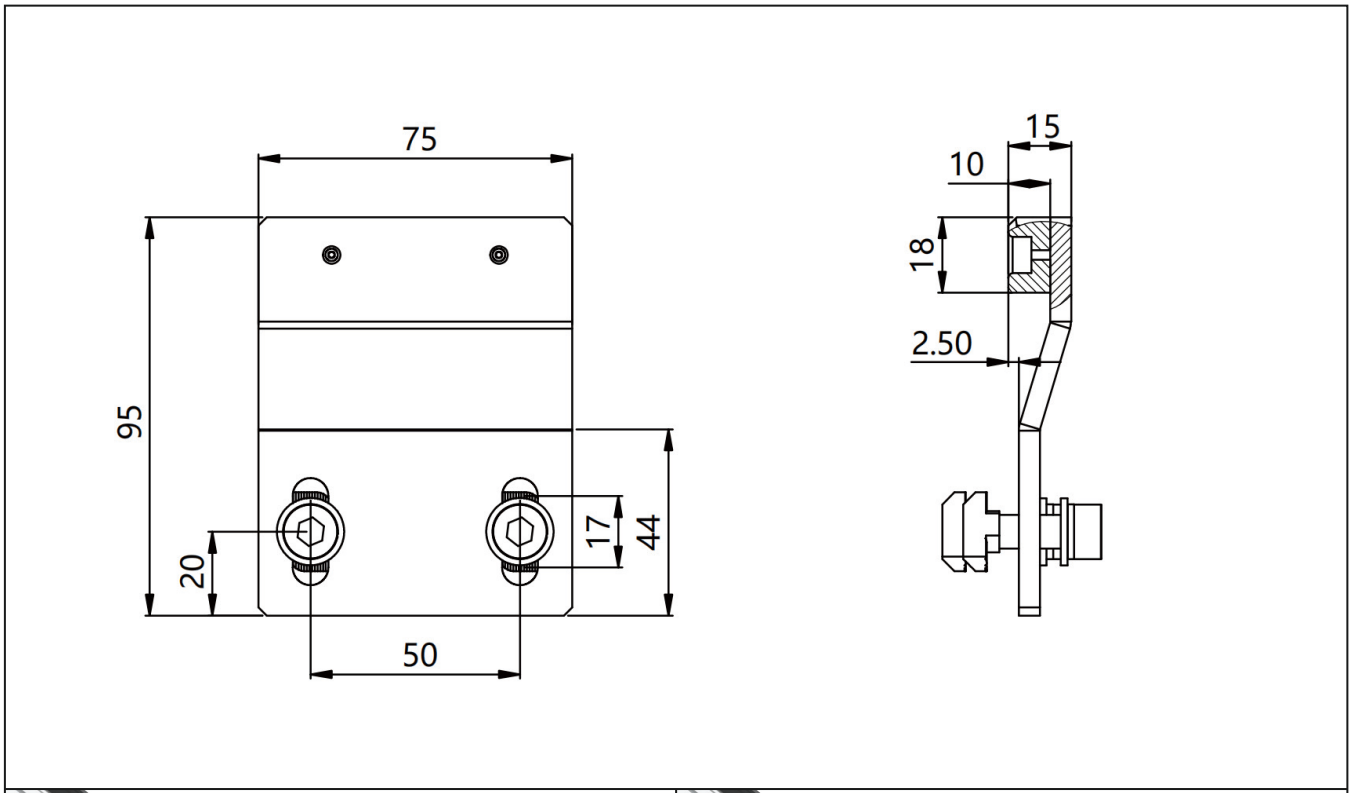

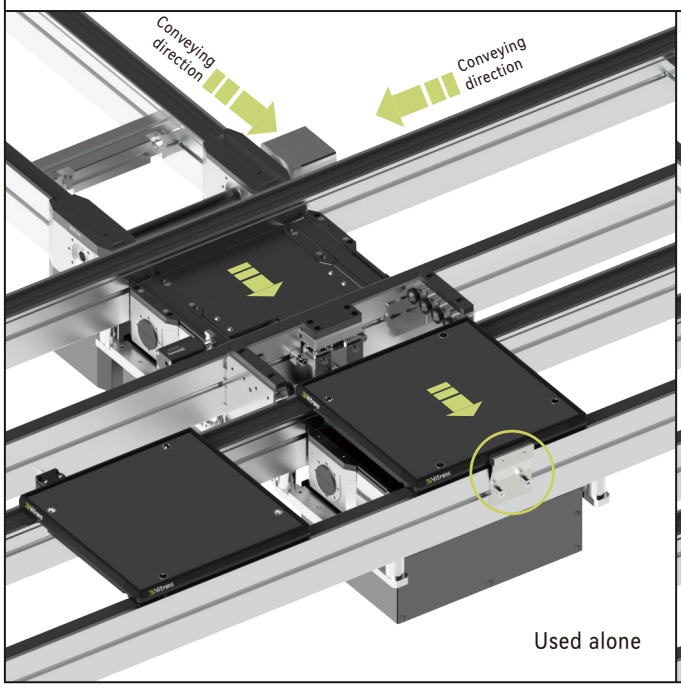

Used alone

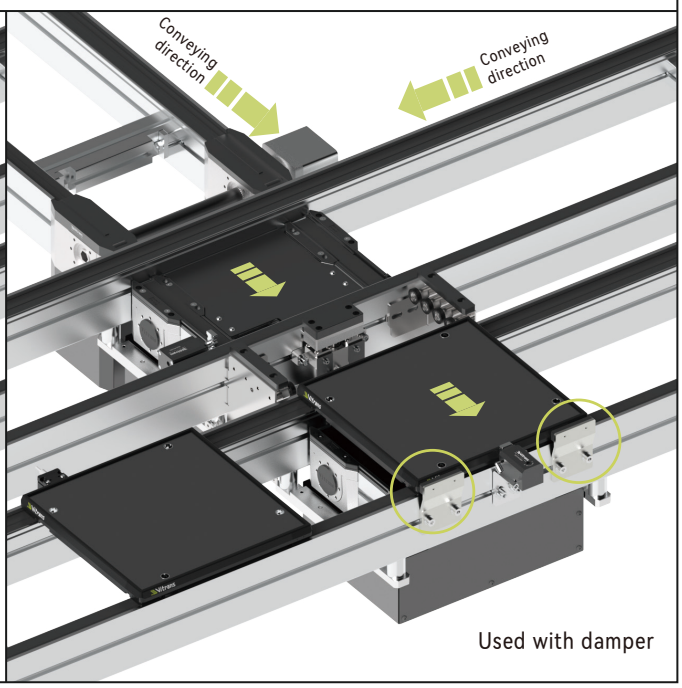

Used with damper

Product description	Stop block
Model	ST2.01.01

ZJ/S Proximity sensor bracket

It is used to fix an M12 sensor in place for lateral sensing of the workpiece pallet position.

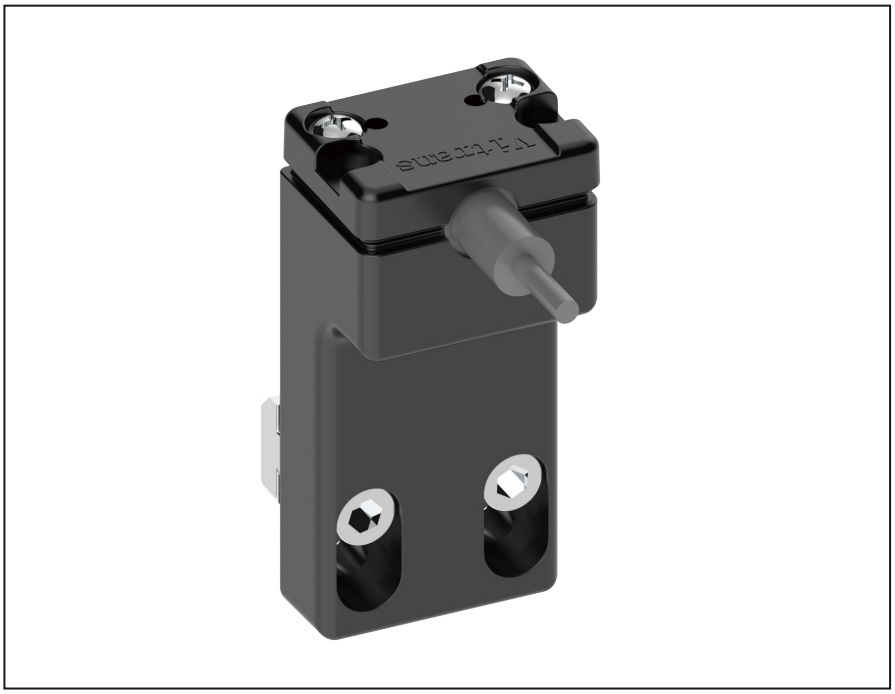

- Suitable for WA2 and WE2 workpiece pallet
- Suitable for M12 proximity sensor

Delivery notes

Scope of delivery:

Proximity sensor bracket

Assembly kit

Condition on delivery:

Full set

Recommended accessories:

Proximity sensor(M12)

ZJ/S - Dimensions

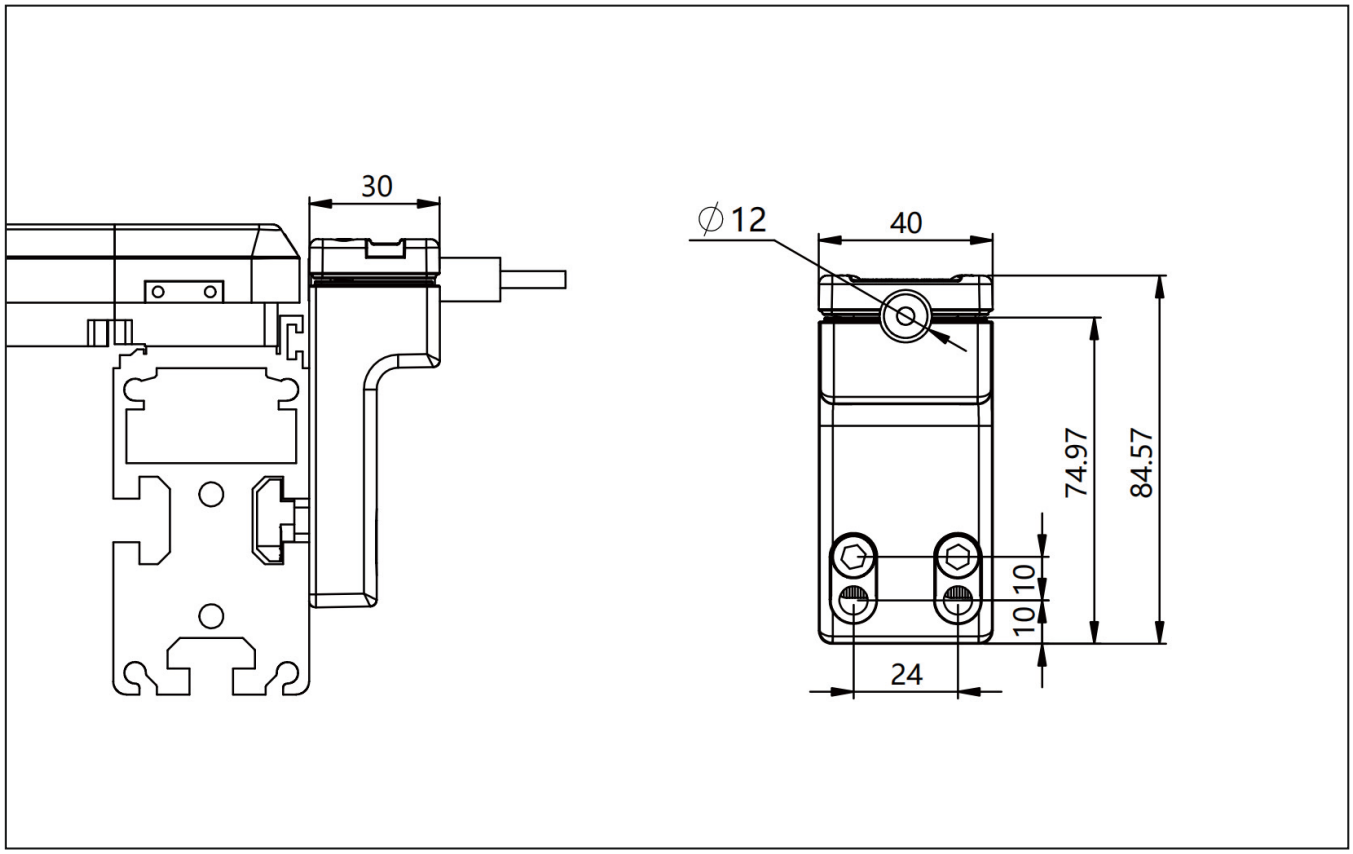

Product description	Proximity sensor bracket
Model	ZJ/S

ZJ/U Proximity sensor bracket

It is used to fix an M12 sensor on SG stopper for inquiry of the workpiece pallet position from below.

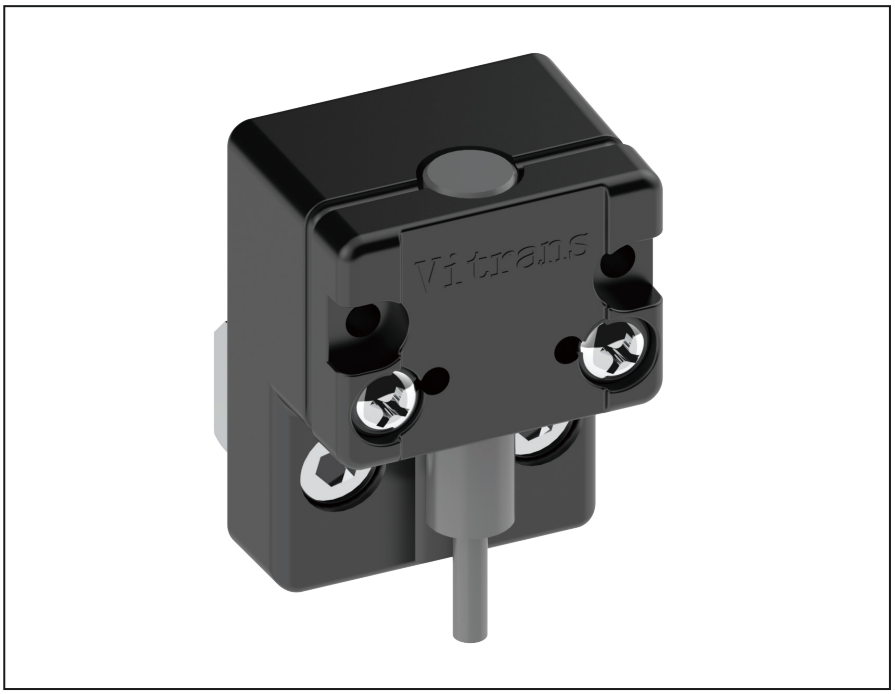

Delivery notes

Scope of delivery:
Proximity sensor bracket
Assembly kit

Condition on delivery:
Full set

Recommended accessories:
Proximity sensor(M12)

- Suitable for WA2 and WE2 workpiece pallet
- Suitable for M12 proximity sensor

ZJ/U - Dimensions

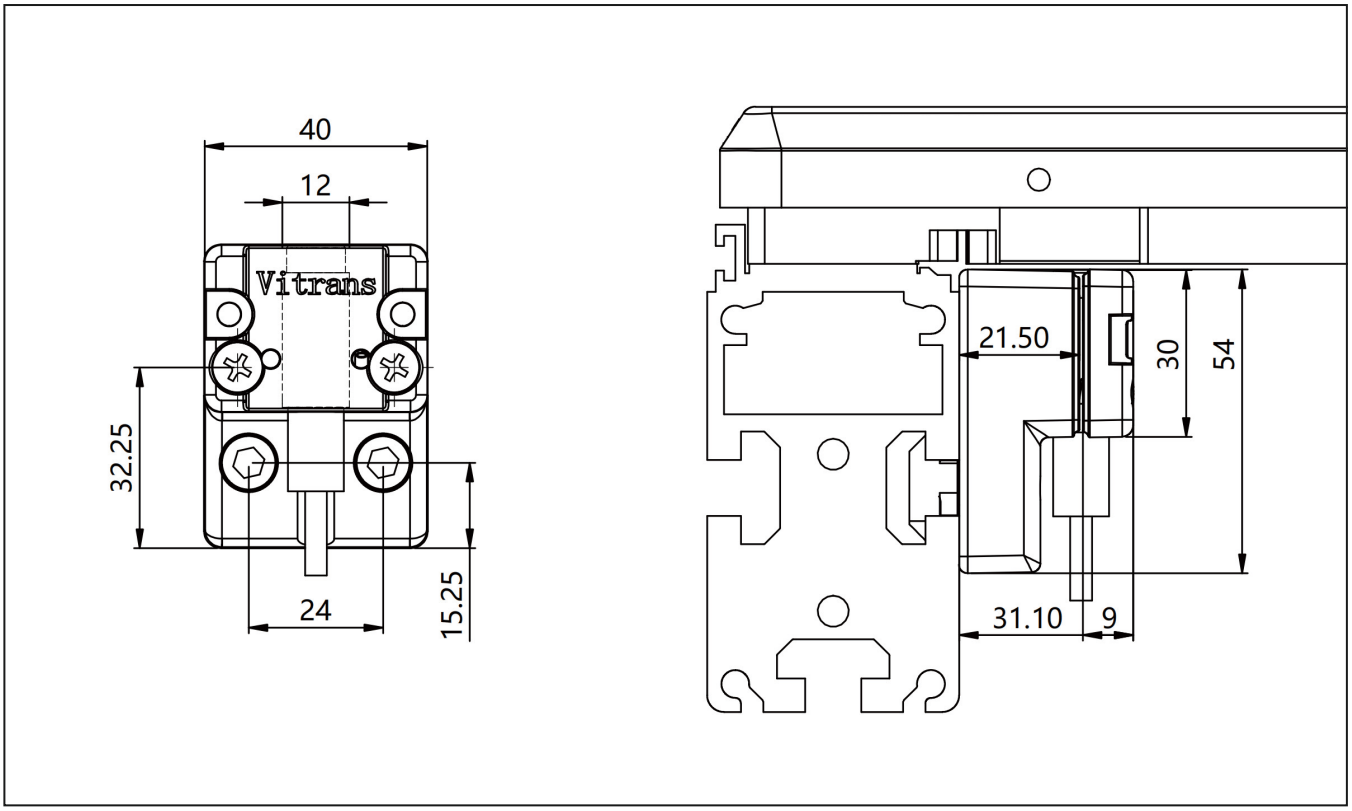

Product description	Proximity sensor bracket
Model	ZJ/U

ZJ/UV Proximity sensor bracket

It is used to fix an M12 sensor on SG stopper for inquiry of the workpiece pallet position from below.

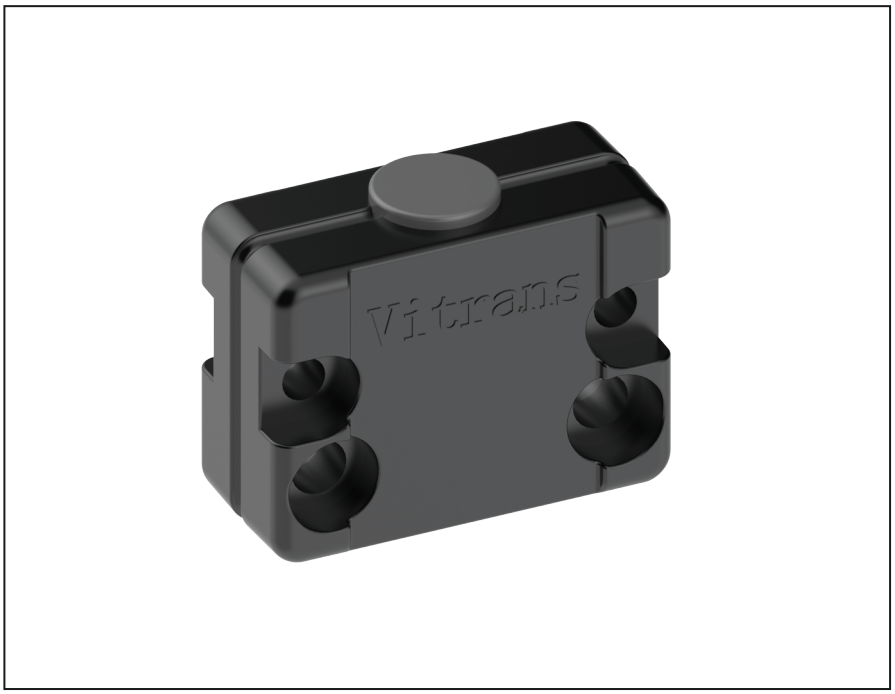

- Suitable for WA2 and WE2 workpiece pallet
- Suitable for M12 proximity sensor

Delivery notes

Scope of delivery:

Proximity sensor bracket
Assembly kit

Condition on delivery:

Full set

Recommended accessories:

Proximity sensor(M12)
SG Pneumatic stopper

ZJ/UV - Dimensions

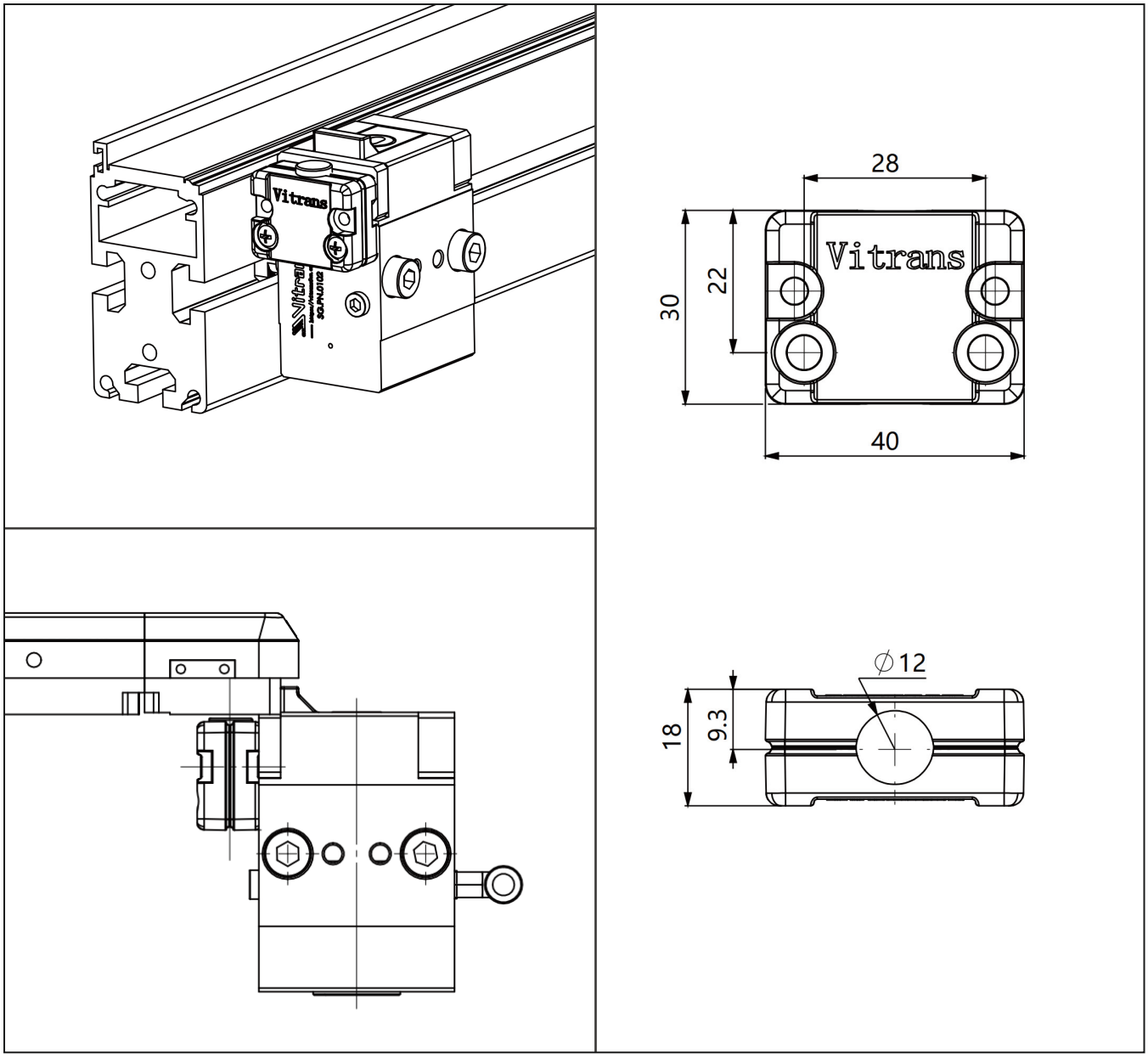

Product description	Proximity sensor bracket
Model	ZJ/UV

10

Support conveyors or other units

Support conveyors or other units.

SZL––4545 Leg
SZ––4560 Leg
SZH––4590 Leg

SM––Foundation bracket
Foundation bracket is used for securing leg or frame to the floor.

SZL 4545 Leg

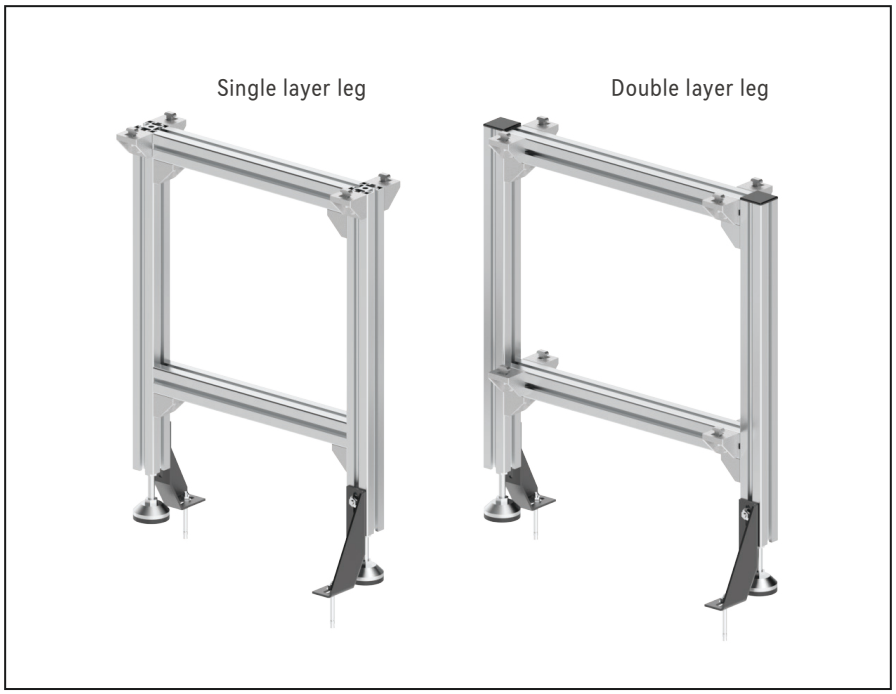

Delivery notes

Scope of delivery:

Leg

Foundation bracket (with floor dowel)

Condition on delivery:

Fully assembled

- Made of 45X45 aluminum profile (Europe standard)
- Permitted maximum distance between each leg is 2000mm.
- Connection profiles should be used to reinforce the frame when workpiece pallet width is over 640mm.
- Adjustable range of leg height: ±30mm

SZL 4545（Single layer leg）- Dimensions

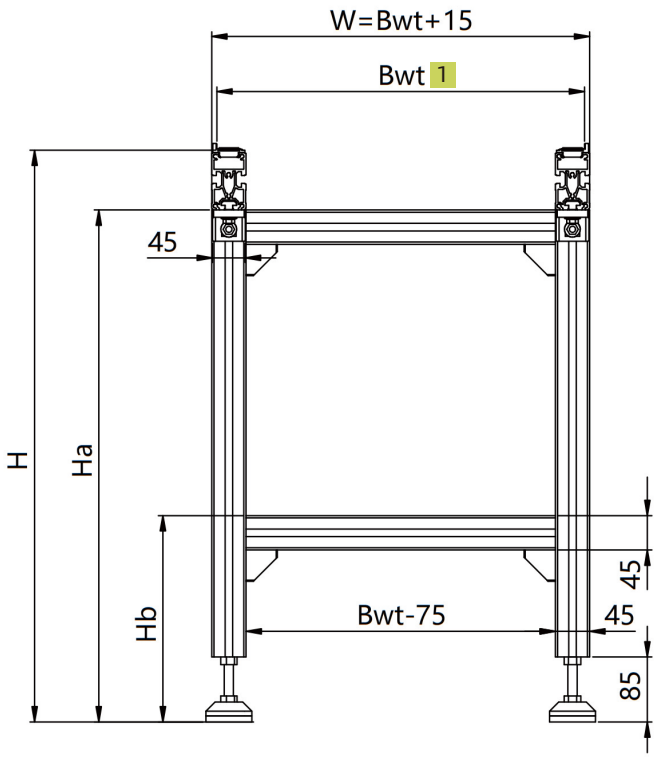



Application

1. For BC2 and FC2 conveyor, the dimension is Bwt+1. For AC2, PC2 or CV curve unit, the dimension is Bwt+2.

SZL 4545（Double layer leg）- Dimensions

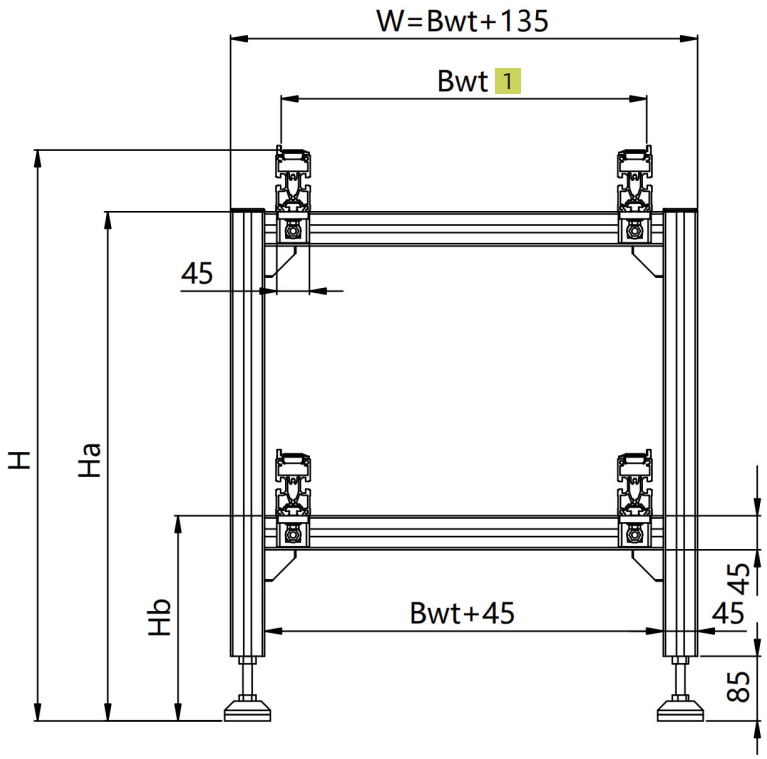

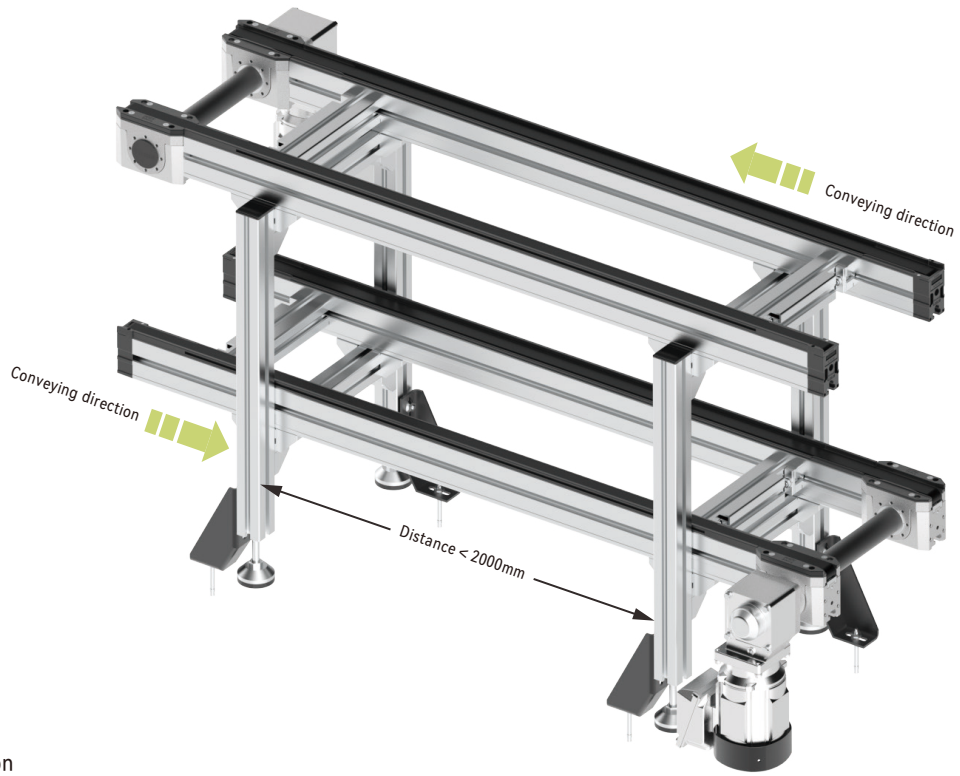

Application

1. For BC2 and FC2 conveyor, the dimension is Bwt+1. For AC2, PC2 or CV curve unit, the dimension is Bwt+2.

SZL 4545 Leg (KV curve unit)



- Made of 45X45 aluminum profile (Europe standard)
- Suitable for KV curve unit
- Adjustable range of leg height: ±30mm

Delivery notes

Scope of delivery:

Leg

Foundation bracket(with floor dowel)

Condition on delivery:

Fully assembled

SZL-KV/90- Dimensions

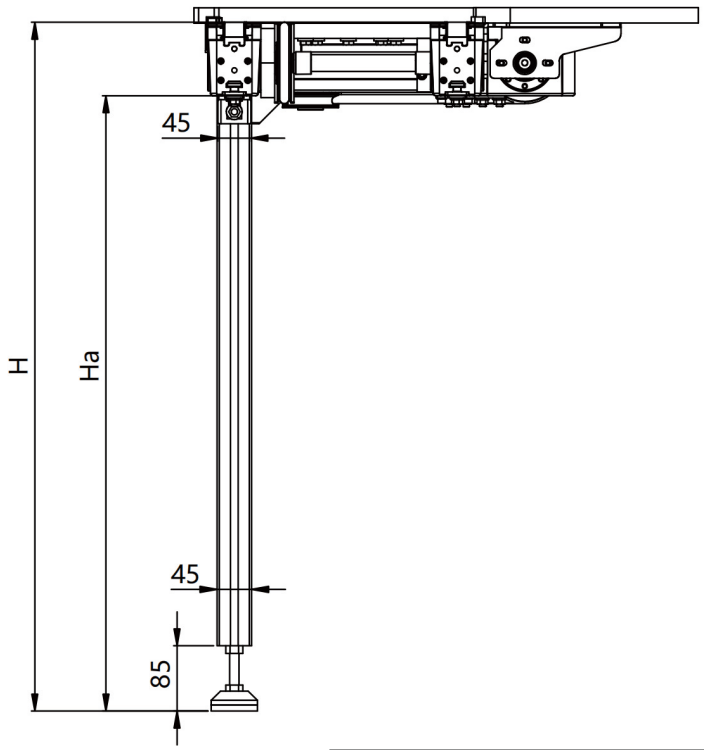

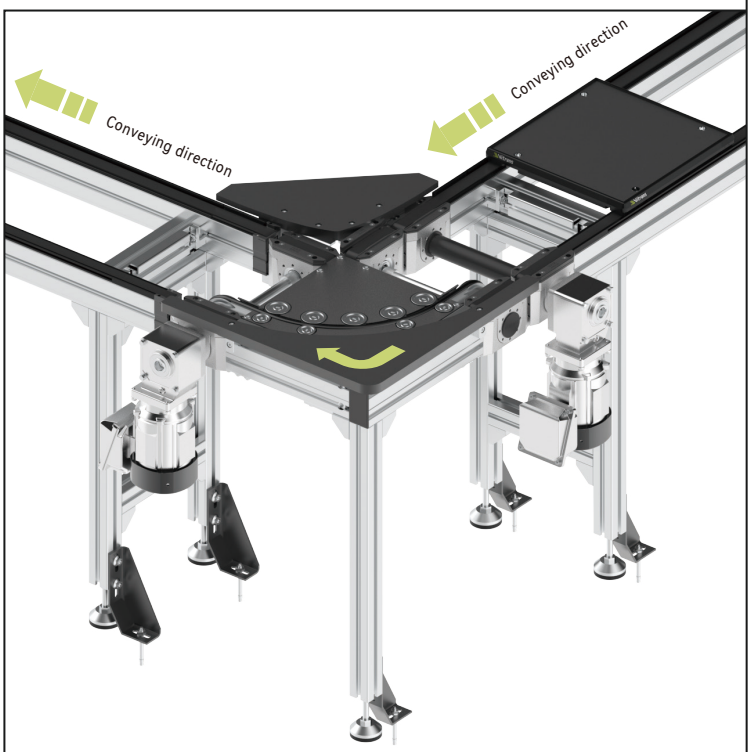

Application

Note: Support customizing leg for double layer KV curve.

SZL-KV/180- Dimensions

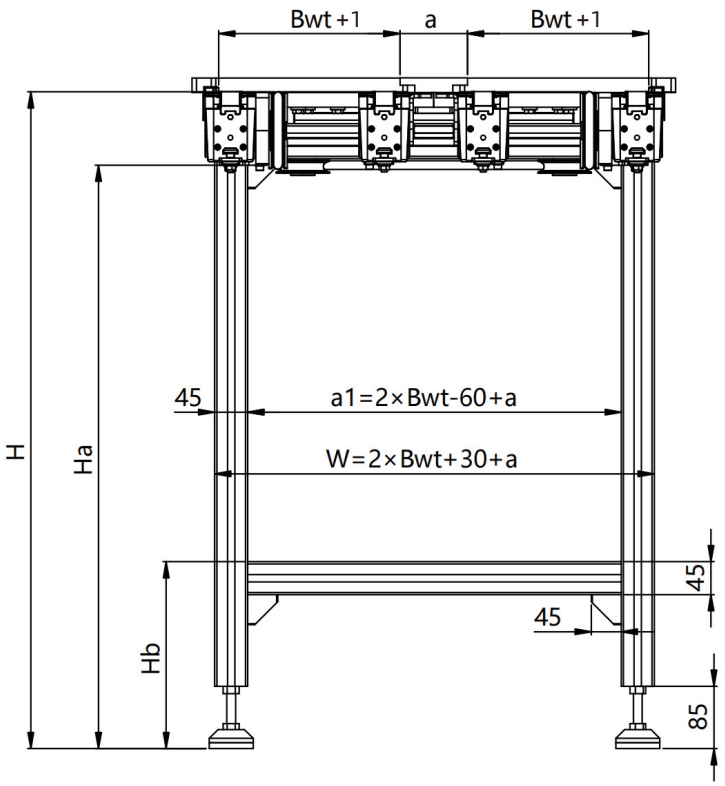

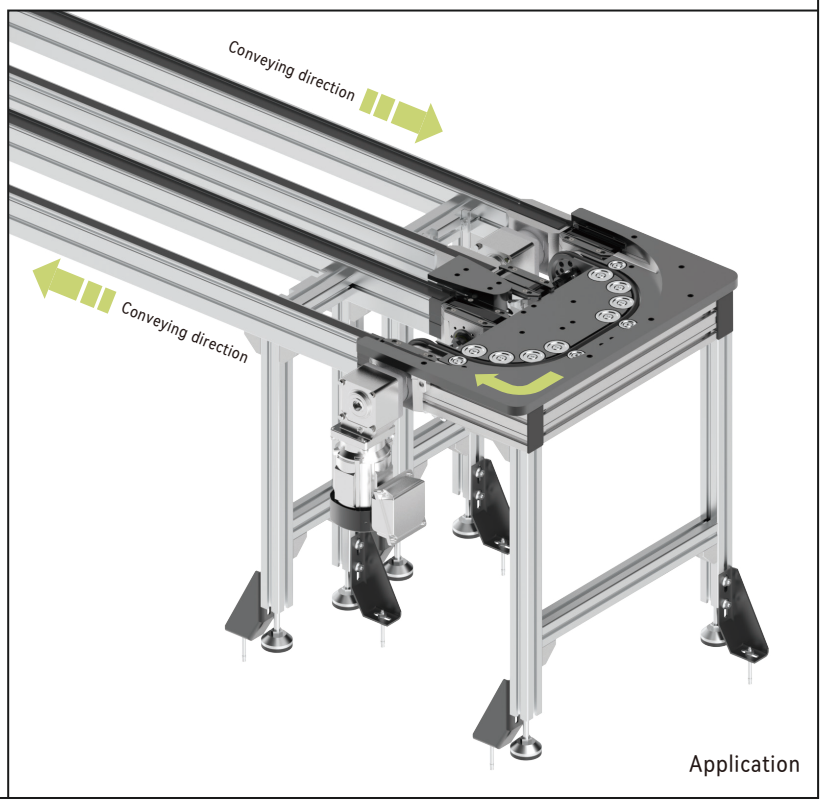

Application

Note 1: Dimension a can be 90mm or 135mm.

Note 2: Support customizing leg for double layer KV curve.

SZ 4560 Leg

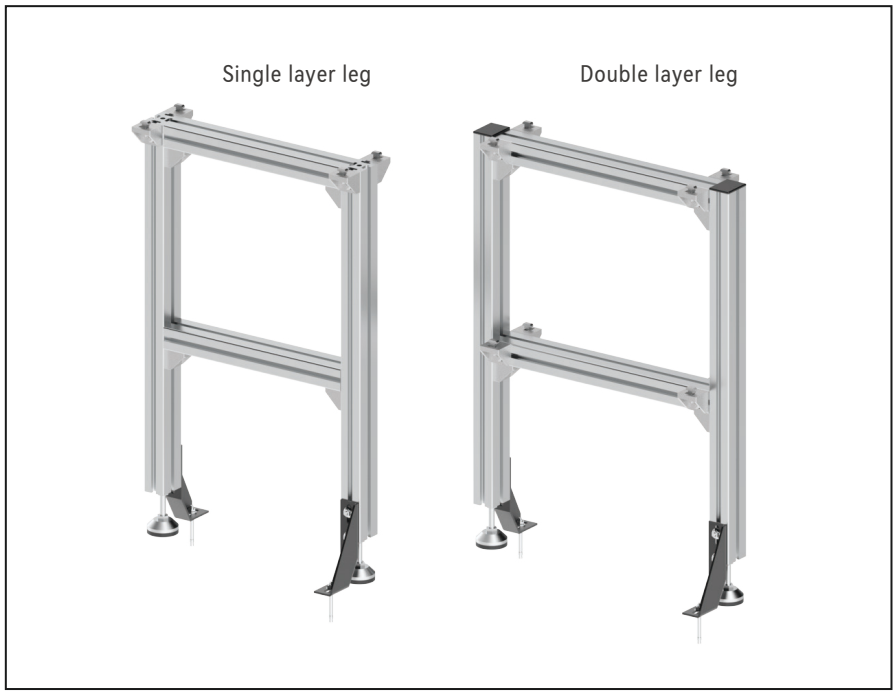

Delivery notes

Scope of delivery:

Leg

Foundation bracket (with floor dowel)

Condition on delivery:

Fully assembled

- Made of 45X60 aluminum profile (Europe standard)
- Permitted maximum distance between each leg is 2000mm.
- Connection profiles should be used to reinforce the frame when workpiece pallet width is over 640mm.
- Adjustable range of leg height: ±30mm

SZ 4560（Single layer leg）- Dimensions

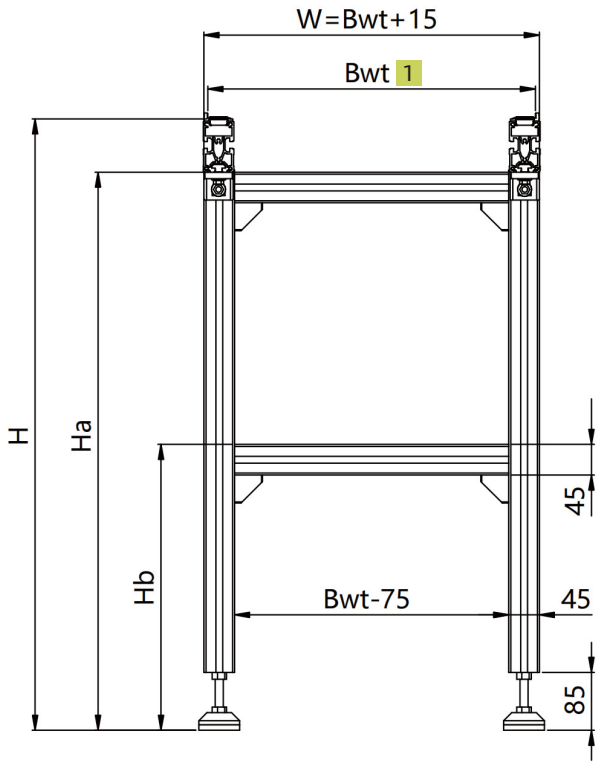



Application

1. For BC2 and FC2 conveyor, the dimension is Bwt+1. For AC2, PC2 or CV curve unit, the dimension is Bwt+2.

SZ 4560（Double layer leg）- Dimensions

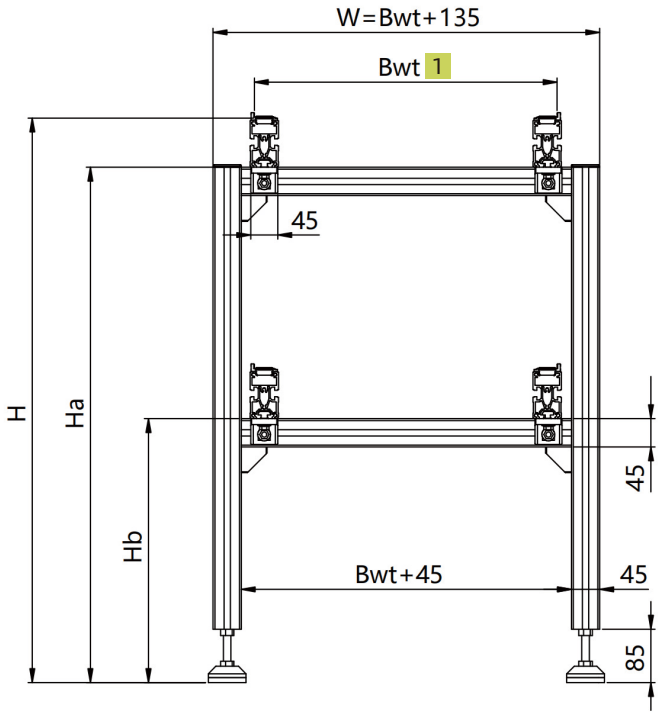

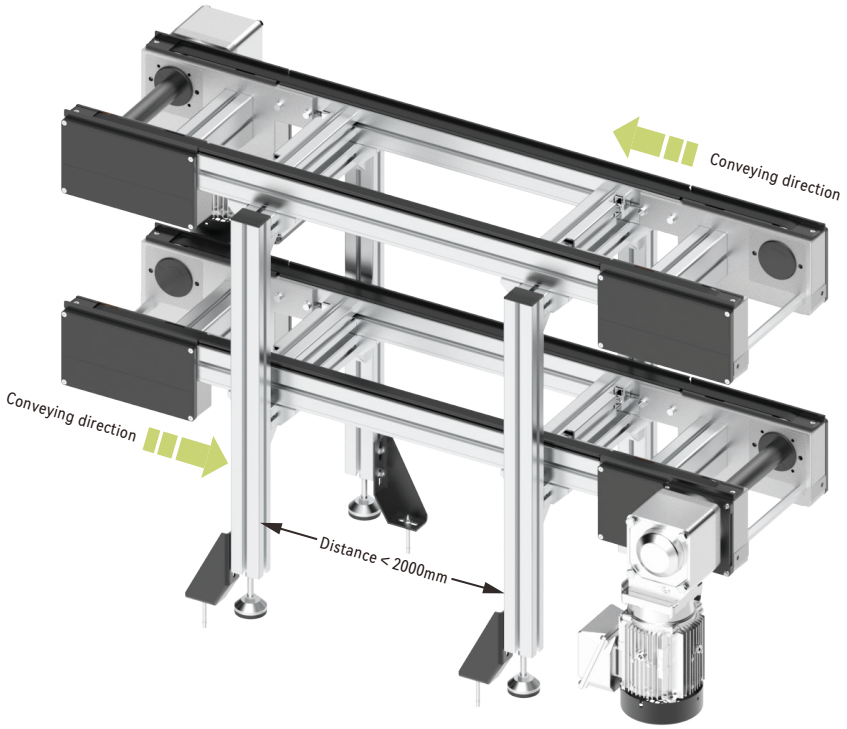

Application

1. For BC2 and FC2 conveyor, the dimension is Bwt+1. For AC2, PC2 or CV curve unit, the dimension is Bwt+2.

Note: Support customizing leg for double layer CV curve.

SZH 4590 Leg

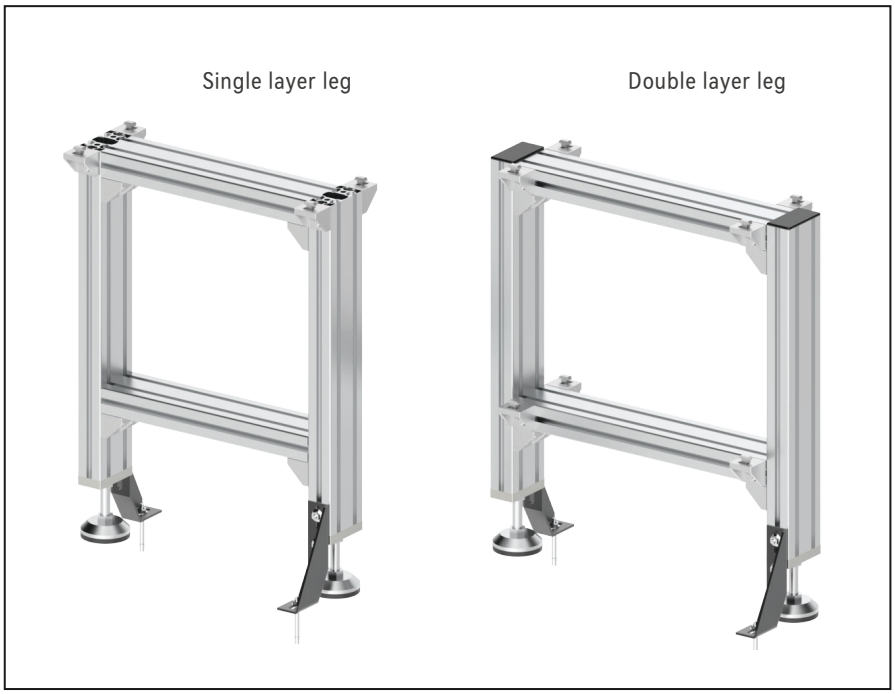

Delivery notes

Scope of delivery:

Leg

Foundation bracket (with floor dowel)

Condition on delivery:

Fully assembled

- Made of 45X60 aluminum profile (Europe standard)
- Permitted maximum distance between each leg is 2000mm.
- Connection profiles should be used to reinforce the frame when workpiece pallet width is over 640mm.
- Adjustable range of leg height: ±30mm

SZH 4590（Single layer leg）- Dimensions

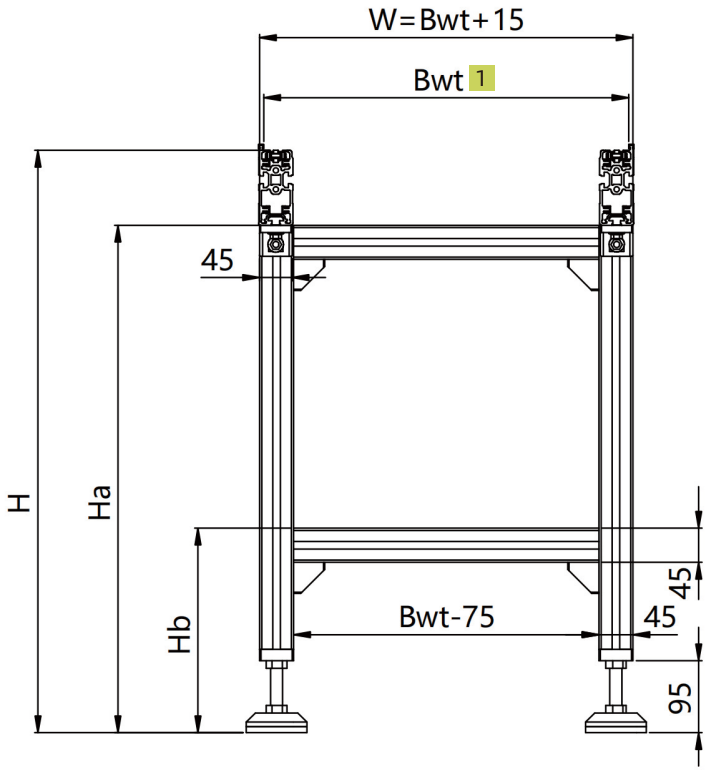

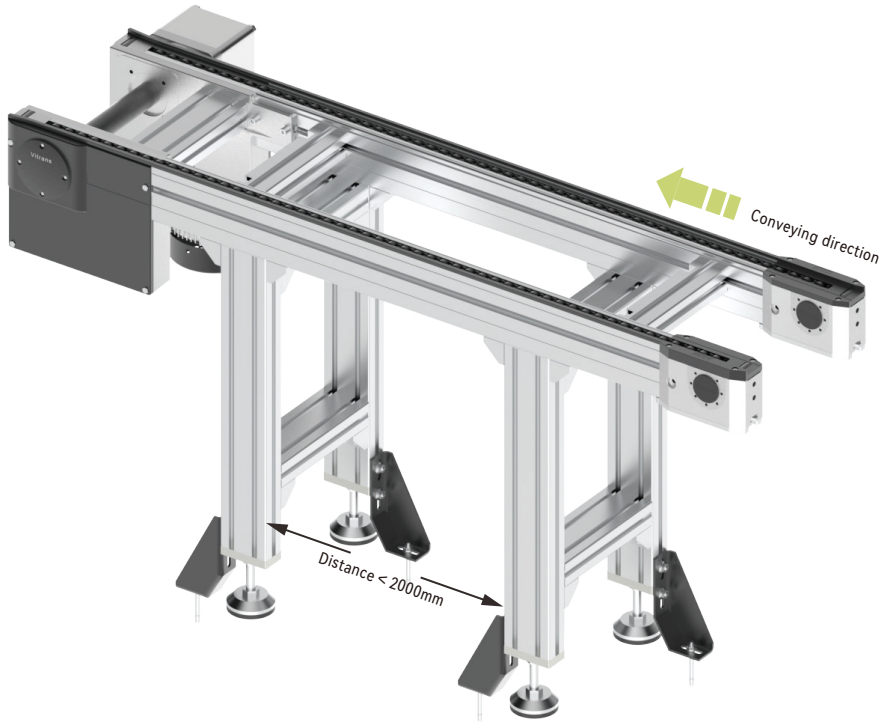

Application

1. For BC2 and FC2 conveyor, the dimension is Bwt+1. For AC2, PC2 or CV curve unit, the dimension is Bwt+2.

SZH 4590（Double layer leg）- Dimensions

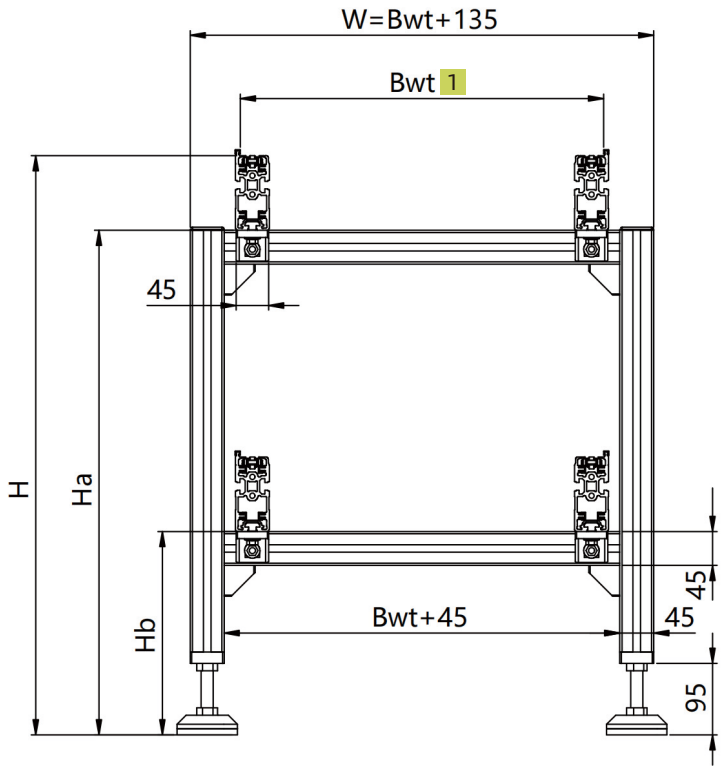

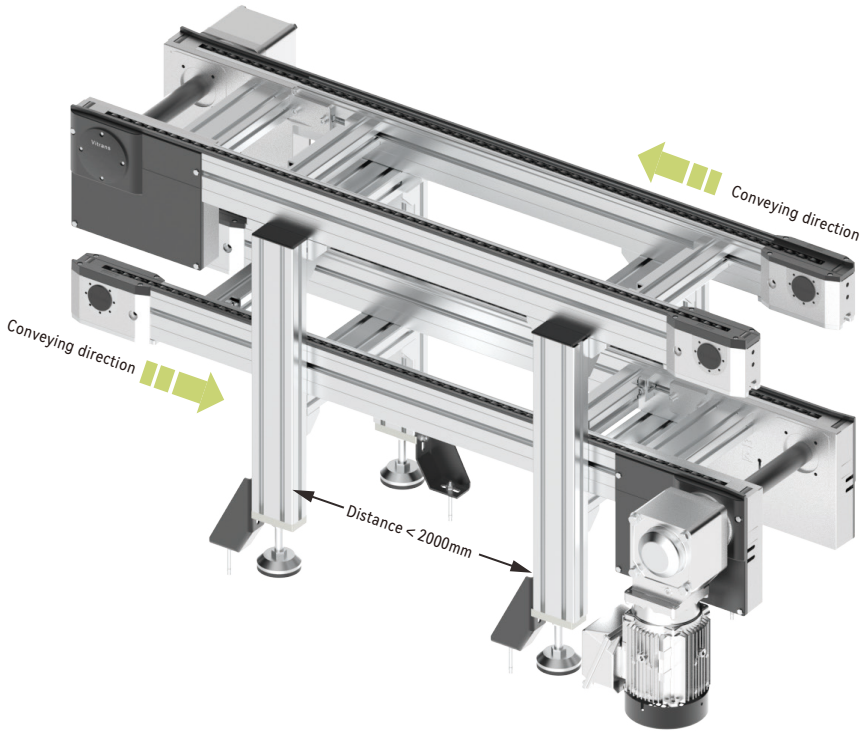

Application

1. For BC2 and FC2 conveyor, the dimension is Bwt+1. For AC2, PC2 or CV curve unit, the dimension is Bwt+2.

Technical data

Workpiece pallet width(mm)*	Bwt	160,240,320,400,480,560,640,800,1040,1200
Leg width(mm)*	W	
Conveying height(mm)*	H	350~2000
Height of Top layer profile top face(mm)*	Ha	
Height of bottom layer profile top face(mm)*	Hb	>350

Note 1: H=Ha + Height of conveyor section profile

Note 2: Connection profiles should be used to reinforce the frame when workpiece pallet width is over 640mm (Refer to the figure below)

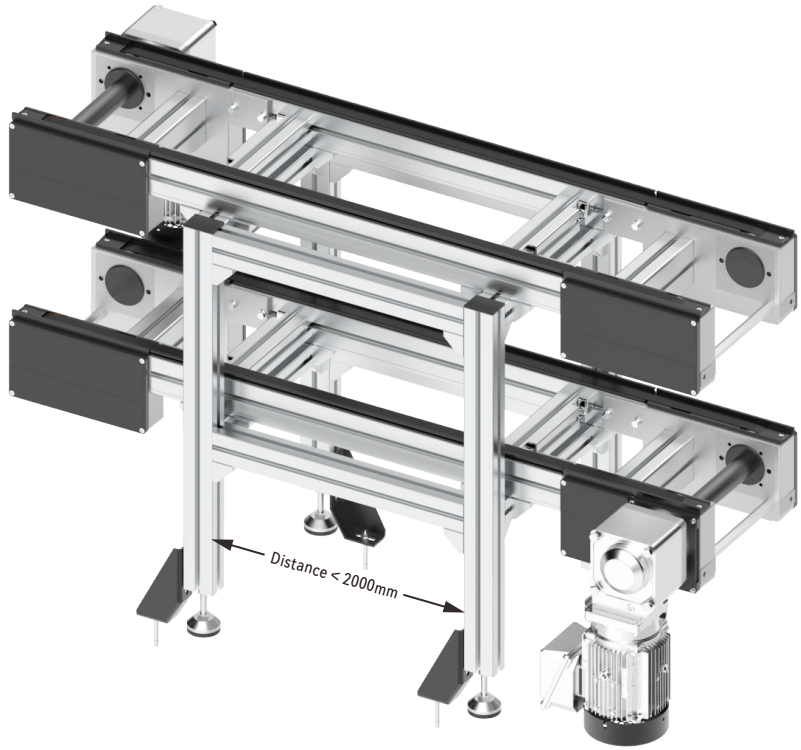

Application

Conveying height and conveyor type

Conveyor type	Conveying height
BC2 Timing belt conveyor	H=Ha+80
BC2/M Timing belt conveyor	H=Ha+80
FC2 Flat belt conveyor	H=Ha+80
AC2 Accumulated chain conveyor	H=Ha+100
AC2U Accumulated chain conveyor	H=Ha+100
AC2L Accumulated chain conveyor	H=Ha+100
AC2/H Accumulated chain conveyor	H=Ha+100
PC2 Plastic chain conveyor	H=Ha+120
KV Curve unit	H=Ha+90
CV Curve unit	H=Ha+100

Note 1: The section profile heights are different for different conveyor types.

Note 2: The conveying height can be adjusted by leg.

Note 3: Support customization.

Ordering information

SZ ▢	**Leg type：SZL、SZ、SZH**
▢	**Layer quantity of conveyor：** S (Single layer),D (Double layer),E (Others)
W	**Leg width**
Ha	**Height of Top layer profile top face(mm)**
Hb	**Height of bottom layer profile top face(mm)**

Ordering example

SZL—D—W255—Ha720—Hb350

Leg type： SZL **Layer quantity of conveyor：** D (Double layer) **Leg width：** 255 **Height of Top layer profile top face：** 720

Height of bottom layer profile top face： 350

SM Foundation bracket



Delivery notes

Scope of delivery:
Foundation bracket
Assembly kit
Floor dowel(M8×80)

Condition on delivery:
Full set

- Foundation bracket is used for securing leg or frame to the floor

SM - Dimensions

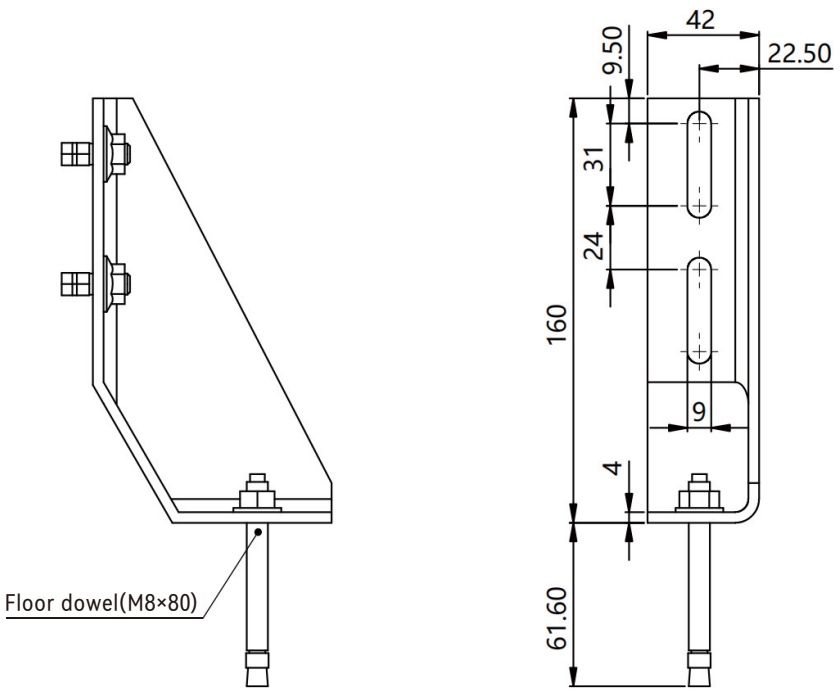

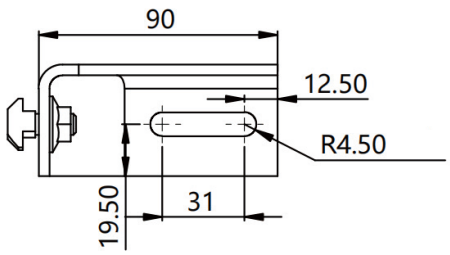

Product description	SMFoundation bracket
Model	SM.01.01

11 Pallet conveyor system overview

Pallet conveyor system overview

Application

Vitrans VT conveyor system is designed for the transportation of workpiece pallets weighing up to 240 kg. It is a economical and diverse modular system that meets the requirements of a wide range of different products.

Accumulation

Accumulation means when some of the workpiece pallets are stopped, the conveyor keeps running to convey the other workpiece pallets. An accumulated conveyor system request the workpiece pallets and conveyors have excellent wear resistance.

Safety

1. Do not modify the product without authorization.
2. Prohibit using the product to mechanical loads beyond its allowable range.
3. The manufacturer shall not be liable for warranty and compensation for damages caused by improper operation, unauthorized modification.
4. Avoid system failure caused by improper operation or improper maintenance.
5. Pallet conveyor system is designed and produced for a long service life, timely and correct maintenance is important to ensuring the durability.

Overload

Overloading of the conveyor may cause motor failure, conveyor medium and motion parts worn out. Overloading of pneumatic parts may cause the mechanism to malfunction or fail.

Load and speed

Permitted load of stoppers decrease with increasing speed.

Conveying medium

Conveying medium can tolerate various common media in production, such as water, mineral oil, lubricating grease, and cleaning agents.

Wear and speed

The wear of the conveying medium is directly proportional to the conveying speed. This means that compared to the standard speed of 12m/min, a conveying speed of 18m/min causes the system to wear out faster.

Wear

Wear is inevitable during system operation. Proper maintaining can help ensure the normal functioning and safety of the system during its service life. However, wear is also affected by the frequency of system use and production environment.
The following measures can reduce wear:
• Turn off the conveyor or mechanism when there is no workpiece pallet on it.
• Decrease conveying speed.
• Reduce load or accumulation.
• Regularly clean the conveying medium.

Effects of high/low loads on wear

High load causes faster wear.

Requirements of compressed air

Compressed air used for the system must be filtered and dried.
Working pressure: 4-6 Bar

Vitrans Automation

Vitrans Automation Equipment Co.,Ltd

Webiste:
www.vitrans-conveyor.com

E-mail:
sales@vitrans.cn