Leetx

MOOVALL, LDA
Rua Professor David Martins, 64
4485-805 | Vilar
Vila do Conde – Porto | PORTUGAL
info@moovall.com
+351 223 188 620
Custo de chamada para rede nacional
moovall.com

Leetx_Servo Press System_202412_V1.2

Leetx Industrial Technology Shanghai Co.,Ltd
Building 4, No. 188, Zhongchen Road,
Songjiang District, Shanghai.
+86 (21) 5810 7882
Info@leetx.com
www.leetx.com

Leetx Linkedin
Leetx YouTube

SERVO PRESS SYSTEM

Leetx

Servo Press System



moovall.com





SLP



RLP



CONTENTS

04 **About Us**

04 Introduction
06 Core Technology
07 Service Network

08 **Servo Press System**

14 Acquisition and Evaluation System
22 EPS & PCS Servo Press
34 PLP Precise Servo Press
37 RLP Rotational Servo Press
40 SLP Speedy Servo Press



Independent full stack development



Diverse product lineup



Excellent performance

ABOUT US

Leetx®

Premium smart assembly product manufacturer

Leetx® is a company specializing in the development, production, and sales of intelligent assembly products within the high-end manufacturing and assembly sector.

Our product lineup mainly includes transducerized tightening system, automatic screw feeding system, and servo press system, which are applied across various industries including EV battery, E-motor, new energy vehicles, auto parts, consumer electronics, rolling stock, aerospace, off-road machinery, medical, etc.
With a broad service network and numerous service centers worldwide, we offer you a complete smart assembly solution, helping you establish your own smart factory.

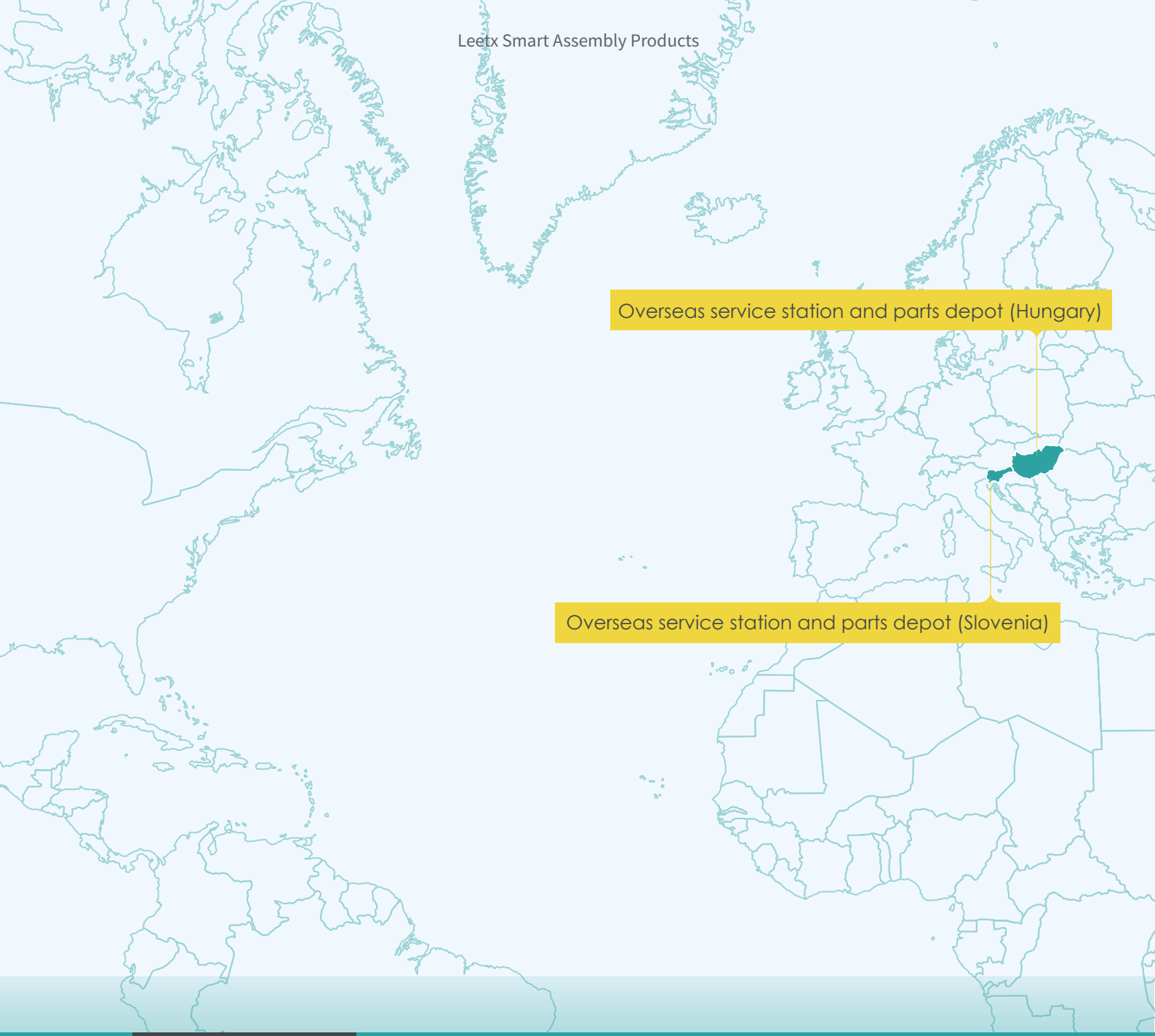

Core Technology

Independent full stack development

Forward development and technological platformization. Breakthroughs in application development technology are achieved by mastering the underlying logic and establishing a novel technology platform that caters to both embedded systems and upper computers.

Product synergy

With full product matrix, we offer solutions for transducerized tightening system, automatic screw feeding system, and servo press system, to maximize the synergistic effect of each product line, adapting to a variety of application scenarios and meeting the development demands of the high-end smart assembly requirement.

Team Innovation Driven

We are committed to advancing the smart assembly sector, consistently enhancing the assembly level of manufacturing industry. Refusing to settle for mediocrity, we embrace the entrepreneurial spirit, and based on the development of the assembly industry, we deliver exceptional results for our customers.

Service Network

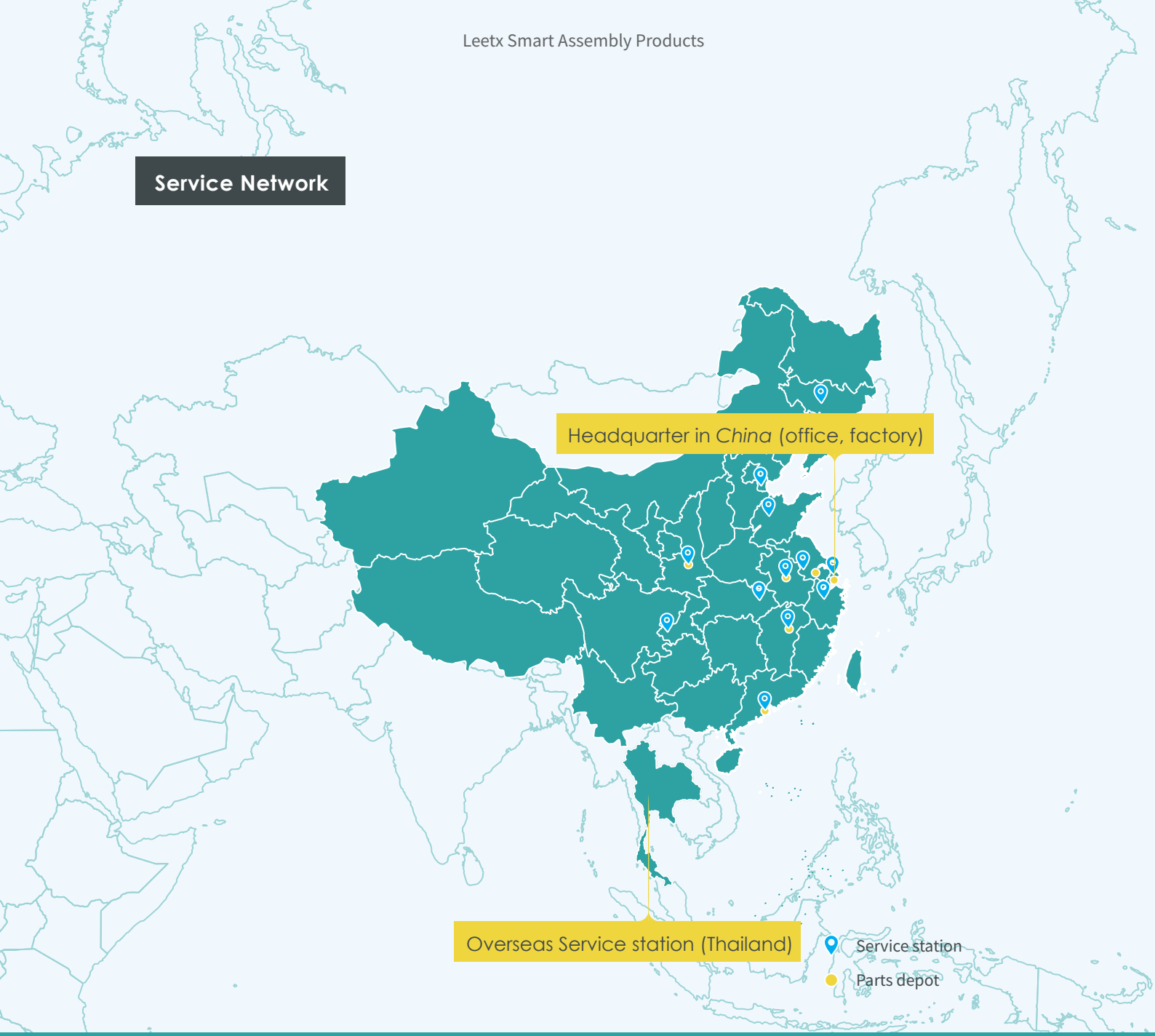

60+
service engineers

12
regional service centers
Shanghai/Shenzhen/Changchun/Wu-han/Chongqing/Xi' an/Jinan/Hefei/Fu zhou/Ningbo/Nanjing/Tianjin

7
parts depots
- China
Shanghai/Wuxi/Xi' an/Shenzhen /Hefei/Fuzhou
- Hungary

Response time

Field support within **24** hours
Phone support within 2 hours

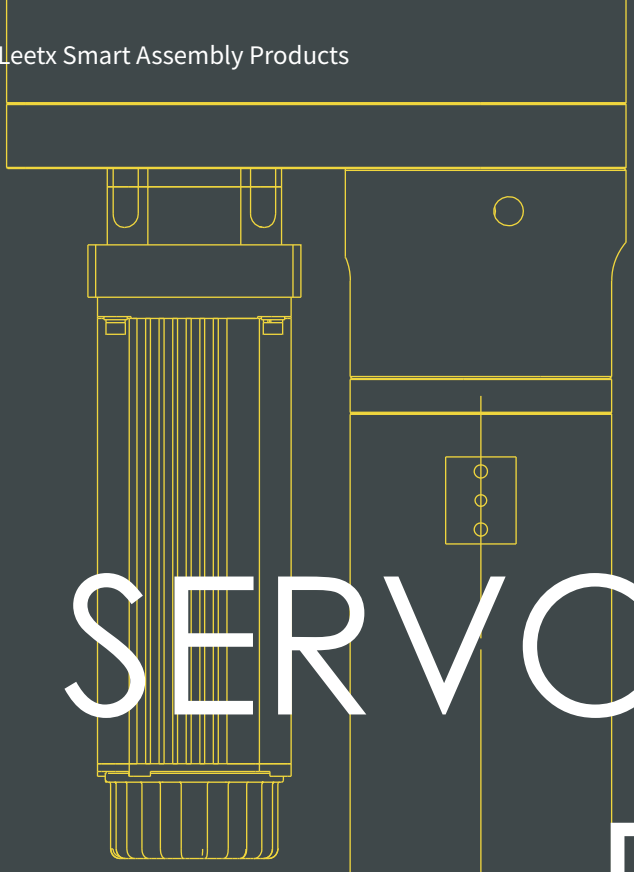

SERVO PRES SYSTEM

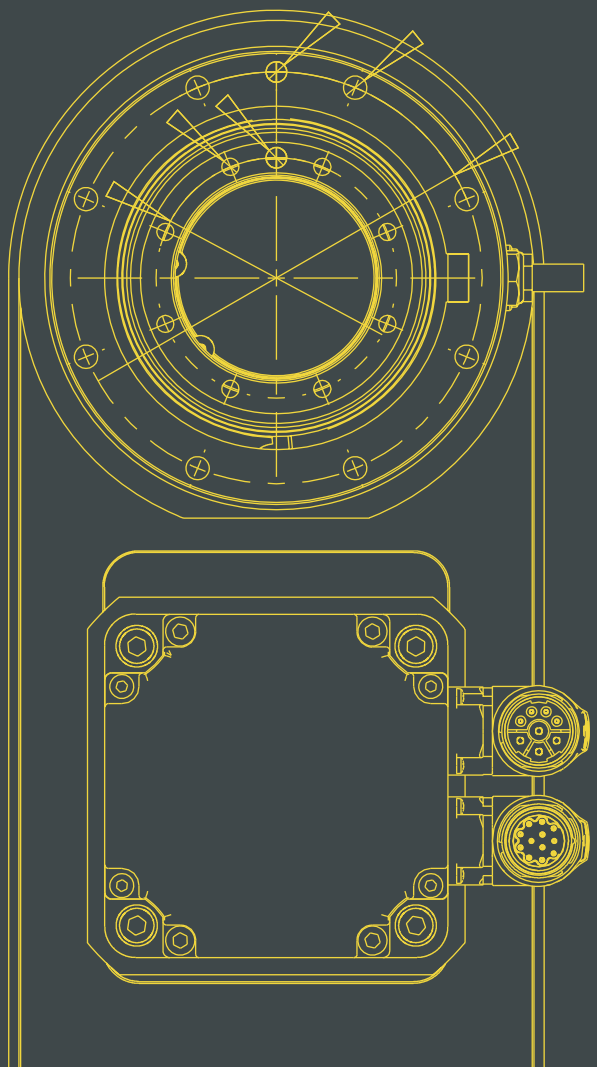

SS

Vision

- Extensive use in the areas of connection, testing, assembly, molding, etc.
- Boosting precision manufacturing, monitoring process data, and reducing reject ratio
- Clean and environment-friendly, highly digitized and flexible, achieving sustainable development
- Pioneer in high-end manufacturing sector

Servo Press System

Integrated monitoring system for improving quality and efficiency
Integrated process monitoring has become an important factor in industrial automation.
The Leetx servo press system boasts exceptional precision, rapid operation, a compact design, outstanding reliability, a maintenance-free feature, and a diverse range of models.
It plays an important role in reducing energy costs, enhancing equipment utilization, and boosting production efficiency.

Application



Product matrix



PLP EPSS EPSL PCSS PCSL SLP RLP

Model	Max. speed (mm/s)	Range (kN)	Stroke (mm)	Torque (N·m)	Max. speed (rpm)
PLP Precise Servo Press	200	200N/500N	100/200	NA	NA
EPS servo press	250	2kN/5kN/15kN/30kN/60kN/ 100kN/150kN/300kN/500kN	200/400/600	NA	NA
PCS servo press	250	5kN/15kN/30kN/60kN/100kN /150kN/300kN/500kN	200/400/600	NA	NA
SLP Speedy Servo Press	500	30kN	400	NA	NA
RLP Rotational Servo Press	150/200	1kN/5kN/12kN/20kN/30kN/ 40kN/60kN	100/200/400	20/50 /100/200	250

System framework diagram

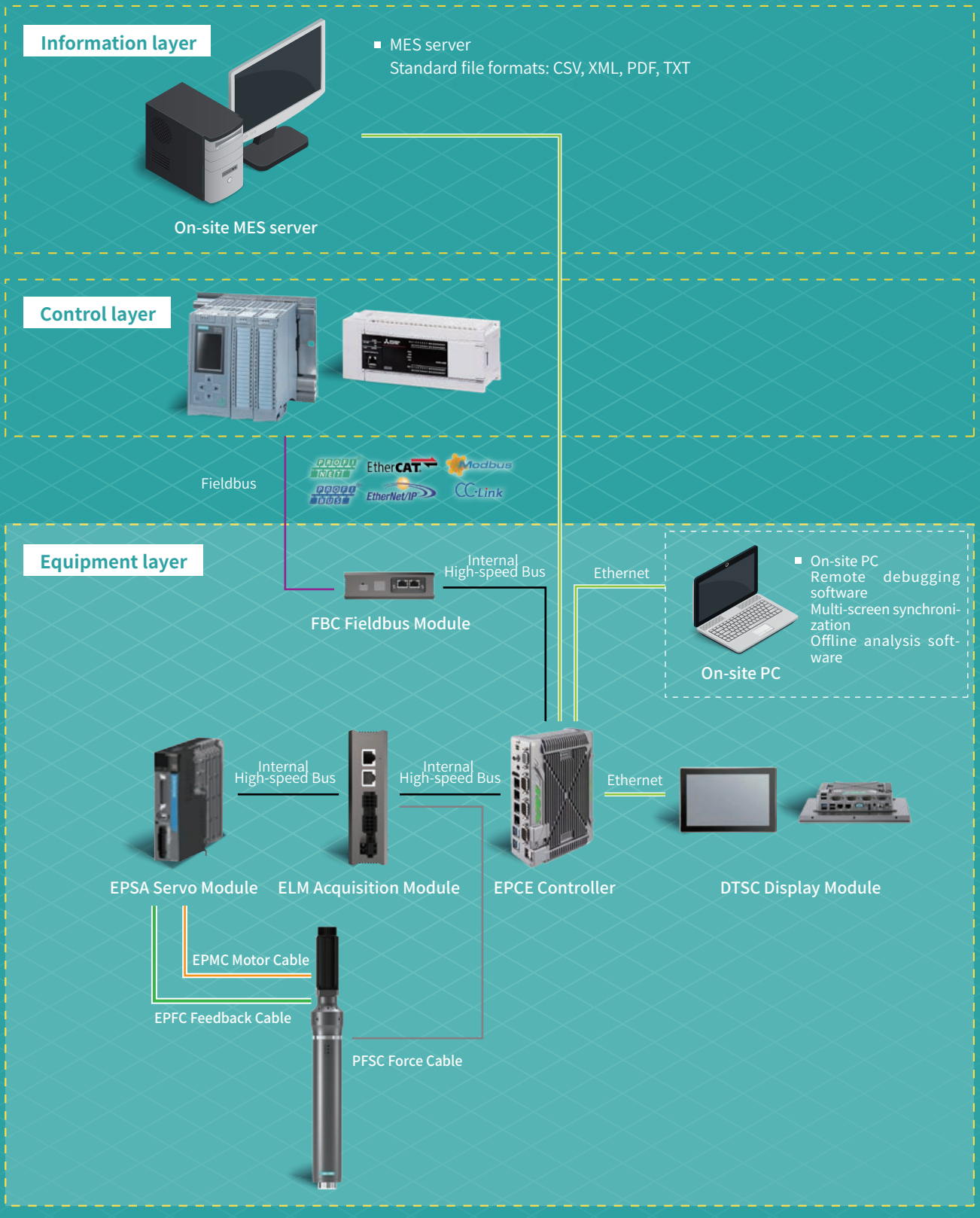

Advantages of the press system

Precise control algorithm

The automatic decelerating force control algorithm is designed to adapt to product characteristics, ensuring that the overshoot force is controlled to 1% or less;

Pressure stability, dynamic position adjustment, and a stable force algorithm ensure pressure fluctuations are kept within 0.5%;

Both inflection point triggering algorithm and slope triggering algorithm are applied; The transducer can detect wire break, monitoring and protecting the press.

High precision

Repeated displacement accuracy of 0.01 mm;

The repeated displacement accuracy of the external displacement transducer can reach 0.002 mm;

The pressure transducer has an accuracy of 0.5%, and the accuracy of the system force is 1%;

The collection system boasts a 24-bit resolution and operates at a sampling frequency of 10 kHz.

Real-time capability

Control cycle of 250 μs, with a high response;

Real-time measurement of force and real-time evaluation of curve process;

Each curve features up to 500,000 sampling points.

Clear software system

Two-level menu, concise and clear;

Simple parameter setting;

The system can automatically identify drive failures and display the fault content.

High stability

The service life is up to 15 million cycles, making it suitable for environments requiring high-frequency and high-intensity usage;

Core parts are maintenance-free;

Compact structure, easy to integrate.

Data traceability

SN barcode binding, real-time feedback of process data and results;

Real-time data uploading for easy traceability management;

Offline software supports tools such as inflection point alignment, X-R charts, histograms, spec, etc., assisting in product analysis and process optimization.

Diverse product lineup

A wide variety of presses are available, catering to different application scenarios;

The complete range is capable of both pulling and pressing, comes standard with a brake and features high standard configuration.

Acquisition and Evaluation System

Special features of software interface

Permission management

RFID card login

Black box

Recording significant NOK parameters

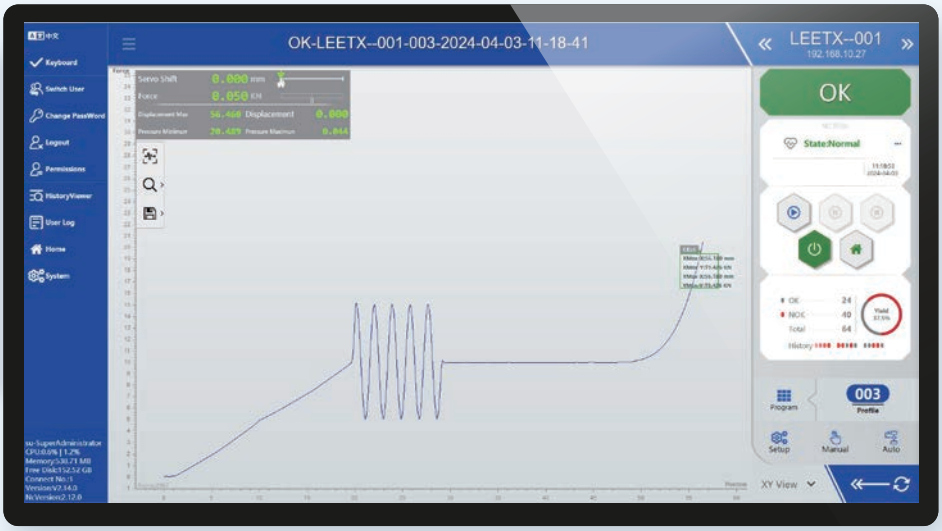



The system automatically detects drive failures and displays failure content

Process management

- User-friendly and intuitive process management interface
- Online curve comparison for detail sorting
- Evaluation window/curve calibration, quick and convenient

Equipment setting

- Custom conversion of special barcodes
- Selective backup of process parameters

Bus debugging

- Real-time monitoring of control words and status words
- Real-time monitoring of process steps

User-friendly software interface



- One press can be connected to multiple clients
- Split screen display
- Display of pressure-displacement, pressure-time-displacement, EO results, and measurement of data
- Press condition prompt

Complete curve details

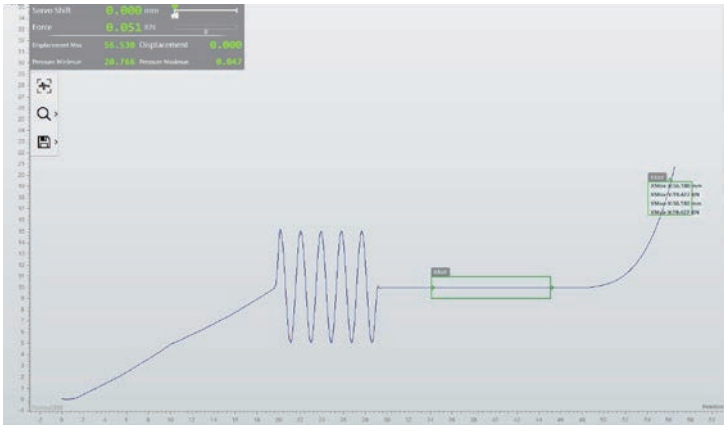

- Present the assembly details in up to 500,000 data collection points, instead of using fitting curve
- 10 KHz sampling rate, 24-bit resolution
- Continuous collection of real-time data for 30 minutes under pressure holding state
- Real-time generation of assembly curves, real-time evaluation, and real-time feedback

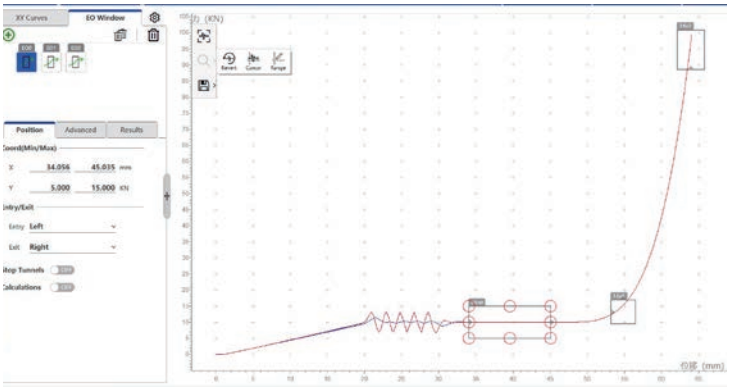

- Online curve comparison to analyze product consistency
- Inflection point triggering and detection
- Real-time calculation of assembly time, speed, and mean
- 256G solid state drive supporting offline storage of 10 million data records

Online assessment function display

During the assembly, various anomalies may occur, such as mechanical deviation, poor product consistency, picking errors, and operational mistakes, and in severe cases, they may result in product damage, deformation of the press head, and even line stoppage and repair.

The online evaluation feature enables comprehensive process monitoring, immediate detection of assembly anomalies, curve linking with online actions, and effectively prevents product and fixture damage.

EO parameter setting

A single process can support the configuration of up to 10 EOs concurrently, offering a diverse range of EO types.

Real-time performance of curves

The curve is generated in real time according to the assembly process, and it is compared with the EO window parameters in real time to identify anomalies.

Comprehensive process monitoring

The entire motion process can be controlled by setting the triggering area.

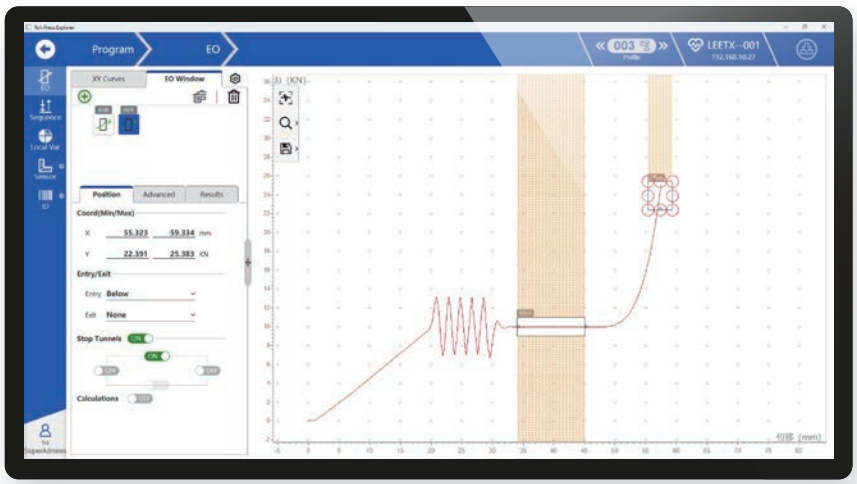

Stop area

Customizable activation and stop areas and ranges for EO

Action interlocking

All windows support online evaluation and can be linked to alarms, braking, returning to home position and other interlocking actions.

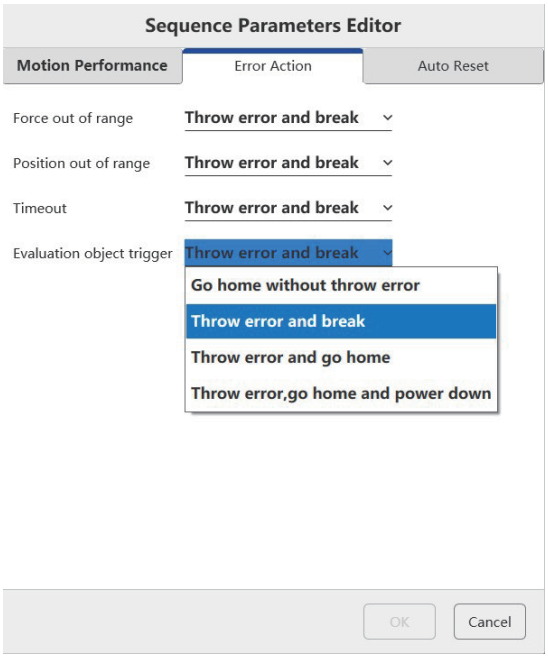

Force closed-loop function display

In the production process, the actual pressure exerted on the product is much higher than the set target pressure, which is known as the phenomenon of ‘overpressure’ . This overpressure greatly affects the quality of the delivered product.

The Leetx servo control system maintains pressure overshoot within 1% of the target value, minimally impacting cycle time and thus ensuring a high-quality, high-speed production environment.

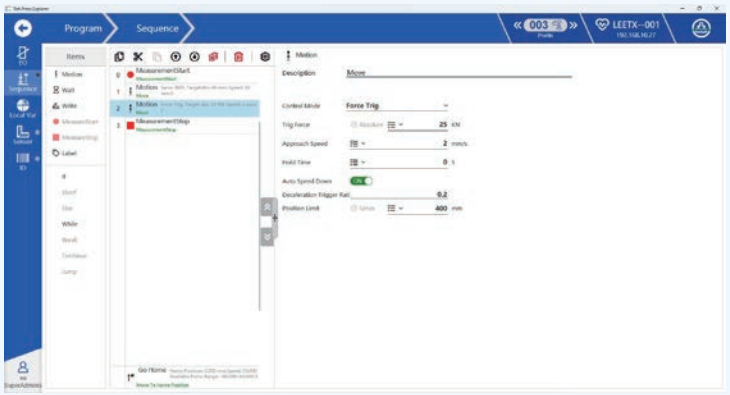

- In-house adaptive speed reduction algorithm
- 250 μs high dynamic response speed, and capability of replanning of up to 4000 motion times per second
- Process personnel are allowed to customize the threshold according to the product rigidity.

In actual assembly, during pressure holding, due to their low rigidity, most products tend to experience pressure decay, resulting in improper press-fitting.

The Leetx servo control system uses closed-loop control algorithm to continuously output a constant press-fitting force, ensuring that the customer’ s product is press-fitted in place.

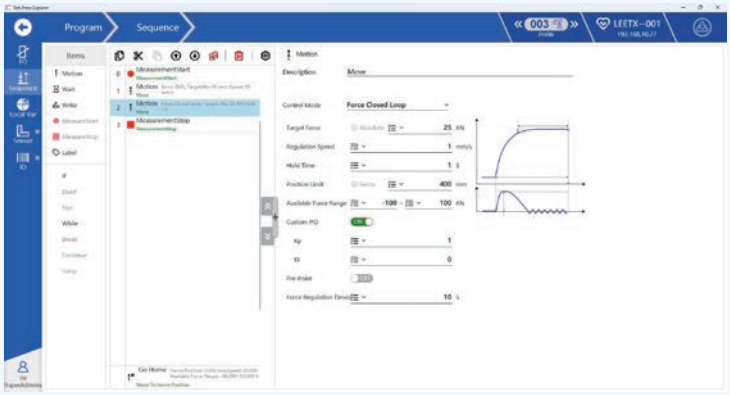

- Automatic configuration of parameters to quickly complete pressure closed-loop settings
- Automatic adjustment of parameter settings, and user-defined adjustment of closed-loop effect
- Adaptive adjustment of servo μ-level position to maintain constant pressure output

Advantages of hardware

Integrated electrical board

The control system allows high integration of accessories;
Standard integrated electrical installation board, without need for secondary wiring;
Electrical components and cables are integrated and ready to use;
Improved efficiency of on-site installation and debugging

High-precision collection module

24-bit high resolution;
Data collection frequency of 10 KHz;
Collection of the raw MV/V signal of the force transducer without the need for conversion through an amplifier;
Configuration of dual channels and external displacement transducers for functional expansion.

Dependable double STO

Double STO for two independent control loops;
Compliant with SIL3 and EN ISO 13849-1 Ple safety standards.

Highly compatible filter

Equipped with excellent electromagnetic compatibility solutions;

Standard linear filters and absorbing resistors;

Protecting the factory power supply against harmonic feedback to the grid.

System advantages



Core technology

The core motion algorithms include S-curve, dynamic replanning, pressure overshoot algorithm, and closed-loop control algorithm.



High-speed dynamic response

The system control accuracy can reach 250 microseconds, ensuring real-time data exchange between the control system and the servo drive for precise motion control.



High scalability

Customized motion strategy algorithm and advanced features

*Supporting bulk parts delivery, facilitating unified integration

Network topology diagram - universal press



PLC

CC-Link EtherCAT PROFINET EtherNet/IP

Fieldbus



FBC Fieldbus Module

Internal High-speed Protocol



PC
(compatible with Windows visualization software)
Ethernet interface
Export in formats of XML, PDF



Ethernet



PCCE Controller

DTSC Display Module

Internal High-speed Protocol



PFSC Force Cable

ELM Acquisition Module

Internal High-speed Protocol



PCMC Motor Cable
PCFC Feedback Cable



PCSA Servo Module

PCS Servo Press

Fieldbus Internal High-speed Protocol Ethernet

Network topology diagram - rotational press

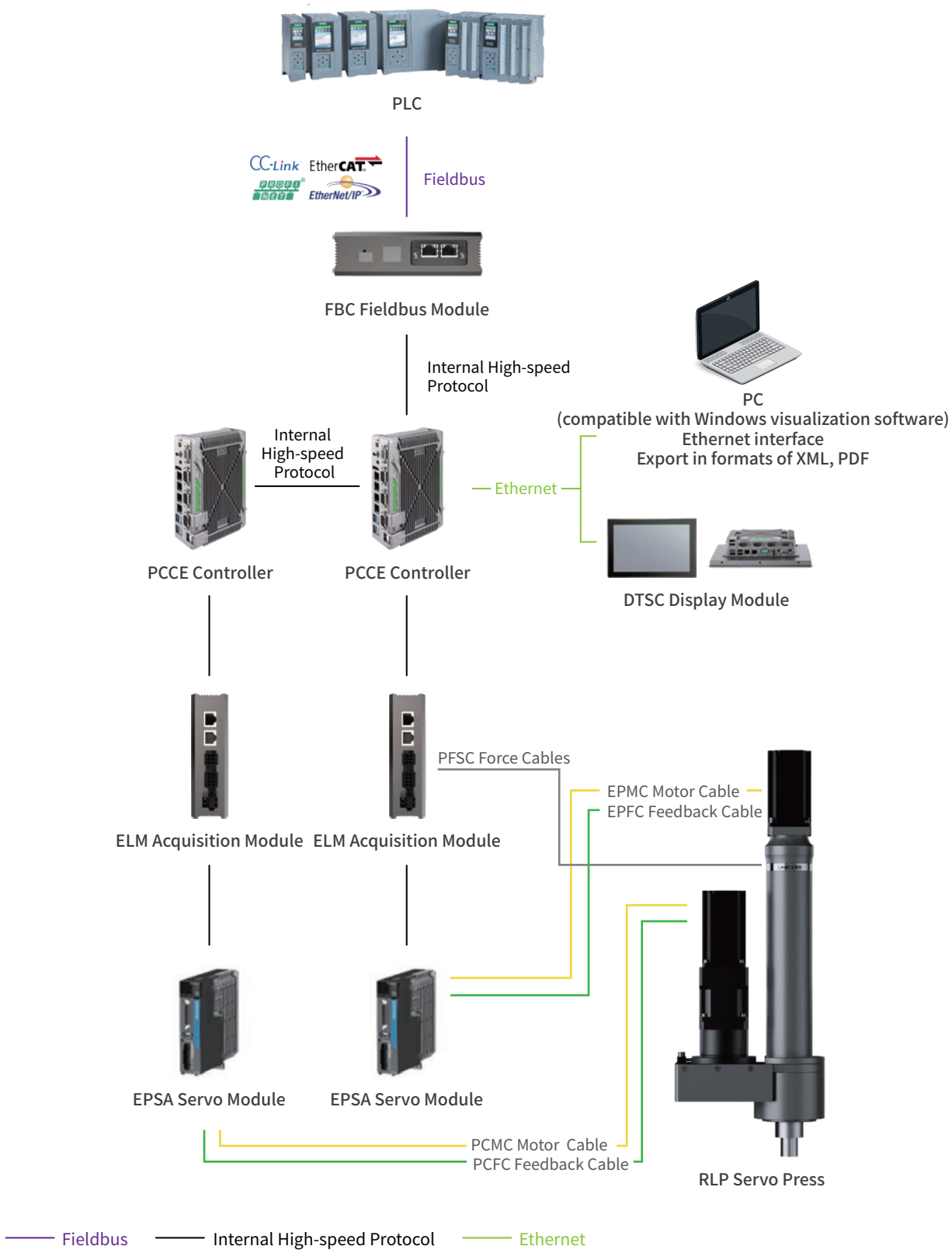

Technical parameters of controller

Technical parameters	EPCE
Measurement channel	Position, pressure, angle, torque
Max. XY sampling rate	10KHZ
Channel resolution	24Bit
Max. Curve collection point	500,000
Curve storage	100,000
max. programs	255
Accuracy level	Pressure accuracy of 0.5%FS, torque accuracy of 1%FS
Supply voltage	6-28Vdc
Type of evaluation window	Line-X, line-Y, rectangle, horizontal trapezoid, vertical trapezoid, envelope, hysteresis-X, hysteresis-Y, numeric input, △Y, gradient-X, gradient-Y, speed, mean, time, interruption
Output format of evaluation results	OK, NG, process value, curve, trend display, tricolor lamp
Supported fieldbus	Profinet, Profibus DP, CC link, EtherCat, Ethernet IP, Moubus TCP, DeviceNet, CC link IE, CANopen, BACnet, Common EtherCAT, UDP, IO etc.
Data storage	USB, standard 128GB solid-state drive (expandable)
Data export format	CSV, TXT, XML, PDF, Q-das
Visualization	10.1'' color capacitive screen, with graphical configuration software
Communication cycle	250μs
Installation	Desktop installation, wall installation
Compliant with IEC/EN 60529 IP rating	IP40, IP65 (front panel installation)

*Relevant functions can be customized according to customer needs

EPS & PCS Servo Press

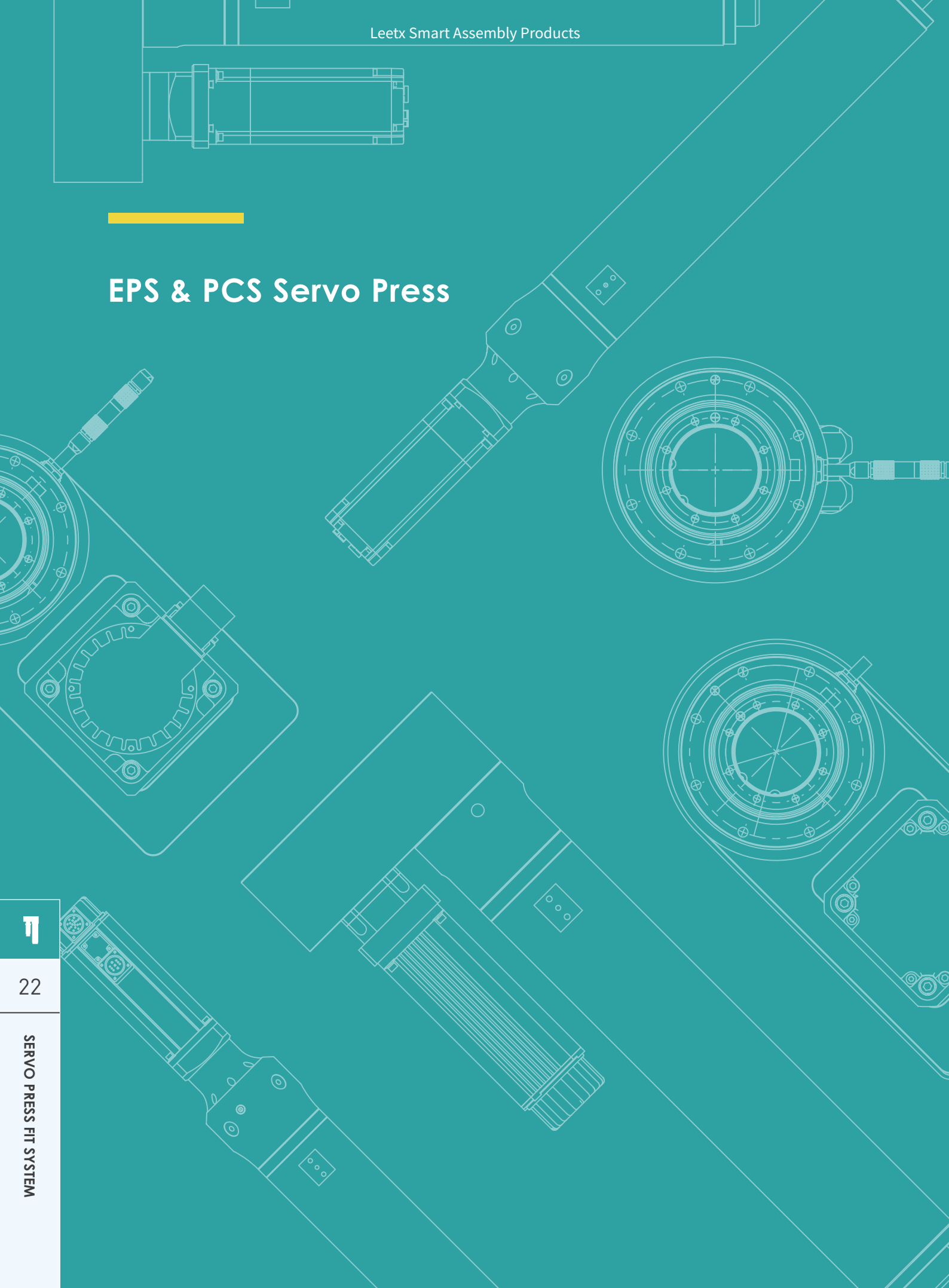

EPS & PCS servo press

Features and advantages

- Covering a standard range of 2 kN - 500 kN and accommodating various application scenarios;
- Two specifications are available—straight and bent—both designed for installation in limited spaces;
- Modular integration solution with robust applicability;
- Integrated absolute position encoder and Integrated high-precision pressure transducer offer customers solutions of exceptional accuracy;
- The integrated motor solution, featuring low inertia and high load, offers enhanced overload resistance and superior long-term stability, making it ideal for demanding industrial settings.

Additional advantages of PCS

- The imported servo configuration ensures superior control of motor axial runout, enhanced concentricity, and reduced noise levels;
- Higher position control accuracy relative to comparable products;
- Lower noise, smaller vibration, creating a comfortable working environment.

Applications

The Leetx servo press is widely used in automated production lines, semi-auto experimental testing platforms or manual operation workstations, etc.



EPSS Servo Press



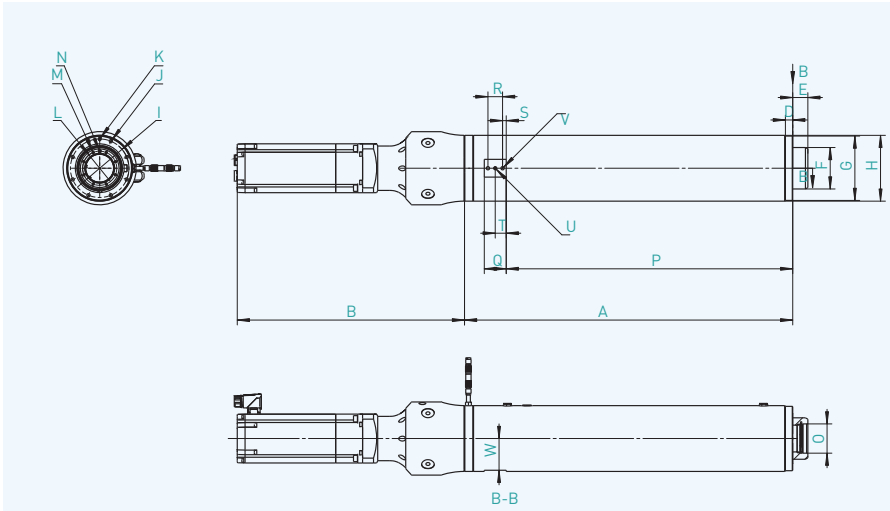

*Leetx® reserves the right to modify the technical parameters and retains the final interpretation of specific model sizes. If you need to customize the model size, please consult with use in advance.

*For non-standard models and products featuring prolonged pressure holding, please consult Leetx sales department.

Model	Stroke	A	B	C	D	E	F	G	H	I	J
EPSS.002.100.250	100	270	175	75	14	18	45	68	70	61	8*M4-8
EPSS.002.200.250	200	370	175	75	14	18	45	68	70	61	8*M4-8
EPSS.005.200.250	200	391	206	90	14.5	18	55	84	85	75	8*M5-10
EPSS.005.400.250	400	591	206	90	14.5	18	55	84	85	75	8*M5-10
EPSS.010.200.250	200	421	367	120	14.5	20	75	112	113	100	8*M6-23
EPSS.010.400.250	400	621	367	120	14.5	20	75	112	113	100	8*M6-23
EPSS.015.200.250	200	421	367	120	14.5	20	75	112	113	100	8*M6-23
EPSS.015.400.250	400	621	367	120	14.5	20	75	112	113	100	8*M6-23
EPSS.030.200.250	200	473	499	150	15	31	85	132	135	120	8*M8-23
EPSS.030.400.250	400	673	499	150	15	31	85	132	135	120	8*M8-23
EPSS.060.200.250	200	537	591	170	15	50	110	156	157	141	12*M10-23
EPSS.060.400.250	400	737	591	170	15	50	110	156	157	141	12*M10-23
EPSS.100.200.150	200	657	592	210	14	50	145	196	200	176	8*M12-30
EPSS.100.400.150	400	857	592	210	14	50	145	196	200	176	8*M12-30
EPSS.150.200.100	200	723	613.5	220	14	50	145	216	220	188	8*M14-28
EPSS.200.200.050	200	723	613.5	220	14	50	145	216	220	188	8*M14-28
EPSS.150.400.100	400	923	613.5	220	14	50	145	216	220	188	8*M14-28
EPSS.200.400.050	400	923	613.5	220	14	50	145	216	220	188	8*M14-28
EPSS.300.200.035	200	715	746	265	22.5	110	180	260	265	235	12*M16-32
EPSS.300.400.035	400	915	746	265	22.5	110	180	260	265	235	12*M16-32

Selection standard

EPS	S	002	200	250
Product series	Press type/ connection method	Pressure range	Stroke	Max. speed
EPS series	S- direct connection	002-2kN	200-200mm	250-250mm/s (2kN-60kN)
	L- folding	005-5kN	400-400mm	150-150mm/s (100kN)
		015-15kN	600-600mm	100-100mm/s (150kN)
		030-30kN		50-50mm/s (200kN)
		060-60kN		35-35mm/s (300kN)
		100-100kN		
		150-150kN		
		200-200kN		
		300-300kN		

K	L	M	N	O	P	Q	R	S	T	U	V	W
ϕ3	37	8*M4-8	ϕ3	30	NA							
ϕ3	37	8*M4-8	ϕ3	30	NA							
ϕ4	44	6*M6-12	ϕ4	35	324	40	25	7.5	20	ϕ4	2*M6-12	39.5
ϕ4	44	6*M6-12	ϕ4	35	524	40	25	7.5	20	ϕ4	2*M6-12	39.5
ϕ5	60	8*M6-12	ϕ5	48	335	45	30	7.5	22.5	ϕ6	2*M6-12	53.5
ϕ5	60	8*M6-12	ϕ5	48	535	45	30	7.5	22.5	ϕ6	2*M6-12	53.5
ϕ5	60	8*M6-12	ϕ5	48	335	45	30	7.5	22.5	ϕ6	2*M6-12	53.5
ϕ5	60	8*M6-12	ϕ5	48	535	45	30	7.5	22.5	ϕ6	2*M6-12	53.5
ϕ6	70	8*M6-12	ϕ6	60	387.5	45	30	7.5	22.5	ϕ6	2*M8-16	65
ϕ6	70	8*M6-12	ϕ6	60	587.5	45	30	7.5	22.5	ϕ6	2*M8-16	65
ϕ8	95	8*M8-16	ϕ6	76	395	70	40	15	35	ϕ8	2*M10-13	75.5
ϕ8	95	8*M8-16	ϕ6	76	595	70	40	15	35	ϕ8	2*M10-13	75.5
ϕ10	125	8*M12-24	ϕ10	110	515	70	40	15	35	ϕ8	2*M12-24	95
ϕ10	125	8*M12-24	ϕ10	110	715	70	40	15	35	ϕ8	2*M12-24	95
ϕ12	125	10*M12-24	ϕ10	110	555	70	40	15	35	ϕ8	2*M12-24	105
ϕ12	125	10*M12-24	ϕ10	110	555	70	40	15	35	ϕ8	2*M12-24	105
ϕ12	125	10*M12-24	ϕ10	110	755	70	40	15	35	ϕ8	2*M12-24	105
ϕ12	125	10*M12-24	ϕ10	110	755	70	40	15	35	ϕ8	2*M12-24	105
NA	150	8*M16-32	ϕ12	126	NA							
NA	150	8*M16-32	ϕ12	126	NA							

EPSL Servo Press



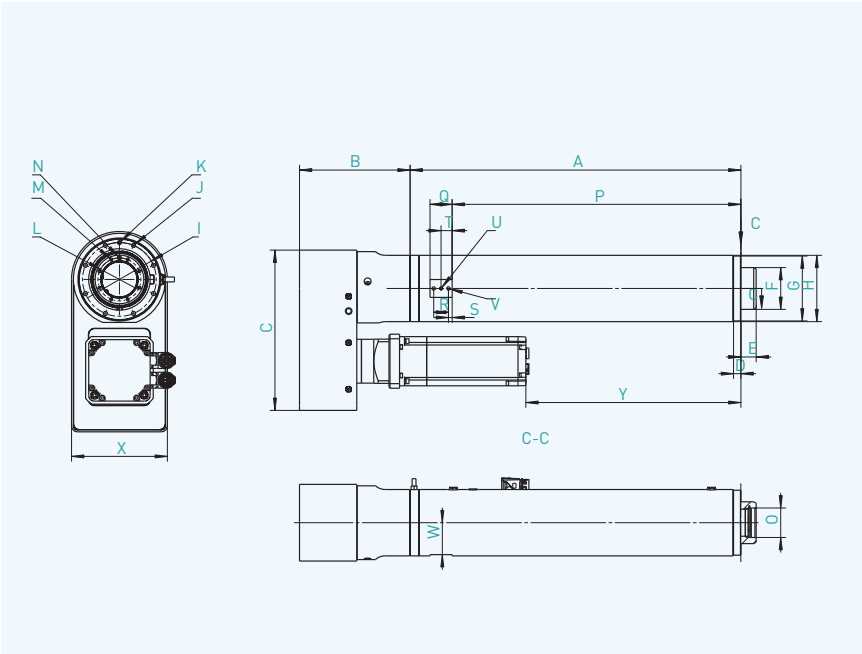

*Leetx® reserves the right to modify the technical parameters and retains the final interpretation of specific model sizes. If you need to customize the model size, please consult with use in advance.

*For non-standard models and products featuring prolonged pressure holding, please consult Leetx sales department.

Model	Stroke	A	B	C	D	E	F	G	H	I	J	K
EPSL.010.200.250	200	421	173.5	294	14.5	20	75	112	113	100	8*M6-23	ϕ5
EPSL.010.400.250	400	621	173.5	294	14.5	20	75	112	113	100	8*M6-23	ϕ5
EPSL.015.200.250	200	421	173.5	294	14.5	20	75	112	113	100	8*M6-23	ϕ5
EPSL.015.400.250	400	621	173.5	294	14.5	20	75	112	113	100	8*M6-23	ϕ5
EPSL.030.200.250	200	473	225	326	15	31	85	132	135	120	8*M8-23	ϕ6
EPSL.030.400.250	400	673	225	326	15	31	85	132	135	120	8*M8-23	ϕ6
EPSL.060.200.250	200	537	226.5	390	15	50	110	156	157	141	12*M10-23	ϕ8
EPSL.060.400.250	400	737	226.5	390	15	50	110	156	157	141	12*M10-23	ϕ8
EPSL.100.200.150	200	657	250	446	14	50	145	196	200	176	8*M12-30	ϕ10
EPSL.100.400.150	400	857	250	446	14	50	145	196	200	176	8*M12-30	ϕ10
EPSL.100.600.150	600	1057	250	446	14	50	145	196	200	176	8*M12-30	ϕ10
EPSL.150.200.100	200	723	163	565	14	50	145	216	220	188	8*M14-28	ϕ12
EPSL.150.400.100	400	923	163	565	14	50	145	216	220	188	8*M14-28	ϕ12
EPSL.200.200.050	200	723	163	565	14	50	145	216	220	188	8*M14-28	ϕ12
EPSL.200.400.050	400	923	163	565	14	50	145	216	220	188	8*M14-28	ϕ12

Selection standard

EPS	L	005	100m	250
Product series	Press type/ connection method	Pressure range	Stroke	Max. speed
EPS series	S- direct connection	005-5kN	100mm	250-250mm/s (5kN-60kN)
	L- folding	015-15kN	200mm	150-150mm/s (100kN)
		030-30kN	400mm	80-80mm/s (150kN-300kN)
		060-60kN		
		100-100kN		
		150-150kN		
		200-200kN		
		300-300kN		

L	M	N	O	P	Q	R	S	T	U	V	W	X	Y
60	8*M6-12	ϕ5	48	335	45	30	7.5	22.5	ϕ6	2*M6-12	53.5	132	243.5
60	8*M6-12	ϕ5	48	535	45	30	7.5	22.5	ϕ6	2*M6-12	53.5	132	443.5
60	8*M6-12	ϕ5	48	335	45	30	7.5	22.5	ϕ6	2*M6-12	53.5	132	243.5
60	8*M6-12	ϕ5	48	535	45	30	7.5	22.5	ϕ6	2*M6-12	53.5	132	443.5
70	8*M6-12	ϕ6	60	387.5	45	30	7.5	22.5	ϕ6	2*M8-16	65	156	225
70	8*M6-12	ϕ6	60	587.5	45	30	7.5	22.5	ϕ6	2*M8-16	65	156	425
95	8*M8-16	ϕ6	76	395	70	40	15	35	ϕ8	2*M10-13	75.5	184	195.5
95	8*M8-16	ϕ6	76	595	70	40	15	35	ϕ8	2*M10-13	75.5	184	395.5
125	8*M12-24	ϕ10	110	515	70	40	15	35	ϕ8	2*M12-24	95	206	322
125	8*M12-24	ϕ10	110	715	70	40	15	35	ϕ8	2*M12-24	95	206	522
125	8*M12-24	ϕ10	110	915	70	40	15	35	ϕ8	2*M12-24	95	206	722
125	10*M12-24	ϕ10	110	555	70	40	15	35	ϕ8	2*M12-24	105	230	447
125	10*M12-24	ϕ10	110	755	70	40	15	35	ϕ8	2*M12-24	105	230	647
125	10*M12-24	ϕ10	110	555	70	40	15	35	ϕ8	2*M12-24	105	230	447
125	10*M12-24	ϕ10	110	755	70	40	15	35	ϕ8	2*M12-24	105	230	647

PCSS Servo Press



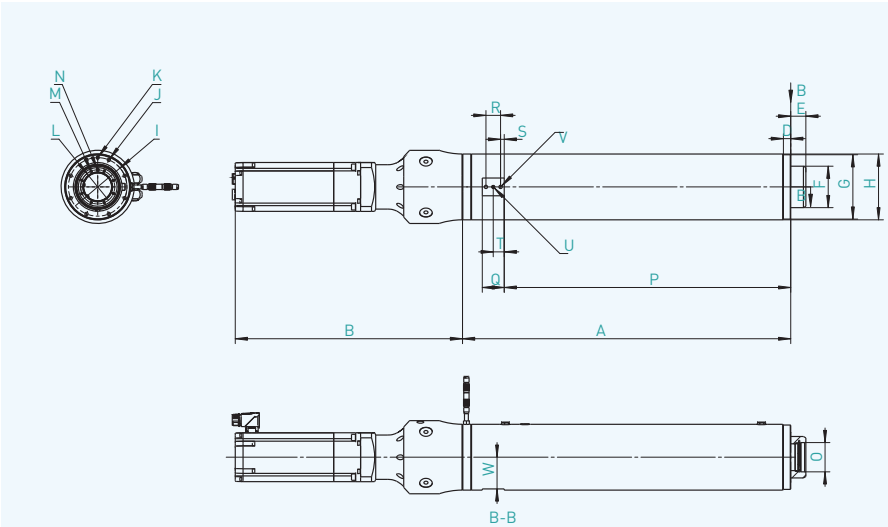

*Leetx® reserves the right to modify the technical parameters and retains the final interpretation of specific model sizes. If you need to customize the model size, please consult with use in advance.

*For non-standard models and products featuring prolonged pressure holding, please consult Leetx sales department.

Model	Stroke	A	B	C	D	E	F	G	H	I	J
PCSS.005.200.250	200	391	224	90	14.5	18	55	84	85	75	8*M5-10
PCSS.005.400.250	400	591	224	90	14.5	18	55	84	85	75	8*M5-10
PCSS.010.200.250	200	421	334	120	14.5	20	75	112	113	100	8*M6-23
PCSS.010.400.250	400	621	334	120	14.5	20	75	112	113	100	8*M6-23
PCSS.015.200.250	200	421	334	120	14.5	20	75	112	113	100	8*M6-23
PCSS.015.400.250	400	621	334	120	14.5	20	75	112	113	100	8*M6-23
PCSS.030.200.250	200	473	466	150	15	31	85	132	135	120	8*M8-23
PCSS.030.400.250	400	673	466	150	15	31	85	132	135	120	8*M8-23
PCSS.060.200.250	200	537	501	170	15	50	110	156	157	141	12*M10-23
PCSS.060.400.250	400	737	501	170	15	50	110	156	157	141	12*M10-23
PCSS.100.200.150	200	657	502	210	14	50	145	196	200	176	8*M12-30
PCSS.100.400.150	400	857	502	210	14	50	145	196	200	176	8*M12-30
PCSS.150.200.100	200	723	628.5	220	14	50	145	216	220	188	8*M14-28
PCSS.200.200.080	200	723	628.5	220	14	50	145	216	220	188	8*M14-28
PCSS.150.400.100	400	923	628.5	220	14	50	145	216	220	188	8*M14-28
PCSS.200.400.080	400	923	628.5	220	14	50	145	216	220	188	8*M14-28
PCSS.300.200.080	200	715	904	265	22.5	110	180	260	265	235	12*M16-32
PCSS.300.400.080	400	915	904	265	22.5	110	180	260	265	235	12*M16-32

Selection standard

PCS	S	005	100m	250
Product series	Press type/ connection method	Pressure range	Stroke	Max. speed
PCS series	S- direct connection	005 (5kN)	100mm	250mm/s (5kN-60kN)
	L- folding	015 (15kN)	200mm	150mm/s (100kN)
		030 (30kN)	400mm	80mm/s (150kN-300kN)
		060 (60kN)		
		100 (100kN)		
		150 (150kN)		
		200 (200kN)		
		300 (300kN)		

K	L	M	N	O	P	Q	R	S	T	U	V	W
ϕ4	44	6*M6-12	ϕ4	35	324	40	25	7.5	20	ϕ4	2*M6-12	39.5
ϕ4	44	6*M6-12	ϕ4	35	524	40	25	7.5	20	ϕ4	2*M6-12	39.5
ϕ5	60	8*M6-12	ϕ5	48	335	45	30	7.5	22.5	ϕ6	2*M6-12	53.5
ϕ5	60	8*M6-12	ϕ5	48	535	45	30	7.5	22.5	ϕ6	2*M6-12	53.5
ϕ5	60	8*M6-12	ϕ5	48	335	45	30	7.5	22.5	ϕ6	2*M6-12	53.5
ϕ5	60	8*M6-12	ϕ5	48	535	45	30	7.5	22.5	ϕ6	2*M6-12	53.5
ϕ6	70	8*M6-12	ϕ6	60	387.5	45	30	7.5	22.5	ϕ6	2*M8-16	65
ϕ6	70	8*M6-12	ϕ6	60	587.5	45	30	7.5	22.5	ϕ6	2*M8-16	65
ϕ8	95	8*M8-16	ϕ6	76	395	70	40	15	35	ϕ8	2*M10-13	75.5
ϕ8	95	8*M8-16	ϕ6	76	595	70	40	15	35	ϕ8	2*M10-13	75.5
ϕ10	125	8*M12-24	ϕ10	110	515	70	40	15	35	ϕ8	2*M12-24	95
ϕ10	125	8*M12-24	ϕ10	110	715	70	40	15	35	ϕ8	2*M12-24	95
ϕ12	125	10*M12-24	ϕ10	110	555	70	40	15	35	ϕ8	2*M12-24	105
ϕ12	125	10*M12-24	ϕ10	110	555	70	40	15	35	ϕ8	2*M12-24	105
ϕ12	125	10*M12-24	ϕ10	110	755	70	40	15	35	ϕ8	2*M12-24	105
ϕ12	125	10*M12-24	ϕ10	110	755	70	40	15	35	ϕ8	2*M12-24	105
NA	150	8*M16-32	ϕ12	126	NA							
NA	150	8*M16-32	ϕ12	126	NA							

PCSL Servo Press



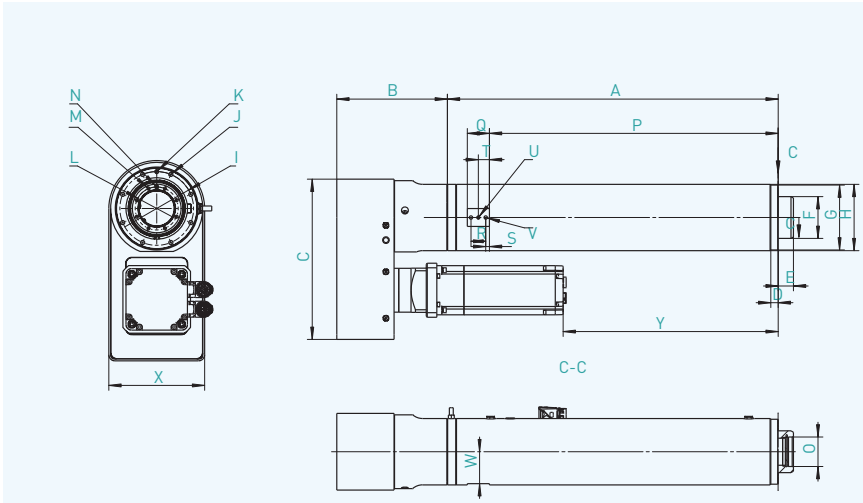

*Leetx® reserves the right to modify the technical parameters and retains the final interpretation of specific model sizes. If you need to customize the model size, please consult with use in advance.

*For non-standard models and products featuring prolonged pressure holding, please consult Leetx sales department.

Model	Stroke	A	B	C	D	E	F	G	H	I	J	K
PCSL.010.200.250	200	421	173.5	294	14.5	20	75	112	113	100	8*M6-23	ϕ5
PCSL.010.400.250	400	621	173.5	294	14.5	20	75	112	113	100	8*M6-23	ϕ5
PCSL.015.200.250	200	421	173.5	294	14.5	20	75	112	113	100	8*M6-23	ϕ5
PCSL.015.400.250	400	621	173.5	294	14.5	20	75	112	113	100	8*M6-23	ϕ5
PCSL.030.200.250	200	473	225	326	15	31	85	132	135	120	8*M8-23	ϕ6
PCSL.030.400.250	400	673	225	326	15	31	85	132	135	120	8*M8-23	ϕ6
PCSL.060.200.250	200	537	226.5	390	15	50	110	156	157	141	12*M10-23	ϕ8
PCSL.060.400.250	400	737	226.5	390	15	50	110	156	157	141	12*M10-23	ϕ8
PCSL.100.200.150	200	657	250	446	14	50	145	196	200	176	8*M12-30	ϕ10
PCSL.100.400.150	400	857	250	446	14	50	145	196	200	176	8*M12-30	ϕ10
PCSL.100.600.150	600	1057	250	446	14	50	145	196	200	176	8*M12-30	ϕ10
PCSL.150.200.100	200	723	163	565	14	50	145	216	220	188	8*M14-28	ϕ12
PCSL.150.400.100	400	923	163	565	14	50	145	216	220	188	8*M14-28	ϕ12
PCSL.200.200.080	200	723	163	565	14	50	145	216	220	188	8*M14-28	ϕ12
PCSL.200.400.080	400	923	163	565	14	50	145	216	220	188	8*M14-28	ϕ12
PCSL.300.200.080	200	715	243	572.5	22.5	110	180	260	265	235	12*M16-32	NA
PCSL.300.400.080	400	915	243	572.5	22.5	110	180	260	265	235	12*M16-32	NA

Selection standard

PCS	L	005	100m	250
Product series	Press type/ connection method	Pressure range	Stroke	Max. speed
PCS series	S- direct connection	005 (5kN)	100 mm	250mm/s (5kN-60kN)
	L- folding	015 (15kN)	200 mm	150mm/s (100kN)
		030 (30kN)	400 mm	80mm/s (150kN-300kN)
		060 (60kN)		
		100 (100kN)		
		150 (150kN)		
		200 (200kN)		
		300 (300kN)		

L	M	N	O	P	Q	R	S	T	U	V	W	X	Y
60	8*M6-12	ϕ5	48	335	45	30	7.5	22.5	ϕ6	2*M6-12	53.5	132	276.5
60	8*M6-12	ϕ5	48	535	45	30	7.5	22.5	ϕ6	2*M6-12	53.5	132	476.5
60	8*M6-12	ϕ5	48	335	45	30	7.5	22.5	ϕ6	2*M6-12	53.5	132	276.5
60	8*M6-12	ϕ5	48	535	45	30	7.5	22.5	ϕ6	2*M6-12	53.5	132	476.5
70	8*M6-12	ϕ6	60	387.5	45	30	7.5	22.5	ϕ6	2*M8-16	65	156	237.5
70	8*M6-12	ϕ6	60	587.5	45	30	7.5	22.5	ϕ6	2*M8-16	65	156	437.5
95	8*M8-16	ϕ6	76	395	70	40	15	35	ϕ8	2*M10-13	75.5	184	285.5
95	8*M8-16	ϕ6	76	595	70	40	15	35	ϕ8	2*M10-13	75.5	184	485.5
125	8*M12-24	ϕ10	110	515	70	40	15	35	ϕ8	2*M12-24	95	206	410
125	8*M12-24	ϕ10	110	715	70	40	15	35	ϕ8	2*M12-24	95	206	610
125	8*M12-24	ϕ10	110	915	70	40	15	35	ϕ8	2*M12-24	95	206	810
125	10*M12-24	ϕ10	110	555	70	40	15	35	ϕ8	2*M12-24	105	230	237.5
125	10*M12-24	ϕ10	110	755	70	40	15	35	ϕ8	2*M12-24	105	230	437.5
125	10*M12-24	ϕ10	110	555	70	40	15	35	ϕ8	2*M12-24	105	230	237.5
125	10*M12-24	ϕ10	110	755	70	40	15	35	ϕ8	2*M12-24	105	230	437.5
150	8*M16-32	ϕ12	126	NA								285	54
150	8*M16-32	ϕ12	126	NA								285	254

EPS

Model	EPS002	EPS005	EPS010	EPS015	EPS030	EPS060	EPS100	EPS150	EPS200	EPS300	EPS500
Rated pressure (KN)	2	5	10	15	30	60	100	150	200	300	500
Stroke(mm)	100/200	200/400/600	200/400/600	200/400/600	200/400/600	200/400/600	200/400/600	200/400/600	200/400/600	200/400/600	200/400/600
Max. operating speed (mm/s)	250	250	250	250	250	250	150	100	50	35	
Max. allowable tool weight (kg)	10	30	60	60	80	100	100	200	200	300	
Service life under standard condition	10 million cycles										
System overload	10% rated pressure (10%FS)										
Type of pressure transducer	Strain type										
Measurement range of pressure transducer (KN)	-2-2	-5-5	-10-10	-15-15	-30-30	-60-60	-100-100	-150-150	-200-2000	-300-300	-500-500
Position repeatability accuracy (mm)	0.01										
Measurement accuracy of pressure transducer	0.5% rated pressure (≤0.5%FS)										
Pressure linear error	1% rated pressure (≤1%FS)										
Min. displacement resolution (mm)	0.001										
Main power supply	Single-phase AC200V-240V, +10~-15%, 50/60Hz		Three-phase AC380V-440V, +10~-15%, 50/60Hz								
Power(KW)	0.25	0.75	2.5	2.5	2.5	5	5	5	5	5	5
Weight	/11.5		37.5//	38.5//		170//	//270				
Technical parameters of software system											
Channel	1 channel for displacement, 1 channel for force										
External displacement transducer	Supported										
Sampling frequency	10KHZ										
Channel sampling rate	24bit										
Evaluated accuracy of control system	0.003										
Low-pass filtering	0.1~2000 Hz										
Measurement curve drawing	Y=f(X), Y=f(t), Y=f(x,t), X=f(t)										
Curve collection point	500,000 points										
Offline data recording	Up to 10 million records										
Installation of software IPC	Supported										
Split screen display	Monitoring multiple window information										
IO channel	16 inputs, 16 outputs										
Bus type	Profinet / Ethernet IP / EtherCAT / CC-link / Modbus TCP / DeviceNet / CC-link IE / Profibus / CANopen / BACnet / Common EtherCAT/UDP etc.										
Evaluation window function	Vertical line, horizontal line, rectangle, horizontal trapezoid, vertical trapezoid, real-time stop, mean force, time calculation, speed calculation, inflection point calculation, X hysteresis line judgment, Y hysteresis line judgment, envelope calculation, digital signal input judgment, force difference judgment, X gradient calculation, Y gradient calculation										

PCS

Model	PCS005	PCS010	PCS015	PCS030	PCS060	PCS100	PCS150	PCS200	PCS300	PCS500
Rated pressure (KN)	5	10	15	30	60	100	150	200	300	500
Stroke(mm)	200/400/600	200/400/600	200/400/600	200/400/600	200/400/600	200/400/600	200/400/600	200/400/600	200/400/600	200/400/600
Max. operating speed (mm/s)	250	250	250	250	250	150	100	80	80	
Service life under standard condition	15 million cycles (in standard exercise scenario)									
System overload	10% rated pressure (10%FS)									
Type of pressure transducer	Strain type									
Measurement range of pressure transducer (KN)	-5-5	-10-10	-15-15	-30-30	-60-60	-100-100	-150-150	-200-200	-300-300	-500-500
Position repeatability accuracy (mm)	0.01									
Measurement accuracy of pressure transducer	0.5% rated pressure (≤0.5%FS)									
Pressure linear error	1% rated pressure (≤1%FS)									
Min. displacement resolution (mm)	0.001									
Type of encoder	Absolute encoder									
Main power supply	380V-400V									
Power(KW)	0.691	3.6			6.9		11.6		19.4	/
Weight		37.5//								
Technical parameters of software system										
Channel	1 channel for displacement, 1 channel for force									
External displacement transducer	Supported									
Sampling frequency	10KHZ									
Channel sampling rate	24bit									
Evaluated accuracy of control system	0.003									
Low-pass filtering	0.1~2000 Hz									
Measurement curve drawing	Y=f(X), Y=f(t), Y=f(x,t), X=f(t)									
Curve collection point	500,000 points									
Offline data recording	Up to 10 million records									
Installation of software IPC	Supported									
Split screen display	Monitoring multiple window information									
IO channel	16 inputs, 16 outputs									
Bus type	Profinet / Ethernet IP / EtherCAT / CC-link / Modbus TCP / DeviceNet / CC-link IE / Profibus / CANopen / BACnet / Common EtherCAT/UDP etc.									
Evaluation window function	Vertical line, horizontal line, rectangle, horizontal trapezoid, vertical trapezoid, real-time stop, mean force, time calculation, speed calculation, inflection point calculation, X hysteresis line judgment, Y hysteresis line judgment, envelope calculation, digital signal input judgment, force difference judgment, X gradient calculation, Y gradient calculation									

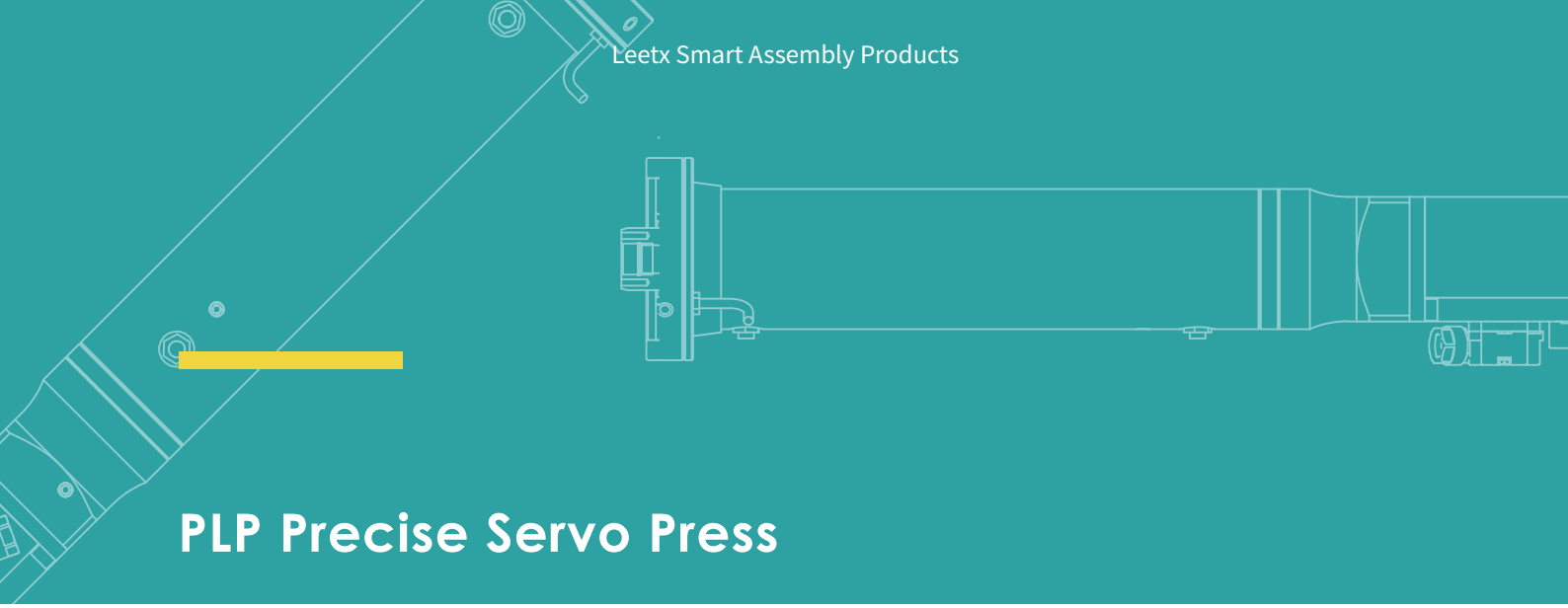

PLP Precise Servo Press

Features and advantages

- The PLP features an integrated high-precision pressure transducer, achieving the pressure control accuracy of up to 0.5%;
- The drive motor integrates a precise absolute position encoder, suitable for ultra-precision assembly tasks with a load of 200 N or 500 N;
- Real-time monitoring of pressure and displacement throughout the production process;
- Lightweight and compact in structure, often used in conjunction with small robots.

Applications

- Suitable for both automated production lines and manual workstations;
- Commonly used in the medical industry for production, product testing, and in the precision manufacturing industry for manufacturing of watches, small motors, and elasticity testing.

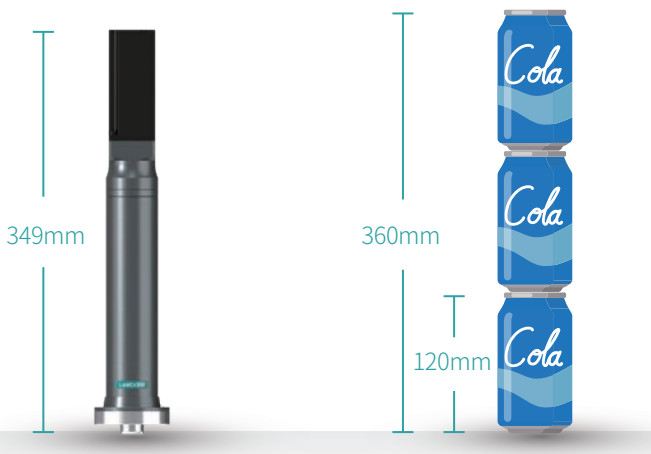

PLP Precise Servo Press

The novel transducer structure design featuring integration of the pressure transducer eliminates the issue of friction force and addresses the challenges associated with transducer cable interference and connector collisions during fixture installation in conventional design.

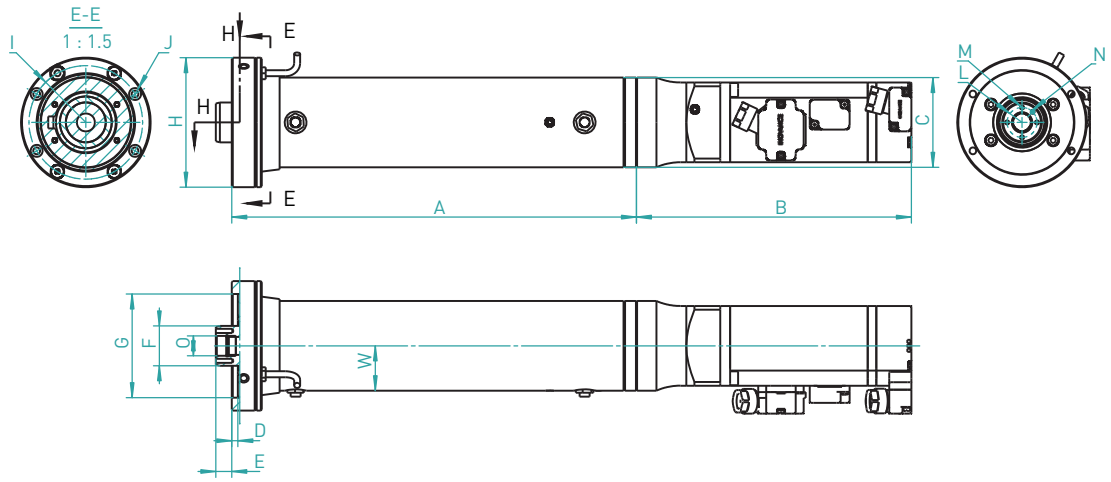

*Leetx reserves the right to modify the technical parameters and retains the final interpretation of specific model sizes. If you need to customize the model size, please consult with use in advance.

*For non-standard models, please consult Leetx sales department.

Model	Stroke	A	B	C	D	E	F	G	H	I	J	K	L	M	N	O
PLPS.002.100.225	100	203	138	45	3	8	20	52	65	57	"4*Φ3.4 penetration, counterbore Φ6, 3.4 deep"	NA	15	4*M2.5-6	φ2	10
PLPS.005.100.225	100	203	138	45	3	8	20	52	65	57	"4*Φ3.4 penetration, counterbore Φ6, 3.4 deep"	NA	15	4*M2.5-6	φ2	10

Selection standard

PLP	-	002	100	200
Product series	Press type/ connection method	Pressure range	Stroke	Max. speed
PLPS series	Direct connection	200 (200N)	100-100 mm	200mm/s
		500 (500N)	200-200 mm	

PLP

Model	PLP002	PLP005
Rated pressure (N)	200	500
Stroke (mm)	100	100
Max. operating speed (mm/s)	200	200
Max. allowable tool weight (kg)	2	2
Service life under standard condition	10 million cycles	
System overload	10% rated pressure (10%FS)	
Type of pressure transducer	Strain type	
Measurement range of pressure transducer (KN)	-0.2-0.2	-0.5-0.5
Position repeatability accuracy (mm)	0.01	
Measurement accuracy of pressure transducer	0.5% rated pressure (⩽0.5%FS)	
Pressure linear error	1% rated pressure (⩽1%FS)	
Min. displacement resolution (mm)	0.001	
Main power supply	Single-phase AC200V-240V, +10~-15%, 50/60Hz	
Power(KW)	0.05	
Weight	2	
Technical parameters of software system		
Channel	1 channel for displacement, 1 channel for force	
External displacement transducer	Supported	
Sampling frequency	10KHZ	
Channel sampling rate	24bit	
Evaluated accuracy of control system	0.003	
Low-pass filtering	0.1~2000 Hz	
Measurement curve drawing	Y=f(X), Y=f(t), Y=f(x,t), X=f(t)	
Curve collection point	500,000 points	
Offline data recording	Up to 10 million records	
Installation of software IPC	Supported	
Split screen display	Monitoring multiple window information	
IO channel	16 inputs, 16 outputs	
Bus type	Profinet / Ethernet IP / EtherCAT / CC-link / Modbus TCP / DeviceNet / CC-link IE / Profibus / CANopen / BACnet / Common EtherCAT/UDP etc.	
Evaluation window function	Vertical line, horizontal line, rectangle, horizontal trapezoid, vertical trapezoid, real-time stop, mean force, time calculation, speed calculation, inflection point calculation, X hysteresis line judgment, Y hysteresis line judgment, envelope calculation, digital signal input judgment, force difference judgment, X gradient calculation, Y gradient calculation	

RLP Rotational Servo Press

Features

- The RLP integrates two sets of servo control systems and transducers to enable numerical control of pressure, displacement, rotation torque, and rotation angle;
- Capable of exerting up to 60 kN of pressure and delivering torque up to 200 N · m, it is well-suited for assembly and connection tasks involving both rotational and linear movements;
- Synchronization of torque output and pressure control, real-time collection of pressure and torque curves, with data traceability;
- Multiple control modes, including synchronous rotation and pressing, as well as rotation followed by pressing and pressing followed by rotation, are available to accommodate a range of on-site application scenarios.

Applications

- Suitable for both automated production lines and manual workstations;
- Commonly used in scenarios such as keyway fitting of shaft gears, preloading of bearings, press-fitting of oil seals, self-driving torque testing, injection molding, washer selection, and adjustment of bearing clearances.



RLP Rotational Servo Press

The integration of a servo press with tightening capabilities accommodates the simultaneous requirements of pressing and tightening.

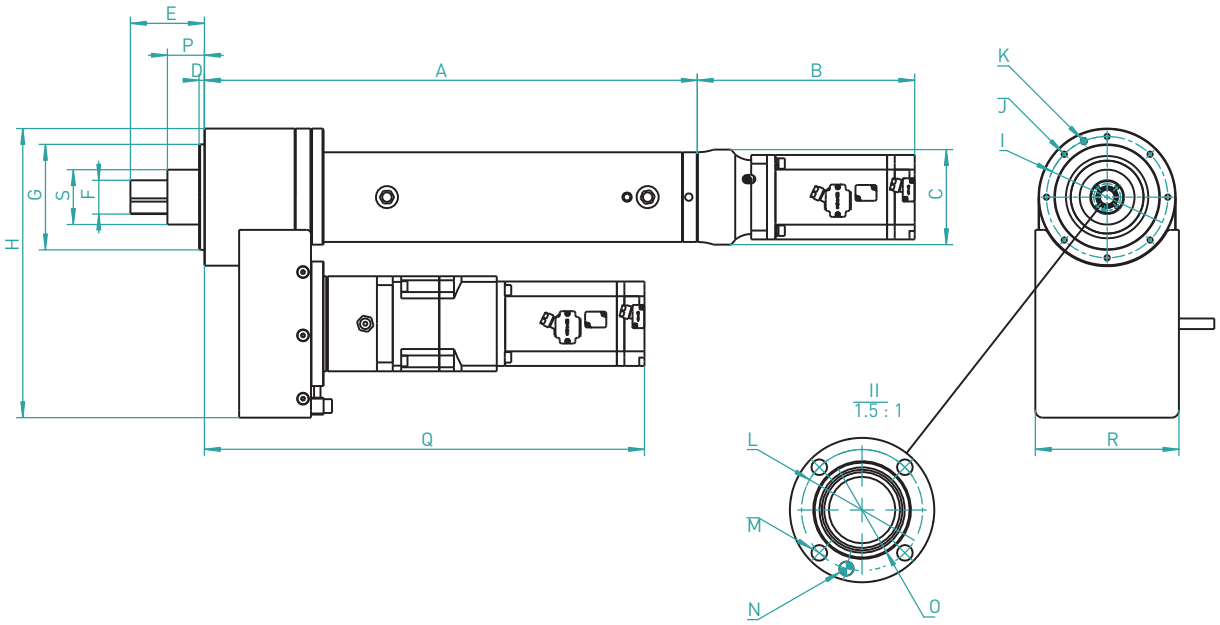

*Leetx reserves the right to modify the technical parameters and retains the final interpretation of specific model sizes. If you need to customize the model size, please consult with use in advance.

*For non-standard models, please consult Leetx sales department.

Pressure(KN)	Torque(Nm)	Stoke	A	B	C	D	E	F	G	H	I	J
1	400	200	467	206	90	5	70	32	100	274	114	8*M6-12

K	L	M	N	O	P	Q	R	S
ϕ6	25.5	4*M4-8	ϕ3	20	35	417	136	52

Selection standard

RLP	005	200	200	20	250
Product series	Range of press	Stroke	Operating speed	Operating torque	Operating speed
RLP series	005（5KN）	200-200mm	200mm/s	20-20N.M	250-250rpm

RLP

Model	RLP						
Rated pressure (KN)	1	5	12	20	30	40	60
Rated torque (N·M)	20/50/100	20/50/ 100/200	20/50/ 100/200	20/50/ 100/200	20/50/ 100/200	20/50/ 100/200	20/50/ 100/200
Stroke(mm)	100/200	200	400	400	400	400	400
Max. operating speed (mm/s)	200	200	200	200	175	200	150
Max. operating speed (rpm)	250						
Service life under standard condition	10 million cycles						
System overload	10% rated pressure (10%FS)						
Type of pressure/torque transducer	Strain type						
Measurement range of pressure transducer (KN)	-1-1	-5 -5	-12 -12	-20 -20	-30 -30	-40-40	-60 -60
Position repeatability accuracy (mm)	0.01						
Measurement accuracy of pressure/torque transducer	0.5% rated pressure (≤0.5%FS)						
Pressure linear error	1% rated pressure (≤1%FS)						
Min. displacement resolution (mm)	0.001						
Torque linear error	1% rated torque (≤1%FS)						
Angle repeatability accuracy (Grad)	0.1						
Technical parameters of software system							
Channel	1 channel for displacement, 1 channel for force						
External displacement transducer	Supported						
Sampling frequency	10KHZ						
Channel sampling rate	24bit						
Evaluated accuracy of control system	0.003						
Low-pass filtering	0.1~2000 Hz						
Measurement curve drawing	Y=f(X), Y=f(t), Y=f(x,t), X=f(t)						
Curve collection point	500,000 points						
Offline data recording	Up to 10 million records						
Installation of software IPC	Supported						
Split screen display	Monitoring multiple window information						
IO channel	16 inputs, 16 outputs						
Bus type	Profinet / Ethernet IP / EtherCAT / CC-link / Modbus TCP / DeviceNet / CC-link IE / Profibus / CANopen / BACnet / Common EtherCAT/UDP etc.						
Evaluation window function	Vertical line, horizontal line, rectangle, horizontal trapezoid, vertical trapezoid, real-time stop, mean force, time calculation, speed calculation, inflection point calculation, X hysteresis line judgment, Y hysteresis line judgment, envelope calculation, digital signal input judgment, force difference judgment, X gradient calculation, Y gradient calculation						

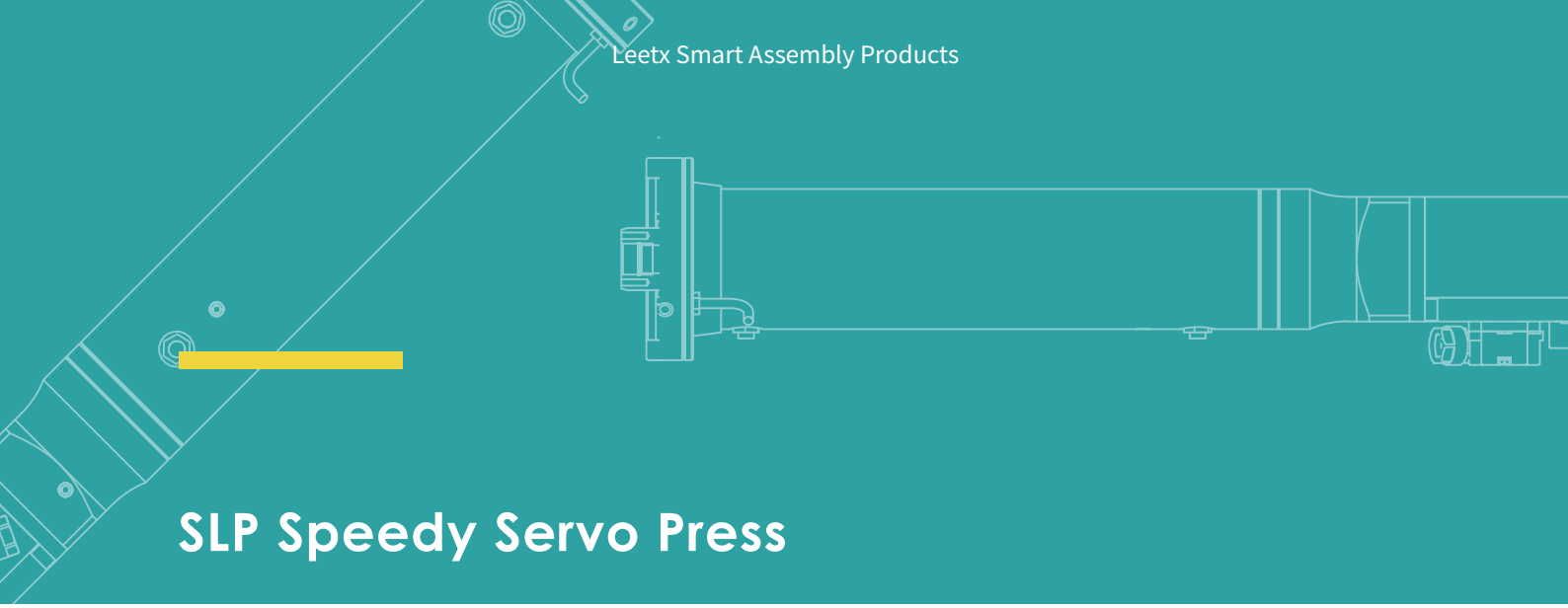

SLP Speedy Servo Press

Features

- The SLP comes with an integrated strain type pressure transducer, suitable for precision pressing up to 30 kN. It enables online monitoring of the entire production process and data traceability.
- The press can achieve a maximum speed of 600 mm/s, accommodating scenarios that demand short cycle time.

Applications

- SLP is suitable for automatic production lines or manual workstations.
- Boasting high-speed operation capabilities, it serves applications requiring short cycle time, such as engine guide seat rings and bowl-shaped plugs.

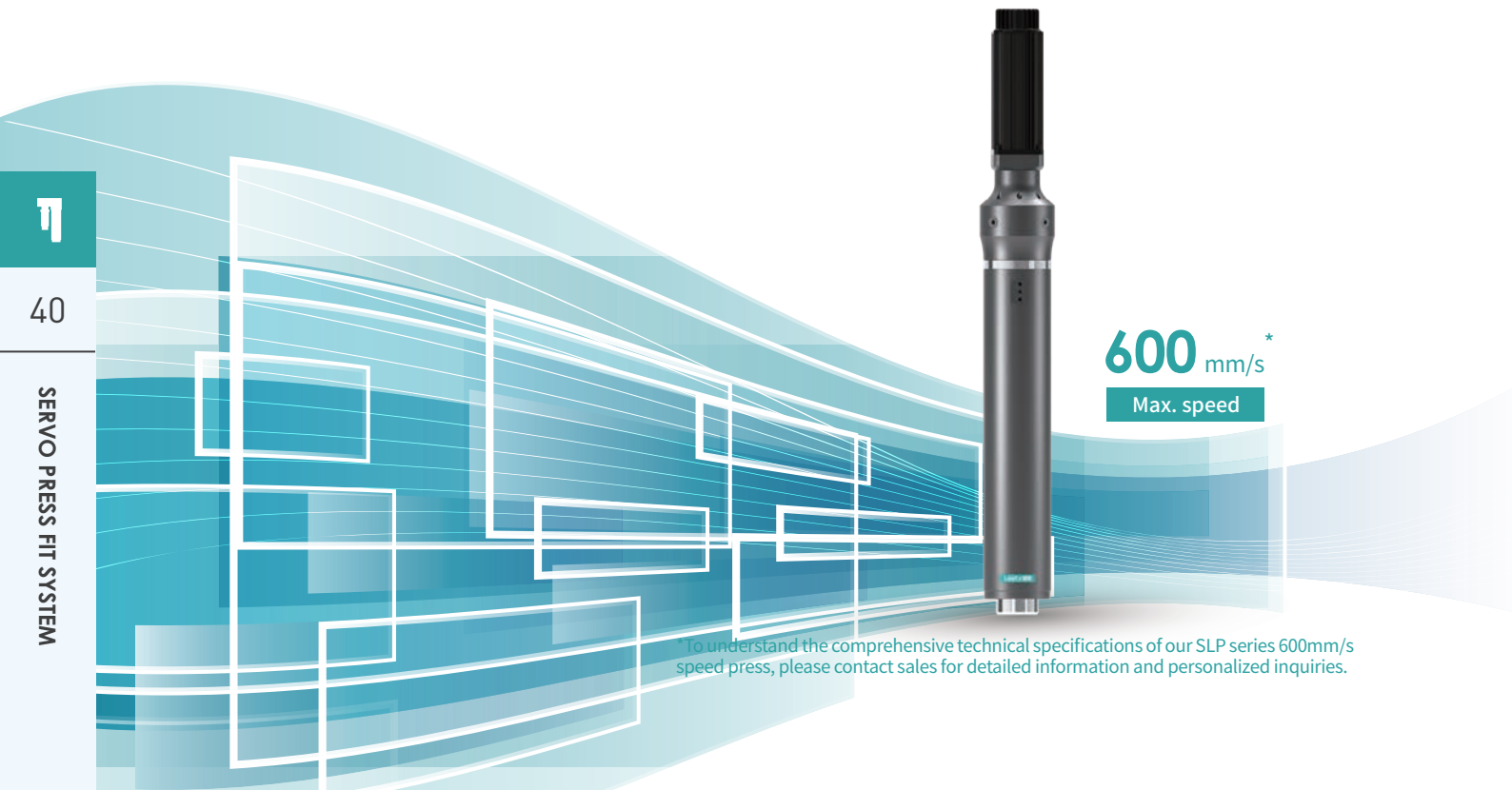

*To understand the comprehensive technical specifications of our SLP series 600mm/s speed press, please contact sales for detailed information and personalized inquiries.

SLP Speedy Servo Press

SLPS falls into the Leetx speedy servo press line, capable of reaching a maximum speed of 600 mm/s.

It is mainly used in workstations requiring a short cycle time in pressing process such as for engine guide seat rings and bowl-shaped plugs.

Aiming at elevating quality and efficiency, the servo structure is further upgraded, offering integrated speedy assembly solutions to enhance production capacity and efficiency for customers.

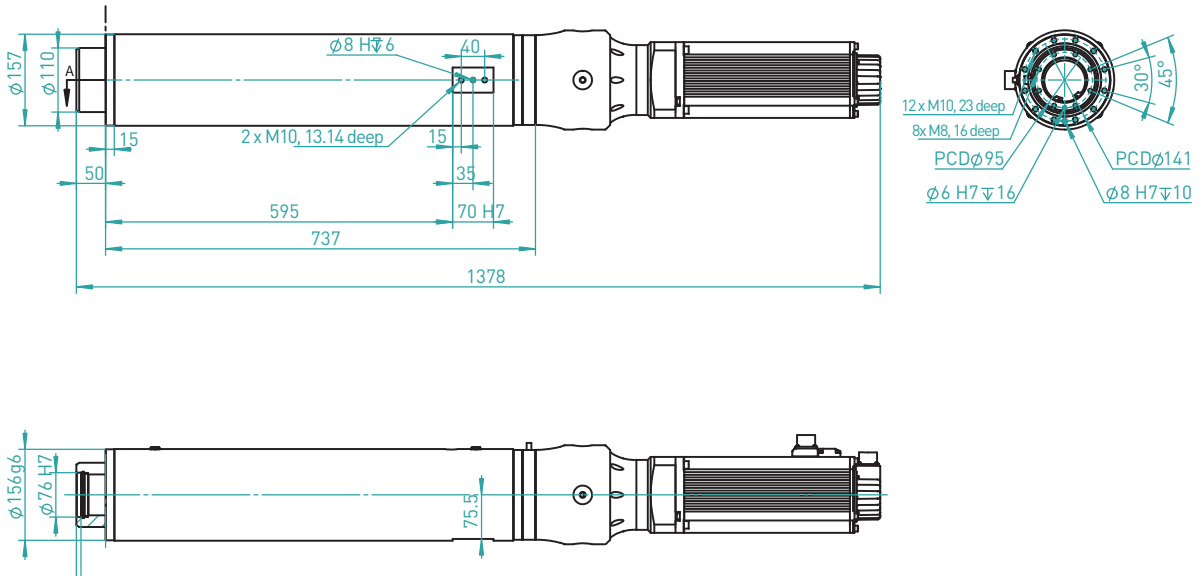

Model	Stoke	A	B	C	D	E	F	G	H	I	J
SLPS.030.400.500	400	737	591	170	15	50	110	156	157	141	12*M10-23

Model	K	L	M	N	O	P	Q	R	S	T	U	V	W
SLPS.030.400.500	737	591	170	15	50	110	156	157	141	141	141	141	141

Selection standard

SLP	S	030	400	500
Product series	Press type/ connection method	Pressure range	Stroke	Max. speed
SLP series	S- direct connection	030-30N	400-400mm	500-500mm/s

SLP

Model	SLP030
Rated pressure (KN)	30
Stroke(mm)	400
Max. operating speed (mm/s)	500
Max. allowable tool weight (kg)	80
Service life under standard condition	10 million cycles
System overload	10% rated pressure (10%FS)
Type of pressure transducer	Strain type
Measurement range of pressure transducer (KN)	-30-30
Position repeatability accuracy (mm)	0.01
Measurement accuracy of pressure transducer	0.5% rated pressure (≤0.5%FS)
Pressure linear error	1% rated pressure (≤1%FS)
Min. displacement resolution (mm)	0.001
Main power supply	Three-phase AC380V-440V, +10~-15%, 50/60Hz
Power(KW)	5
Technical parameters of software system	
Channel	1 channel for displacement, 1 channel for force
External displacement transducer	Supported
Sampling frequency	10KHZ
Channel sampling rate	24bit
Evaluated accuracy of control system	0.003
Low-pass filtering	0.1~2000 Hz
Measurement curve drawing	Y=f(X), Y=f(t), Y=f(x,t), X=f(t)
Curve collection point	500,000 points
Offline data recording	Up to 10 million records
Installation of software IPC	Supported
Split screen display	Monitoring multiple window information
IO channel	16 inputs, 16 outputs
Bus type	Profinet / Ethernet IP / EtherCAT / CC-link / Modbus TCP / DeviceNet /CC-link IE / Profibus / CANopen / BACnet / Common EtherCAT/UDP etc.
Evaluation window function	Vertical line, horizontal line, rectangle, horizontal trapezoid, vertical trapezoid, real-time stop, mean force, time calculation, speed calculation, inflection point calculation, X hysteresis line judgment, Y hysteresis line judgment, envelope calculation, digital signal input judgment, force difference judgment, X gradient calculation, Y gradient calculation

Leetx Smart Assembly Products

