Vitrans

Vitrans Automation

2025

Belt Conveyor

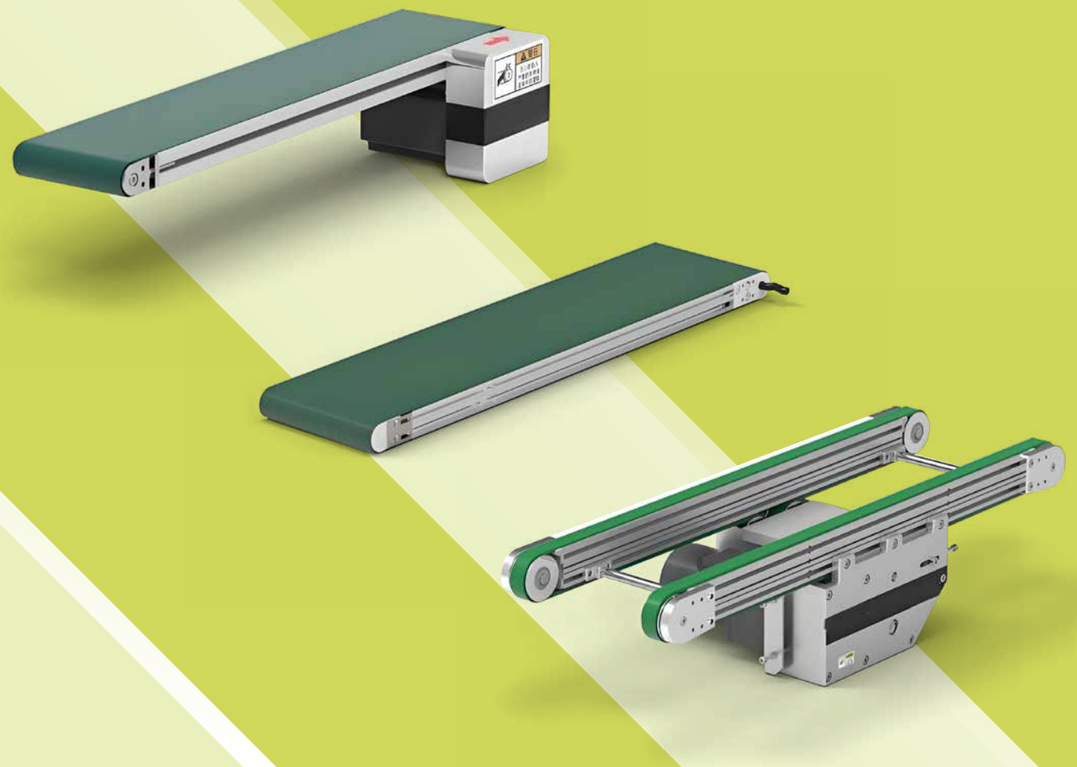

Dongguan Vitrans Automation Equipment Co.,Ltd

Website
www.vitrans-conveyor.com

Email
Qingsong.xu@vitrans.cn



Vitrans conveyor is professional manufacturer for conveying solution R&D, production and sales.

Our conveyor is widely used in automated production line and it is exporting to all over the world..
The product range covers modular pallet conveyor, belt conveyor, flexible chain conveyor and roller conveyÅ or. They are adapt to different application, various layout design with different product size and weight.

We can also support conveying solution customization.

About Vitrans
5000+ Project Experience

Focus on conveyor manufacturing for industrial automation.
Product verification by over 10000 hours testing.

Various conveying solution for industries







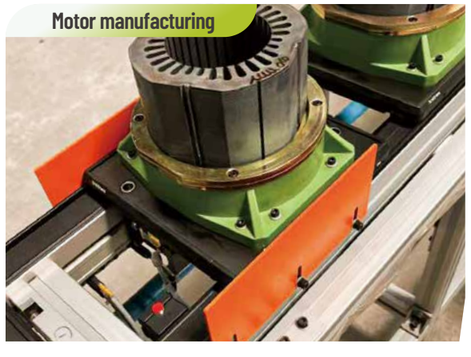

Advantages

Authoritative certification & Quality assurance

01 Experienced manufacturer

Vitrans has focused on conveyor manufacturing and application for over 12years.

02 Competitive quality and price

Reduce costs and improve product quality through scientific management and product standardization.

03 Strict quality control

Strict process control from parts manufacturing, assembling, qualifying, packing and outgoing.

04 Efficient service

Branch offices and agents cover Asia, Europe and America to provide technical support and after-sale service.







Factory Overview



Belt Conveyor









Product Certificate





Patent Certificate

Product Overview

Flat Belt Conveyor Precision Type

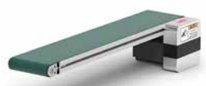

Roller diameterØ20mm P01

BCQ01/BCQ51
End drive-Overall belt
Small load



Roller diameterØ20mm P03

BCN01/BCN51
Middle drive-Overall belt
Small load

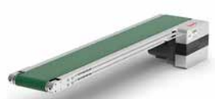

Roller diameterØ20mm P05

BQT01/BQT51
End drive-Standard type
Smallt load



Roller diameterØ30mm P07

BQZ01/BQZ51
Middle drive-Standard type
Small load

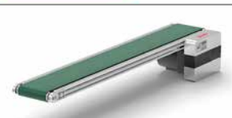

Roller diameterØ30mm P09

BET01/BET51
End drive-Standard type
Small load

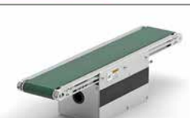

Roller diameterØ30mm P11

BEZ01/BEZ51
Middle drive-Standard type
Small load



Roller diameterØ30mm P13

BEC01/BEC51
Middle drive-Standard type
Small load

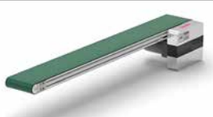

Roller diameterØ30mm P15

BEQ01/BEQ51
End drive-Overall belt
Small load

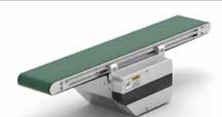

Roller diameterØ30mm P17

BEN01/BEN51
Middle drive-Overall belt
Small load



Roller diameterØ30mm P19

BED51
Middle drive-Narrow type
Small load

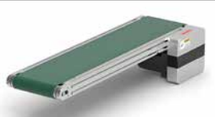

Roller diameterØ40mm P21

BFT01/BFT51
End drive-EU aluminum profile
Small to medium load



Roller diameterØ40mm P23

BFZ01/BFZ51
Middle drive-EU aluminum profile
Small to medium load

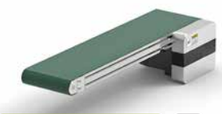

Roller diameterØ40mm P25

BFQ01/BFQ51
End drive-Overall belt
Small to medium load

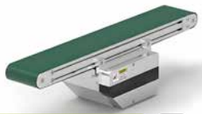

Roller diameterØ40mm P27

BFN01/BFN51
Middle drive-Overall belt
Small to medium load



Roller diameterØ50mm P29

BWT01/BWT51
End drive-Standard type
Medium load

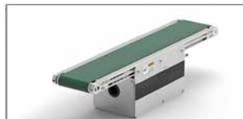

Roller diameterØ50mm P31

BWZ01/BWZ51
Middle drive-Standard type
Medium load



Roller diameterØ50mm P33

BWC01/BWC51
Middle drive-Standard type
Medium load

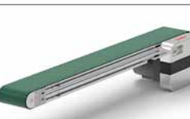

Roller diameterØ50mm P35

BWQ01/BWQ51
End drive-Overall belt
Medium load

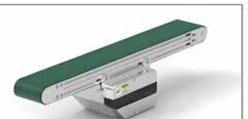

Roller diameterØ50mm P37

BWN01/BWN51
Middle drive-Overall belt
Medium load

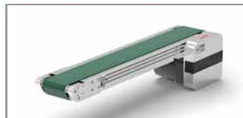

Roller diameterØ30/Ø60mm P39

BGT01/BGT51
End drive-Sharp end
Big load

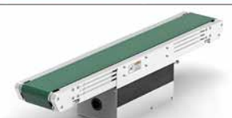

Roller diameterØ30/Ø60mm P41

BGZ01/BGZ51
Middle drive-Sharp end
Big load

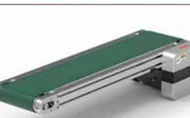

Roller diameterØ60mm P43

BLT01/BLT51
End drive- Standard type
Big load

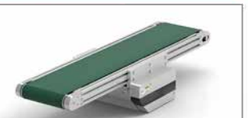

Roller diameterØ60mm P45

BLZ01/BLZ51
Middle drive- Standard type
Big load



Roller diameterØ80mm P47

BBT01/BBT51
End drive- Chain drive
Big load



Roller diameterØ80mm P49

BBZ01/BBZ51
Middle drive- Chain drive
Big load

Flat Belt Conveyor Build-in Drive



Roller diameterØ30mm P51

BAE01/BAE21
Electric roller drive-Standard type

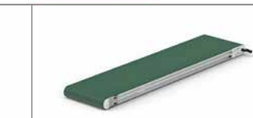

Roller diameterØ30mm P53

BAE31/BAE51
Electric roller drive-Overall belt



Roller diameterØ40mm P55

BAS01/BAS21
Electric roller drive-Standard type

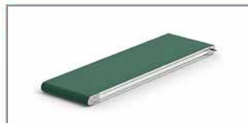

Roller diameterØ40mm P57

BAS31/BAS51
Electric roller drive-Overall belt



Roller diameterØ50mm P59

BAW01/BAW21
Electric roller drive-Standard type



Roller diameterØ50mm P61

BAW31/BAW51
Electric roller drive-Overall belt



Roller diameterØ60mm P63

BAL01/BAL21
Electric roller drive-Standard type



Roller diameterØ60mm P65

BAL31/BAL51
Electric roller drive-Overall belt



Roller diameterØ70mm P67

BAQ01
Build-in motor drive-Standard type



Roller diameterØ80mm P69

BAB01/BAB21
Electric roller drive-Standard type



Roller diameterØ80mm P71

BAB31/BAB51
Electric roller drive-Overall belt

Flat Belt Conveyor Customized belt with boards.



Roller diameterØ50mm P73

BDT51
End drive- Customized belt with boards.

Flat Belt Conveyor Backlight belt



Roller diameterØ50mm P75

BST01
End drive-Standard type



Roller diameterØ50mm P77

BSZ01
Middle drive- Standard type



Roller diameterØ60mm P79

BSQ01
Middle drive- Overall belt

Product Overview



Roller diameterØ50mm P81

BSN01
Middle drive- Chain drive- Overall belt

One lane timing belt conveyor



Timing belt conveyor width 10mm P83

BTA01-B10
End drive-One lane conveyor



Timing belt conveyor width 10mm P85

BTB01-B10
Middle drive-One lane conveyor



Timing belt conveyor width 20mm P87

BTA01-B20
End drive-One lane conveyor



Timing belt conveyor width 20mm P89

BTB01-B20
Middle drive-One lane conveyor

Dual lanes timing belt conveyor

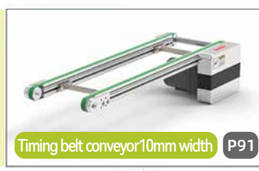

Timing belt conveyor10mm width P91

BTH01
End drive-Dual lanes conveyor

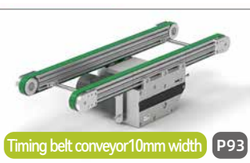

Timing belt conveyor10mm width P93

BTM01
Middle drive-Dual lanes conveyor



Timing belt conveyor20mm width P95

BTJ01
End drive-Dual lanes conveyor

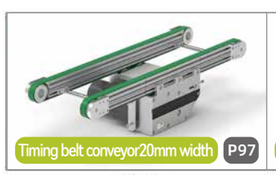

Timing belt conveyor20mm width P97

BTN01
Middle drive-Dual lanes conveyor



Timing belt conveyor20mm width P99

BTQ01
End drive-Build
in motor dual lanes conveyor

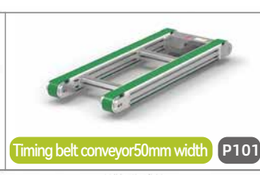

Timing belt conveyor50mm width P101

BTR01
End drive-Build
in motor dual lanes conveyor



Timing belt conveyor50mm width P103

BTP01
End drive-Dual lanes conveyor

Roller Chain Conveyor Plastic chain



带轮直径∅39mm P105

BRZ01
Middle drive-One lane roller
chain conveyor-Big load



带轮直径∅57mm P107

BRT01
End drive-One lane roller
chain conveyor-40P Plastic chain



带轮直径∅57mm P109

BRT21
End drive-Dual lanes roller
chain conveyor-40P Plastic chain

Conveyor Accessories



P111

BSV01
I Type-Single support leg



P111

BSV02
H Type-Dual supports leg



P112

BSV04
H Type-Extension leg-Small load



P112

BSV06
H Type-Extension leg-Medium load



P113

BSV08
H Type-Extension leg-Big load



P113

BSV10
Lifting leg-General type



P114

BDS01
Guide profile accessory-Plastic type



P114

BDS02
Guide profile accessory-Steel type



P114

BDS05
Guide profile-C shape



P114

BDS06
Guide profile support



P115

BDS11
Speed controller mounting board



P115

BDS12
Speed controller case

Single Slot Aluminum Profile

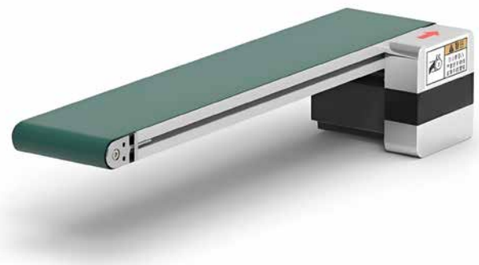

Conveyor Features

Adapt to limited space for small parts transferring

※ Please do not exceed the allowed conveyor load and length. Belt thickness should be smaller than 1.2mm due to belt roller diameter.

Series Code	Type	※ Conveyor Features		Material			Surface Treatment		
		Application Features	Motion Features	Aluminum Profile	Motor Cover	Pulley Mounting Board	Aluminum Profile	Motor Cover	Pulley Mounting Board
BCQ01	Arcuate roller to avoid belt shift	Belt with good flatness	One-way transfer	Alloy			Surface electrophoresis	Painting	
BCQ51	Belt guide rib to avoid belt shift	Belt runs stable, but guide rib may be slight protrusion.	Forward/Reverse transfer						

Model		❸L-Conveyor Length 5mm	Motor Options												❽ Belt Spec	❾ Motor Brand
❶ Series Code	❷B-Belt Width		❹ Output Power(W)	❺ Voltage(V)	❻ Motor Type	❼ Gear box ratio										
BCQ01 Arcuate roller BCQ51 Belt with guide rib	60~150 Min.Step (5:mm)	120~800	6	TA220 Single phase	IM Fix-speed motor SCM Speed adjustable motor	5 7.5 10 12.5 15 18 25 30 36 50 60 75 90 100 120 150 180 ⚠ When motor power is 6W gear box ratio can not be 5~10.									H(Blackish green) H6(Bright green) B(Brown) D(Black-ESD) F(White-Food grade) U(Blackish green-accumulation) M1(Blue- Blue-oil resistance) Q2(Green-incline application)	GPG JSCC No motor
			25	DC24 DC TA220 Single phase	KMC Speed adjustable motor SWS Motor with drive											ZD No motor
			❹ Motor Series	❺ Control method	❻ Output torque	❼ Drive type										❾ Stepper motor brand
			57 series stepper motor	CM Open loop CME Closed loop	23 26 31	MC Pulse type IO IO type EC IO typeEtherCAT RS RS485 ⚠ Default type: pulse type										S(Leadshine) No motor
			❹ Inertia	❺ Voltage(V)	❻ Output power											❾ Servo motor brand
			MH Servo motor	TA220 Single phase	200W											S(Leadshine) X(Panasonic) No motor

※ Recommend motor brand JSCC

Model code example	Conveyor Model	Belt Width	Conveyor Length	Output Power	Voltage	Control Method	Ratio	Belt Type	Motor Brand
Speed adjustable motor	BCQ01–	B150 –	L800 –	6 –	TA220 –	SCM –	12.5 –	H –	G
Model code example	Conveyor Model	Belt Width	Conveyor Length	Motor series	Control Method	Output torque	Drive type	Belt Type	Motor Brand
Stepper motor	BCQ51–	B150 –	L800 –	57 –	CM –	23 –	MC –	H –	S
Model code example	Conveyor Model	Belt Width	Conveyor Length	Inertia	Voltage	Output power	Drive type	Belt Type	Motor Brand
Servo motor	BCQ51–	B150 –	L800 –	MH –	TA220 –	200W –	EC –	H –	X

Recommend belt width and conveyor length							
Model	B	L120 ≀ 300	L305 ≀ 500	L505 ≀ 600	L605 ≀ 800		
BCQ01 BCQ51	60~80	●	●	●	●		
	85~120	—	●	●	●		
	125~150	—	●	●	●		

Conveyor Dimensions

Motor Specification: 57 series stepper motor ⟵ Motion Direction

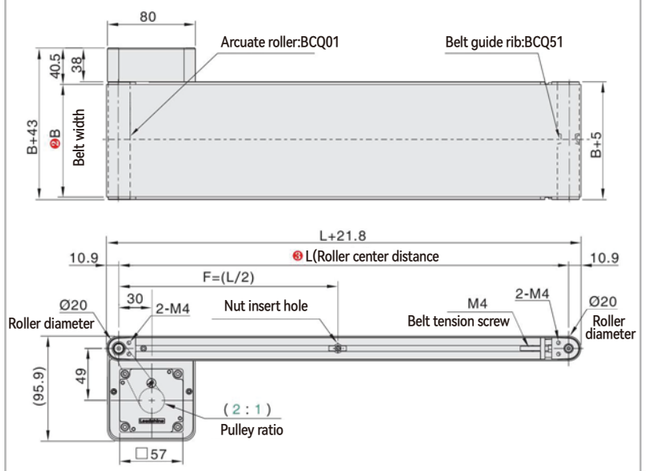

⚠ Above conveyor dimensions is basis on belt thickness H(0.9mm)
⚠ When L≤450, no counterbores at F position, there are 4 nuts inside aluminum profile slot.
When L>460, there is counterbores at F position.

Conveyor Profile Section

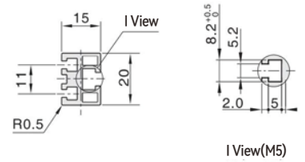

⚠ Nut specification inside aluminum profile slot:
Basis on L (Roller center distance)

120~500	501~800	—	Position	Spec	Status
4PCS	6PCS	—	I View	M5(square)	Accessories
—	—	—	—	—	—

Conveyor speed and load capability

Form 1: Gear box ratio and conveyor speed(m/min)

Gear box radio	Fix-speed motor Speed(m/min)	Speed adjustable motor Speed(m/min)	Frequency motor Speed(m/min)	Brushless motor Speed(m/min)
5	—	—	—	0~75.4
7.5	—	—	—	0~50.2
10	—	—	—	0~37.7
12.5	13.6	8.1~13.6	—	0~30.1
15	11.3	6.8~11.3	—	0~25.1
18	9.4	5.7~9.4	—	0~20.9
25	6.8	4.1~6.8	—	0~15.1
30	5.7	3.4~5.7	—	0~12.6
36	4.7	2.8~4.7	—	0~10.5
50	3.4	2.0~3.4	—	0~7.5
60	2.8	1.7 ~2.8	—	0~6.3

⚠ Test Condition:B=150 L=800

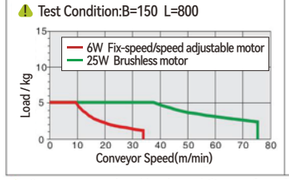

⚠ Speed calculation formula

1.Drive roller diameter D=20mm
2.Speed adjustable motor RPM=1350r/min
3.Frequency motor RPM=1680r/min
4.Brushless motor RPM=3000r/min
5.Belt pulley ratio i2=2:1

$$S=\frac{D\times\pi\times R\times i2}{i1\times1000}$$

$$S=\frac{20\times3.14\times1350\times2}{12.5\times1000}$$

S= 13.5648m/min

Form 2: Pulse quality and conveyor speed(m/min)

Pulse quantity	Conveyor speed(m/min)	57 series stepper motor torque 2.3N.m	2.6N.m	3.1N.m	—	—	—	—
400	15.1	0~6.4	0~7.2	0~8.7	—	—	—	—
800	30.1	0~3.2	0~3.6	0~4.3	—	—	—	—
1600	60.3	0~1.6	0~1.8	0~2.2	—	—	—	—
3200	120.6	0~0.8	0~0.9	0~1.1	—	—	—	—
6400	241.2	0~0.4	0~0.5	0~0.5	—	—	—	—
12800	482.3	—	—	—	—	—	—	—
25600	964.6	—	—	—	—	—	—	—
51200	1929.2	—	—	—	—	—	—	—

Instrument 1.Set the current as default 2.Set the code on motor drive
3.Default torque can be modified by current setting.

⚠ Test Condition:B=150 L=800 Current:5A

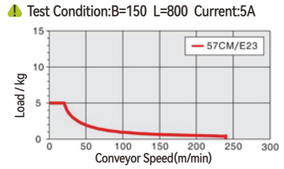

⚠ Speed calculation formula

1.Drive roller diameter D=20mm
2.Pulse quantity=400
3.Stepper motor angle J=1.8°
4.Brushless motor RPM=3000r/min
5.Belt pulley ratio i2=2:1

$$S=\frac{D\times\pi\times(M\times J/360\times60)\times i2}{1000}$$

$$S=\frac{20\times3.14\times(400\times1.8/360\times60)\times2}{1000}$$

S= 15.1m/min

⚠ Conveyor speed and load capability are for reference, the data is measured by testing under specific conditions.

Belt Specification

H	H6	B	D
• Material:PU • Thickness:0.9mm • Color:Blackish green • Character:General	• Material:PU • Thickness:0.9mm • Color:Bright green • Character:General	• Material:PU • Thickness:1.0mm • Color:Brown • Character:General	• Material:PU • Thickness:0.8mm • Color:Black • Character:ESD
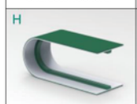	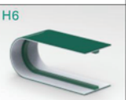	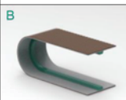	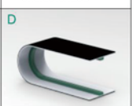
F	**U**	**M1**	**Q2**
• Material:PU • Thickness:1.2mm • Color:White • Character:Food grade	• Material: • Double sided gauze • Thickness:0.5mm • Color:Blackish green • Character:Accumulation	• Material:PU • Thickness:1.0mm • Color:Blue • Character:Oil resistance	• Material:PU • Thickness:1.0mm • Color:Green • Character: • Incline application
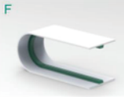		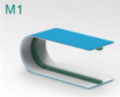	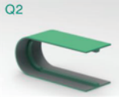

Customized conveyor support and parts guide profile

Product Application Case

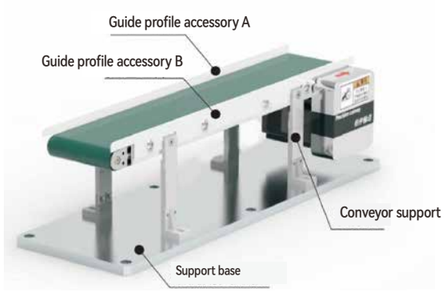

Single Slot Aluminum Profile



Conveyor Features

Adapt to limited space for small parts transferring

※ Please do not exceed the allowed conveyor load and length. Belt thickness should be smaller than 1.2mm due to belt roller diameter.

Series Code	Type	※ Conveyor Features		Material			Surface Treatment		
		Application Features	Motion Features	Aluminum Profile	Motor Cover	Pulley Mounting Board	Aluminum Profile	Motor Cover	Pulley Mounting Board
BCN01	Arcuate roller to avoid belt shift	Belt with good flatness	One-way transfer	Alloy			Surface electrophoresis	Painting	
BCN51	Belt guide rib to avoid belt shift	Belt runs stable, but guide rib may be slight protrusion.	Forward/Reverse transfer						

❶ Model: Series Code	❷ B-Belt Width	❸ L-Conveyor Length 5mm	Motor Options: ❹ Output Power(W)	❺ Voltage(V)	❻ Motor Type	❼ Gear box ratio	❽ Belt Spec	❾ Motor Brand
BCN01 Arcuate roller BCN51 Belt with guide rib	60~150 Min.Step (5:mm)	260~800	6	TA220 Single phase	IM Fix-speed motor SCM Speed adjustable motor	5 7.5 10 12.5 15 18 25 30 36 50 60 75 90 100 120 150 180 ⚠ When motor power is 6W gear box ratio can not be 5~10.	H(Blackish green) H6(Bright green) B(Brown) D(Black-ESD) F(White-Food grade) U(Blackish green-accumulation) M1(Blue- Blue-oil resistance) Q2(Green-incline application)	GPG JSCC No motor
			25	DC24 DC TA220 Single phase	KMC Speed adjustable motor SWS Motor with drive			ZD No motor
			❹ Motor Series	❺ Control method	❻ Output torque	❼ Drive type		❾ Stepper motor brand
			57 series stepper motor	CM Open loop CME Closed loop	23 26 31	MC Pulse type IO IO type EC IO typeEtherCAT RS RS485 ⚠ Default type: pulse type		S(Leadshine) No motor
			❹ Inertia	❺ Voltage(V)	❻ Output power			❾ Servo motor brand
			MH Servo motor	TA220 Single phase	200W			S(Leadshine) X(Panasonic) No motor

※ Recommend motor brand JSCC

Model code example	Conveyor Model	Belt Width	Conveyor Length	Output Power	Voltage	Control Method	Ratio	Belt Type	Motor Brand
Speed adjustable motor	BCN01	B150	L800	6	TA220	SCM	12.5	H	G
Model code example	Conveyor Model	Belt Width	Conveyor Length	Motor series	Control Method	Output torque	Drive type	Belt Type	Motor Brand
Stepper motor	BCN51	B150	L800	57	CM	23	MC	H	S
Model code example	Conveyor Model	Belt Width	Conveyor Length	Inertia	Voltage	Output power	Drive type	Belt Type	Motor Brand
Servo motor	BCN51	B150	L800	MH	TA220	200W	EC	H	X

Recommend belt width and conveyor length

Model	B	L260 ≀ 300	L305 ≀ 500	L505 ≀ 600	L605 ≀ 800
BCN01 BCN51	60~80	●	●	●	●
	85~120	—	●	●	●
	125~150	—	●	●	●

Conveyor Dimensions

Motor Specification: 6W ⟵ Motion Direction

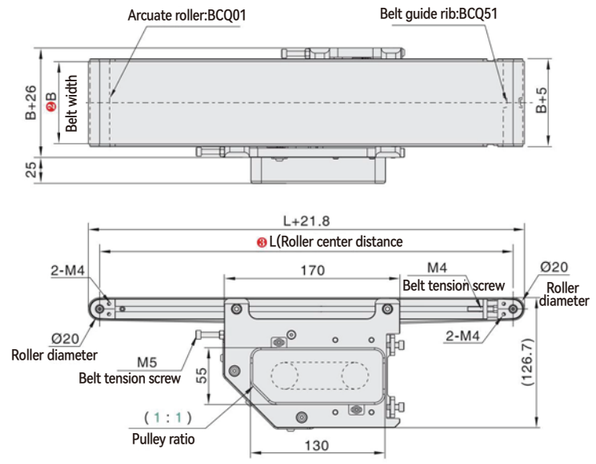

Conveyor Profile Section

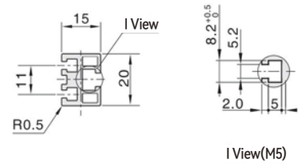

⚠ Nut specification inside aluminum profile slot: Basis on L (Roller center distance)

260~500	501~800	—	Position	Spec	Status
4PCS	6PCS	—	I View	M5(square)	Accessories
—	—	—	—	—	—

⚠ Above conveyor dimensions is basis on belt thickness H(0.9mm)

Conveyor speed and load capability

Form 1: Gear box ratio and conveyor speed(m/min)

Gear box radio	Fix-speed motor Speed(m/min)	Speed adjustable motor Speed(m/min)	Frequency motor Speed(m/min)	Brushless motor Speed(m/min)
5	—	—	—	0~75.4
7.5	—	—	—	0~50.2
10	—	—	—	0~37.7
12.5	13.6	8.1~13.6	—	0~30.1
15	11.3	6.8~11.3	—	0~25.1
18	9.4	5.7~9.4	—	0~20.9
25	6.8	4.1~6.8	—	0~15.1
30	5.7	3.4~5.7	—	0~12.6
36	4.7	2.8~4.7	—	0~10.5
50	3.4	2.0~3.4	—	0~7.5
60	2.8	1.7 ~2.8	—	0~6.3

Form 2: Pulse quality and conveyor speed(m/min)

Pulse quantity	Conveyor speed(m/min)	57 series stepper motor torque 2.3N.m	2.6N.m	3.1N.m	—	—	—	—
400	15.1	0~12.8	0~14.5	0~17.3	—	—	—	—
800	30.1	0~6.4	0~7.2	0~8.7	—	—	—	—
1600	60.3	0~3.2	0~3.6	0~4.3	—	—	—	—
3200	120.6	0~1.6	0~1.8	0~2.2	—	—	—	—
6400	241.2	0~0.8	0~0.9	0~1.1	—	—	—	—
12800	482.3	—	—	—	—	—	—	—
25600	964.6	—	—	—	—	—	—	—
51200	1929.2	—	—	—	—	—	—	—

Instrument 1.Set the current as default 2.Set the code on motor drive 3.Default torque can be modified by current setting.

⚠ Test Condition:B=150 L=800

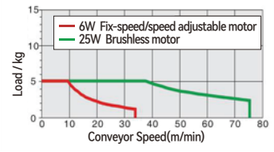

⚠ Speed calculation formula

1.Drive roller diameter D=40mm
2.Speed adjustable motor RPM=1350r/min
3.Frequency motor RPM=1680r/min
4.Brushless motor RPM=3000r/min
5.Belt pulley ratio i2=1:1

$$S=\frac{D\times\pi\times R\times i2}{i1\times1000}$$

$$S=\frac{40\times3.14\times1350\times1}{12.5\times1000}$$

S= 13.5648m/min

⚠ Test Condition:B=150 L=800 Current:5A

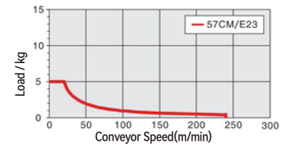

⚠ Speed calculation formula

1.Drive roller diameter D=40mm
2.Pulse quantity=400
3.Stepper motor angle J=1.8°
4.Belt pulley ratio i2=1:1

$$S=\frac{D\times\pi\times(M\times J/360\times60)\times i_2}{1000}$$

$$S=\frac{40\times3.14\times(400\times1.8/360\times60)\times1}{1000}$$

S=15.072m/min

⚠ Conveyor speed and load capability are for reference, the data is measured by testing under specific conditions.

Belt Specification

Underlying Parameter			
• Material:PU • Thickness:0.9mm • Color:Blackish green • Character:General	• Material:PU • Thickness:0.9mm • Color:Bright green • Character:General	• Material:PU • Thickness:1.0mm • Color:Brown • Character:General	• Material:PU • Thickness:0.8mm • Color:Black • Character:ESD
H	H6	B	D
Underlying Parameter			
• Material:PU • Thickness:1.2mm • Color:White • Character:Food grade	• Material: Double sided gauze • Thickness:0.5mm • Color:Blackish green • Character:Accumulation	• Material:PU • Thickness:1.0mm • Color:Blue • Character:Oil resistance	• Material:PU • Thickness:1.0mm • Color:Green • Character: • Incline application
F	U	M1	Q2

Customized conveyor support and parts guide profile

Product Application Case

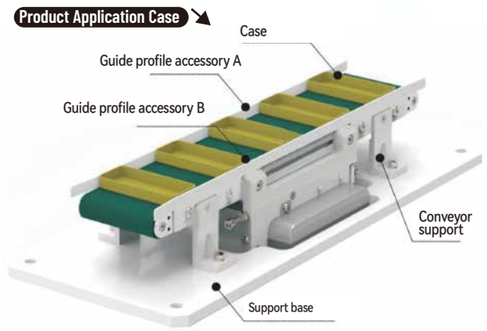

Dual Slots Aluminum Profile



Conveyor Features

Made of precision aluminum profile, short lead time

※ Please do not exceed the allowed conveyor load and length. Belt thickness should be smaller than 1.2mm due to belt roller diameter.

Series Code	Type	※ Conveyor Features		Material			Surface Treatment		
		Application Features	Motion Features	Aluminum Profile	Motor Cover	Pulley Mounting Board	Aluminum Profile	Motor Cover	Pulley Mounting Board
BQT01	Arcuate roller to avoid belt shift	Belt with good flatness	One-way transfer	Alloy			Surface electrophoresis	Painting	
BQT51	Belt guide rib to avoid belt shift	Belt runs stable, but guide rib may be slight protrusion.	Forward/Reverse transfer						

Model		❸L-Conveyor Length 5mm	Motor Options					
❶ Series Code	❷B-Belt Width		❹ Output Power(W)	❺ Voltage(V)	❻ Motor Type	❼ Gear box ratio	❽ Belt Spec	❾ Motor Brand
BQT01 Arcuate roller BQT51 Belt with guide rib	50 100 150 200 250	390~3000	6 25 40	TA220 Single phase SA220 Three phase	IM Fix-speed motor SCM Speed adjustable motor INV VFD type	5 7.5 10 12.5 15 18 25 30 36 50 60 75 90 100 120 150 180 ⚠ When motor power is 6W gear box ratio can not be 5~10.	H(Blackish green) H6(Bright green) D(Black-ESD) D9(Blackish green-ESD) F(White-Food grade) Q2(Green-incline application) Y2(Yellow- Special type) R(Red- Special type)	GPG JSCC No motor
			25 40	DC24 DC TA220 Single phase	KMC Speed adjustable motor SWS Motor with drive			ZD No motor
			❹ Motor Series	❺ Control method	❻ Output torque	❼ Drive type		❾ Stepper motor brand
			57 series stepper motor	CM Open loop	23 26 31	MC Pulse type IO IO type EC IO typeEtherCAT RS RS485 ⚠ Default type: pulse type		S(Leadshine) No motor
			86 series stepper motor	CME Closed loop	45 80			
			❹ Inertia	❺ Voltage(V)	❻ Output power			❾ Servo motor brand
			MH Servo motor	TA220 Single phase	200W 400W			S(Leadshine) X(Panasonic) No motor

※ Recommend motor brand JSCC

Model code example	Conveyor Model	Belt Width	Conveyor Length	Output Power	Voltage	Control Method	Ratio	Belt Type	Motor Brand
Speed adjustable motor	BQT01–	B150 –	L1000 –	25 –	TA220 –	SCM –	12.5 –	H –	G
Model code example	Conveyor Model	Belt Width	Conveyor Length	Motor series	Control Method	Output torque	Drive type	Belt Type	Motor Brand
Stepper motor	BQT51–	B150 –	L1000 –	57 –	CM –	23 –	MC –	H –	S
Model code example	Conveyor Model	Belt Width	Conveyor Length	Inertia	Voltage	Output power	Drive type	Belt Type	Motor Brand
Servo motor	BQT51–	B150 –	L1000 –	MH –	TA220 –	200W –	EC –	H –	X

Recommend belt width and conveyor length							
Model	B	L300 ≀ 400	L405 ≀ 500	L505 ≀ 600	L605 ≀ 700	L705 ≀ 800	L805 ≀ 3000
BQT01 BQT51	50	●	●	●	●	●	●
	100	●	●	●	●	●	●
	150	—	—	●	●	●	●
	200	—	—	—	●	●	●
	250	—	—	—	—	—	●

Conveyor Dimensions

Motor Specification: 6W ⟵ Motion Direction

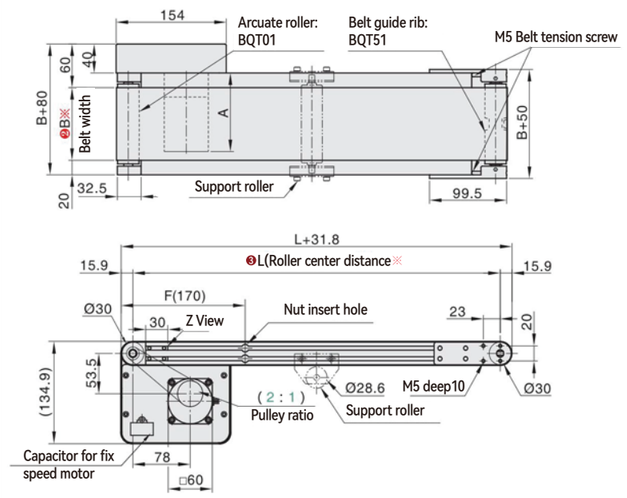

⚠ Above conveyor dimensions is basis on belt thickness H(0.9mm)

Conveyor Profile Section

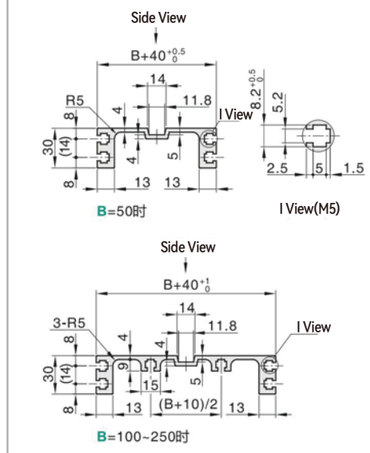

⚠ Nut specification inside aluminum profile slot: Basis on L (Roller center distance)

300~999	1000~1499	1500~	Position	Spec	Status
4PCS	6PCS	8PCS	I View	M5(square)	Accessories
—	—	—	—	—	—

Conveyor speed and load capability

Form 1: Gear box ratio and conveyor speed(m/min)

Gear box radio	Fix-speed motor Speed(m/min)	Speed adjustable motor Speed(m/min)	Frequency motor Speed(m/min)	Brushless motor Speed(m/min)
5	50.9	30.5~50.9	63.3	0~113.0
7.5	33.9	20.3~33.9	42.2	0~75.4
10	25.4	15.3~25.4	31.7	0~56.5
12.5	20.3	12.2~20.3	25.3	0~45.2
15	17.0	10.2~17.0	21.1	0~37.7
18	14.1	8.5~14.1	17.6	0~31.4
25	10.2	6.1~10.2	12.7	0~22.6
30	8.5	5.1~8.5	10.6	0~18.8
36	7.1	4.2~7.1	8.8	0~15.7
50	5.1	3.1~5.1	6.3	0~11.3
60	4.2	2.5~4.2	5.3	0~9.4

Form 2: Pulse quality and conveyor speed(m/min)

Pulse quantity	Conveyor speed(m/min)	57 series stepper motor torque 2.3N.m	2.6N.m	3.1N.m	86 series stepper motor torque 4.5N.m	8.0N.m	—	—
400	22.6	0~4.2	0~4.8	0~5.7	0~8.4	0~15.0	—	—
800	45.2	0~2.1	0~2.4	0~2.9	0~4.2	0~7.5	—	—
1600	90.4	0~1.0	0~1.2	0~1.4	0~2.1	0~3.7	—	—
3200	180.9	0~0.5	0~0.6	0~0.7	0~1.0	0~1.9	—	—
6400	361.7	0~0.3	0~0.3	0~0.4	0~0.5	0~0.9	—	—
12800	723.5	—	—	—	—	—	—	—
25600	1446.9	—	—	—	—	—	—	—
51200	2893.8	—	—	—	—	—	—	—

Instrument 1.Set the current as default 2.Set the code on motor drive
3.Default torque can be modified by current setting.

⚠ Test Condition:B=150 L=800

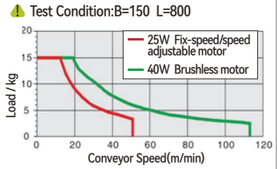

⚠ Speed calculation formula

1.Drive roller diameter D=30mm
2.Speed adjustable motor RPM=1350r/min
3.Frequency motor RPM=1680r/min
4.Brushless motor RPM=3000r/min
5.Belt pulley ratio i2=2:1

$S=\frac{D\times\pi\times R\times i2}{i1\times1000}$

$S=\frac{30\times3.14\times1350\times2}{12.5\times1000}$

S=20.3472m/min

⚠ Test Condition:B=150 L=1000 Current:5A

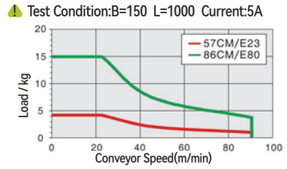

⚠ Speed calculation formula

1.Drive roller diameter D=30mm
2.Pulse quantity=400
3.Stepper motor angle J=1.8°
4.Belt pulley ratio i2=2:1

$S=\frac{D\times\pi\times(M\times J/360\times60)\times i_2}{1000}$

$S=\frac{30\times3.14\times(400\times1.8/360\times60)\times2}{1000}$

S=22.6m/min

⚠ Conveyor speed and load capability are for reference, the data is measured by testing under specific conditions.

Belt Specification

Underlying Parameter			
• Material:PU • Thickness:0.9mm • Color:Blackish green • Character:General	• Material:PU • Thickness:0.9mm • Color:Bright green • Character:General	• Material:PU • Thickness:0.8mm • Color:Black • Character:ESD	• Material:PU • Thickness:1.0mm • Color:Blackish green • Character:ESD
H	H6	D	D9
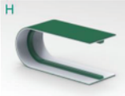	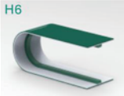	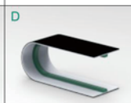	
Underlying Parameter			
• Material:PU • Thickness:1.2mm • Color:White • Character:Food grade	• Material:PU • Thickness:1mm • Color:Green • Character:Incline	• Material:Pvc • Thickness:1.2mm • Color:Yellow • Character:Special	• Material:Pvc • Thickness:1.2mm • Color:Red • Character:Special
F	Q2	Y2	R
	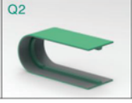		

Conveyor with C shape guide profile

Product Application Case

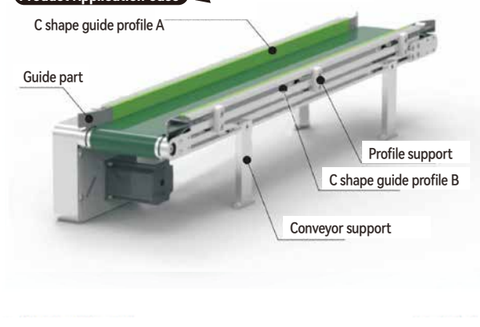

Dual Slots Aluminum Profile



Conveyor Features

Made of precision aluminum profile, short lead time

※ Please do not exceed the allowed conveyor load and length. Belt thickness should be smaller than 1.2mm due to belt roller diameter.

Series Code	Type	※ Conveyor Features		Material			Surface Treatment		
		Application Features	Motion Features	Aluminum Profile	Motor Cover	Pulley Mounting Board	Aluminum Profile	Motor Cover	Pulley Mounting Board
BQZ01	Arcuate roller to avoid belt shift	Belt with good flatness	One-way transfer	Alloy			Surface electrophoresis	Painting	
BQZ51	Belt guide rib to avoid belt shift	Belt runs stable, but guide rib may be slight protrusion.	Forward/Reverse transfer						

Model		❸L-Conveyor Length 5mm	Motor Options					❽ Belt Spec	❾ Motor Brand
❶ Series Code	❷B-Belt Width		❹ Output Power(W)	❺ Voltage(V)	❻ Motor Type	❼ Gear box ratio			
BQZ01 Arcuate roller BQZ51 Belt with guide rib	50 100 150 200 250	390~3000	6 25 40	TA220 Single phase SA220 Three phase	IM Fix-speed motor SCM Speed adjustable motor INV VFD type	5 7.5 10 12.5 15 18 25 30 36 50 60 75 90 100 120 150 180 ⚠ When motor power is 6W gear box ratio can not be 5~10.		H(Blackish green) H6(Bright green) D(Black-ESD) D9(Blackish green-ESD) F(White-Food grade) Q2(Green-incline application) Y2(Yellow- Special type) R(Red- Special type)	GPG JSCC No motor
			25 40	DC24 DC TA220 Single phase	KMC Speed adjustable motor SWS Motor with drive				ZD No motor
			❹ Motor Series	❺ Control method	❻ Output torque	❼ Drive type			❾ Stepper motor brand
			57 series stepper motor	CM Open loop CME Closed loop	23 26 31 45 80	MC Pulse type IO IO type EC IO typeEtherCAT RS RS485 ⚠ Default type: pulse type			S(Leadshine) No motor
			86 series stepper motor						❾ Servo motor brand
			❹ Inertia	❺ Voltage(V)	❻ Output power				S(Leadshine) X(Panasonic) No motor
			MH Servo motor	TA220 Single phase	200W 400W				

※ Recommend motor brand JSCC

Model code example	Conveyor Model	Belt Width	Conveyor Length	Output Power	Voltage	Control Method	Ratio	Belt Type	Motor Brand
Speed adjustable motor	BQZ01–	B150 –	L1000 –	25 –	TA220 –	SCM –	12.5 –	H –	G
Model code example	Conveyor Model	Belt Width	Conveyor Length	Motor series	Control Method	Output torque	Drive type	Belt Type	Motor Brand
Stepper motor	BQZ51–	B150 –	L1000 –	57 –	CM –	23 –	MC –	H –	S
Model code example	Conveyor Model	Belt Width	Conveyor Length	Inertia	Voltage	Output power	Drive type	Belt Type	Motor Brand
Servo motor	BQZ51–	B150 –	L1000 –	MH –	TA220 –	200W –	EC –	H –	X

Recommend belt width and conveyor length

Model	B	L390 ≀ 400	L405 ≀ 500	L505 ≀ 600	L605 ≀ 700	L705 ≀ 800	L805 ≀ 3000
BQZ01 BQZ51	50	●	●	●	●	●	●
	100	●	●	●	●	●	●
	150	—	—	●	●	●	●
	200	—	—	—	●	●	●
	250	—	—	—	—	—	●

Conveyor Dimensions

Motor Specification: 6W ⟵ Motion Direction

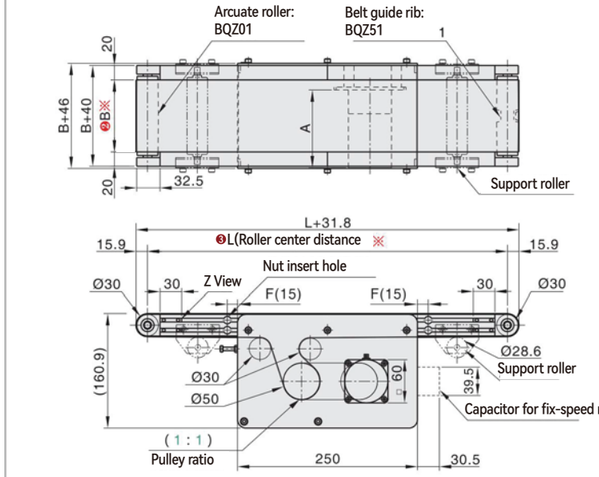

Conveyor Profile Section

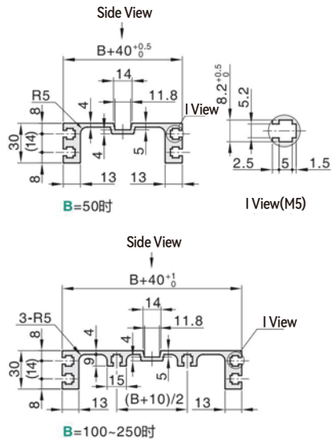

⚠ Nut specification inside aluminum profile slot: Basis on L (Roller center distance)

300~999	1000~1499	1500~	Position	Spec	Status
4PCS	6PCS	8PCS	I View	M5(square)	Accessories
–	–	–	–	–	–

⚠ Above conveyor dimensions is basis on belt thickness H(0.9mm)

Conveyor speed and load capability

Form 1: Gear box ratio and conveyor speed(m/min)

Gear box radio	Fix-speed motor Speed(m/min)	Speed adjustable motor Speed(m/min)	Frequency motor Speed(m/min)	Brushless motor Speed(m/min)
5	42.4	25.4~42.4	52.8	0~94.2
7.5	28.3	17.0~28.3	35.2	0~62.8
10	21.2	12.7~21.2	26.4	0~47.1
12.5	17.0	10.2~17.0	21.1	0~37.7
15	14.1	8.5~14.1	17.6	0~31.4
18	11.8	7.1~11.8	14.7	0~26.2
25	8.5	5.1~8.5	10.6	0~18.8
30	7.1	4.2~7.1	8.8	0~15.7
36	5.9	3.5~5.9	7.3	0~13.1
50	4.2	2.5~4.2	5.3	0~9.4
60	3.5	2.1~3.5	4.4	0~7.9

Form 2: Pulse quality and conveyor speed(m/min)

Pulse quantity	Conveyor speed(m/min)	57 series stepper motor torque 2.3N.m	2.6N.m	3.1N.m	86 series stepper motor torque 4.5N.m	8.0N.m	–	–
400	18.8	0~10.1	0~11.5	0~13.7	0~20.1	0~36.0	–	–
800	37.7	0~5.1	0~5.7	0~6.9	0~10.0	0~18.0	–	–
1600	75.4	0~2.5	0~2.9	0~3.4	0~5.0	0~9.0	–	–
3200	150.7	0~1.3	0~1.4	0~1.7	0~2.5	0~4.5	–	–
6400	301.4	0~0.6	0~0.7	0~0.9	0~1.3	0~2.2	–	–
12800	602.9	–	–	–	–	–	–	–
25600	1205.8	–	–	–	–	–	–	–
51200	2411.5	–	–	–	–	–	–	–

Instrument 1.Set the current as default 2.Set the code on motor drive 3.Default torque can be modified by current setting.

⚠ Test Condition:B=150 L=1000

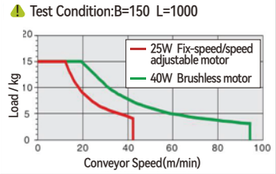

⚠ Speed calculation formula

1.Drive roller diameter D=50mm
2.Speed adjustable motor RPM=1350r/min
3.Frequency motor RPM=1680r/min
4.Brushless motor RPM=3000r/min
5.Belt pulley ratio i2=1:1

$S=\frac{D\times\pi\times R\times i2}{i1\times1000}$

$S=\frac{50\times3.14\times1350\times1}{12.5\times1000}$

S= 16.956m/min

⚠ Test Condition:B=150 L=1000 Current:5A

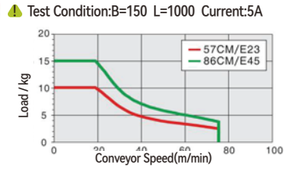

⚠ Speed calculation formula

1.Drive roller diameter D=50mm
2.Pulse quantity=400
3.Stepper motor angle J=1.8°
4.Belt pulley ratio i2=1:1

$S=\frac{D\times\pi\times(M\times J/360\times60)\times i_2}{1000}$

$S=\frac{50\times3.14\times(400\times1.8/360\times60)\times1}{1000}$

S= 18.84m/min

⚠ Conveyor speed and load capability are for reference, the data is measured by testing under specific conditions.

Belt Specification

Underlying Parameter			
• Material:PU • Thickness:0.9mm • Color:Blackish green • Character:General	• Material:PU • Thickness:0.9mm • Color:Bright green • Character:General	• Material:PU • Thickness:0.8mm • Color:Black • Character:ESD	• Material:PU • Thickness:1.0mm • Color:Blackish green • Character:ESD
H	H6	D	D9
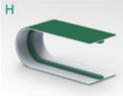			
Underlying Parameter			
• Material:PU • Thickness:1.2mm • Color:White • Character:Food grade	• Material:PU • Thickness:1mm • Color:Green • Character:Incline	• Material:Pvc • Thickness:1.2mm • Color:Yellow • Character:Special	• Material:Pvc • Thickness:1.2mm • Color:Red • Character:Special
F	Q2	Y2	R
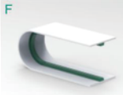			

Conveyor with customized guide profile and sensor

Product Application Case

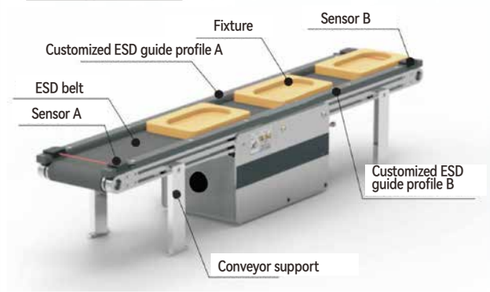

Dual Slots Aluminum Profile

Conveyor Features

Adapt to specified conveyor width and length with small load



※ Please do not exceed the allowed conveyor load and length. Belt thickness should be smaller than 1.2mm due to belt roller diameter.

Series Code	Type	※ Conveyor Features		Material			Surface Treatment		
		Application Features	Motion Features	Aluminum Profile	Motor Cover	Pulley Mounting Board	Aluminum Profile	Motor Cover	Pulley Mounting Board
BET01	Arcuate roller to avoid belt shift	Belt with good flatness	One-way transfer	Alloy			Surface electrophoresis	Painting	
BET51	Belt guide rib to avoid belt shift	Belt runs stable, but guide rib may be slight protrusion.	Forward/Reverse transfer						

Model		❸L-Conveyor Length 5mm	Motor Options				❽ Belt Spec	❾ Motor Brand
❶ Series Code	❷B-Belt Width		❹ Output Power(W)	❺ Voltage(V)	❻ Motor Type	❼ Gear box ratio		
BET01 Arcuate roller BET51 Belt with guide rib	50~300 Min.Step (5:mm)	190~2000	6 25 40	TA220 Single phase SA220 Three phase	IM Fix-speed motor SCM Speed adjustable motor INV VFD type	5 7.5 10 12.5 15 18 25 30 36 50 60 75 90 100 120 150 180 ⚠ When motor power is 6W gear box ratio can not be 5~10.	H(Blackish green) H6(Bright green) D(Black-ESD) D9(Blackish green-ESD) F(White-Food grade) Q2(Green-incline application) Y2(Yellow- Special type) R(Red- Special type)	GPG JSCC No motor
			25 40	DC24 DC TA220 Single phase	KMC Speed adjustable motor SWS Motor with drive			ZD No motor
			❹ Motor Series	❺ Control method	❻ Output torque	❼ Drive type		❾ Stepper motor brand
			57 series stepper motor	CM Open loop	23 26 31	MC Pulse type IO IO type EC IO typeEtherCAT RS RS485 ⚠ Default type: pulse type		S(Leadshine) No motor
			86 series stepper motor	CME Closed loop	45 80			❾ Servo motor brand
			❹ Inertia	❺ Voltage(V)	❻ Output power			S(Leadshine) X(Panasonic) No motor
			MH Servo motor	TA220 Single phase	200W 400W			

※ Recommend motor brand JSCC

Model code example	Conveyor Model	Belt Width	Conveyor Length	Output Power	Voltage	Control Method	Ratio	Belt Type	Motor Brand
Speed adjustable motor	BET01–	B150 –	L1000 –	25 –	TA220 –	SCM –	12.5 –	H –	G
Model code example	Conveyor Model	Belt Width	Conveyor Length	Motor series	Control Method	Output torque	Drive type	Belt Type	Motor Brand
Stepper motor	BET51–	B150 –	L1000 –	57 –	CM –	23 –	MC –	H –	S
Model code example	Conveyor Model	Belt Width	Conveyor Length	Inertia	Voltage	Output power	Drive type	Belt Type	Motor Brand
Servo motor	BET51–	B150 –	L1000 –	MH –	TA220 –	200W –	EC –	H –	X

Recommend belt width and conveyor length							
Model	B	L190 ≀ 300	L305 ≀ 500	L505 ≀ 600	L605 ≀ 800	L805 ≀ 900	L905 ≀ 2000
BET01 BET51	50~60	●	●	●	●	●	●
	65~110	—	●	●	●	●	●
	115~160	—	—	●	●	●	●
	165~210	—	—	—	●	●	●
	215~300	—	—	—	—	—	●

Conveyor Dimensions

Motor Specification : 6W ⟵ Motion Direction

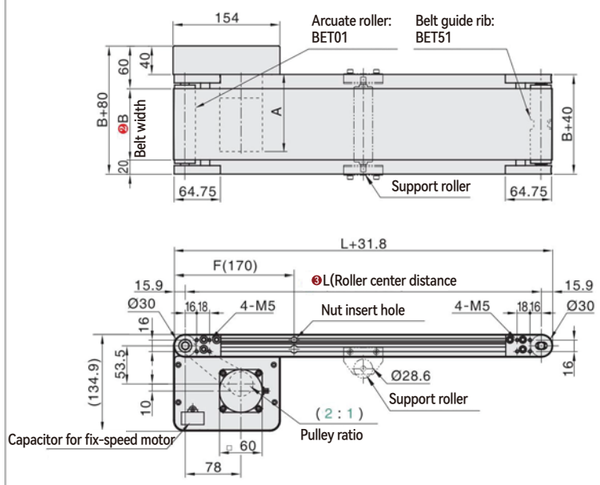

⚠ Above conveyor dimensions is basis on belt thickness H(0.9mm)

Conveyor Profile Section

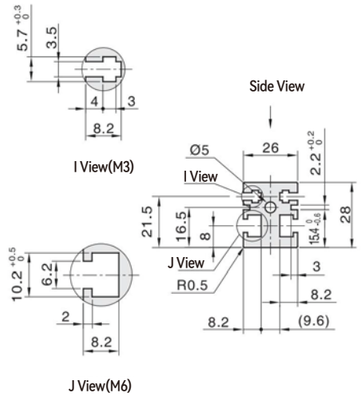

⚠ Nut specification inside aluminum profile slot:
Basis on L (Roller center distance)

190~999	1000~1499	1500~	Position	Spec	Status
4PCS	6PCS	8PCS	I View	M3 (hexagonal)	Accessories
4PCS	6PCS	8PCS	J View	M6(square)	Accessories

Conveyor speed and load capability

Form 1: Gear box ratio and conveyor speed(m/min)

Gear box radio	Fix-speed motor Speed(m/min)	Speed adjustable motor Speed(m/min)	Frequency motor Speed(m/min)	Brushless motor Speed(m/min)
5	50.9	30.5~50.9	63.3	0~113.0
7.5	33.9	20.3~33.9	42.2	0~75.4
10	25.4	15.3~25.4	31.7	0~56.5
12.5	20.3	12.2~20.3	25.3	0~45.2
15	17.0	10.2~17.0	21.1	0~37.7
18	14.1	8.5~14.1	17.6	0~31.4
25	10.2	6.1~10.2	12.7	0~22.6
30	8.5	5.1~8.5	10.6	0~18.8
36	7.1	4.2~7.1	8.8	0~15.7
50	5.1	3.1~5.1	6.3	0~11.3
60	4.2	2.5~4.2	5.3	0~9.4

⚠ Test Condition:B=150 L=1000

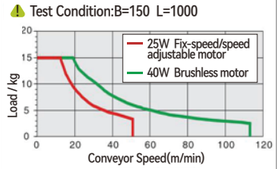

⚠ Speed calculation formula

1.Drive roller diameter D=30mm
2.Speed adjustable motor RPM=1350r/min
3.Frequency motor RPM=1680r/min
4.Brushless motor RPM=3000r/min
5.Belt pulley ratio i2=2:1

$S=\frac{D\times\pi\times R\times i2}{i1\times1000}$

$S=\frac{30\times3.14\times1350\times2}{12.5\times1000}$

S= 20.3472m/min

Form 2: Pulse quality and conveyor speed(m/min)

Pulse quantity	Conveyor speed(m/min)	57 series stepper motor torque 2.3N.m	2.6N.m	3.1N.m	86 series stepper motor torque 4.5N.m	8.0N.m	—	—
400	22.6	0~4.2	0~4.8	0~5.7	0~8.4	0~15.0	—	—
800	45.2	0~2.1	0~2.4	0~2.9	0~4.2	0~7.5	—	—
1600	90.4	0~1.0	0~1.2	0~1.4	0~2.1	0~3.7	—	—
3200	180.9	0~0.5	0~0.6	0~0.7	0~1.0	0~1.9	—	—
6400	361.7	0~0.3	0~0.3	0~0.4	0~0.5	0~0.9	—	—
12800	723.5	—	—	—	—	—	—	—
25600	1446.9	—	—	—	—	—	—	—
51200	2893.8	—	—	—	—	—	—	—

Instrument 1.Set the current as default 2.Set the code on motor drive
3.Default torque can be modified by current setting.

⚠ Test Condition:B=150 L=1000 Current:5A

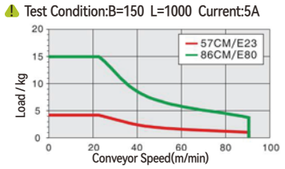

⚠ Speed calculation formula

1.Drive roller diameter D=30mm
2.Pulse quantity=400
3.Stepper motor angle J=1.8°
4.Belt pulley ratio i2=2:1

$S=\frac{D\times\pi\times(M\times J/360\times60)\times i_2}{1000}$

$S=\frac{30\times3.14\times(400\times1.8/360\times60)\times2}{1000}$

S=22.6m/min

⚠ Conveyor speed and load capability are for reference, the data is measured by testing under specific conditions.

Belt Specification

Underlying Parameter			
• Material:PU • Thickness:0.9mm • Color:Blackish green • Character:General	• Material:PU • Thickness:0.9mm • Color:Bright green • Character:General	• Material:PU • Thickness:0.8mm • Color:Black • Character:ESD	• Material:PU • Thickness:1.0mm • Color:Blackish green • Character:ESD
H	H6	D	D9
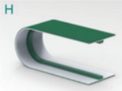	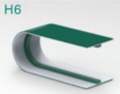	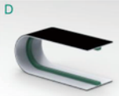	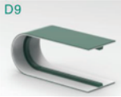
Underlying Parameter			
• Material:PU • Thickness:1.2mm • Color:White • Character:Food grade	• Material:PU • Thickness:1mm • Color:Green • Character:Incline	• Material:Pvc • Thickness:1.2mm • Color:Yellow • Character:Special	• Material:Pvc • Thickness:1.2mm • Color:Red • Character:Special
F	Q2	Y2	R
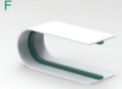		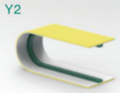	

Output Conveyor for part accumulation

Product Application Case

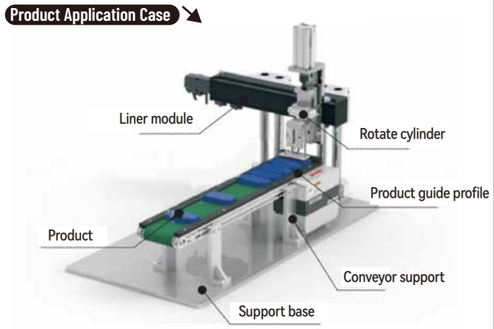

Dual Slots Aluminum Profile

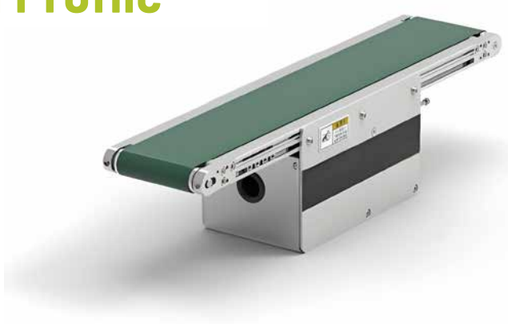

Conveyor Features

Adapt to specified conveyor width and length with small load

※ Please do not exceed the allowed conveyor load and length. Belt thickness should be smaller than 1.2mm due to belt roller diameter.

Series Code	Type	※ Conveyor Features		Material			Surface Treatment		
		Application Features	Motion Features	Aluminum Profile	Motor Cover	Pulley Mounting Board	Aluminum Profile	Motor Cover	Pulley Mounting Board
BEZ01	Arcuate roller to avoid belt shift	Belt with good flatness	One-way transfer	Alloy			Surface electrophoresis	Painting	
BEZ51	Belt guide rib to avoid belt shift	Belt runs stable, but guide rib may be slight protrusion.	Forward/Reverse transfer						

Model		❸L-Conveyor Length 5mm	Motor Options				❽ Belt Spec	❾ Motor Brand
❶ Series Code	❷B-Belt Width		❹ Output Power(W)	❺ Voltage(V)	❻ Motor Type	❼ Gear box ratio		
BEZ01 Arcuate roller BEZ51 Belt with guide rib	50~300 Min.Step (5:mm)	355~2000	6 25 40	TA220 Single phase SA220 Three phase	IM Fix-speed motor SCM Speed adjustable motor INV VFD type	5 7.5 10 12.5 15 18 25 30 36 50 60 75 90 100 120 150 180 ⚠ When motor power is 6W gear box ratio can not be 5~10.	H(Blackish green) H6(Bright green) D(Black-ESD) D9(Blackish green-ESD) F(White-Food grade) Q2(Green-incline application) Y2(Yellow- Special type) R(Red- Special type)	GPG JSCC No motor
			25 40	DC24 DC TA220 Single phase	KMC Speed adjustable motor SWS Motor with drive			ZD No motor
			❹ Motor Series	❺ Control method	❻ Output torque	❼ Drive type		❾ Stepper motor brand
			57 series stepper motor 86 series stepper motor	CM Open loop CME Closed loop	23 26 31 45 80	MC Pulse type IO IO type EC IO typeEtherCAT RS RS485 ⚠ Default type: pulse type		S(Leadshine) No motor
			❹ Inertia	❺ Voltage(V)	❻ Output power			❾ Servo motor brand
			MH Servo motor	TA220 Single phase	200W 400W			S(Leadshine) X(Panasonic) No motor

※ Recommend motor brand JSCC

Model code example	Conveyor Model	Belt Width	Conveyor Length	Output Power	Voltage	Control Method	Ratio	Belt Type	Motor Brand
Speed adjustable motor	BEZ01–	B150 –	L1000 –	25 –	TA220 –	SCM –	12.5 –	H –	G
Model code example	Conveyor Model	Belt Width	Conveyor Length	Motor series	Control Method	Output torque	Drive type	Belt Type	Motor Brand
Stepper motor	BEZ51–	B150 –	L1000 –	57 –	CM –	23 –	MC –	H –	S
Model code example	Conveyor Model	Belt Width	Conveyor Length	Inertia	Voltage	Output power	Drive type	Belt Type	Motor Brand
Servo motor	BEZ51–	B150 –	L1000 –	MH –	TA220 –	200W –	EC –	H –	X

Recommend belt width and conveyor length

Model	B	L355 ≀ 400	L405 ≀ 500	L505 ≀ 600	L605 ≀ 800	L805 ≀ 900	L905 ≀ 2000
BEZ01 BEZ51	50~60	●	●	●	●	●	●
	65~110	●	●	●	●	●	●
	115~160	—	—	●	●	●	●
	165~210	—	—	—	●	●	●
	215~300	—	—	—	—	—	●

Conveyor Dimensions

Motor Specification : 6W ⟵ Motion Direction

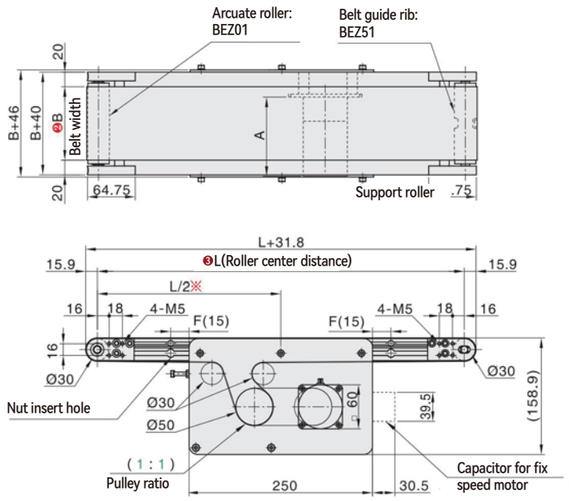

⚠ Above conveyor dimensions is basis on belt thickness H(0.9mm)

Conveyor Profile Section

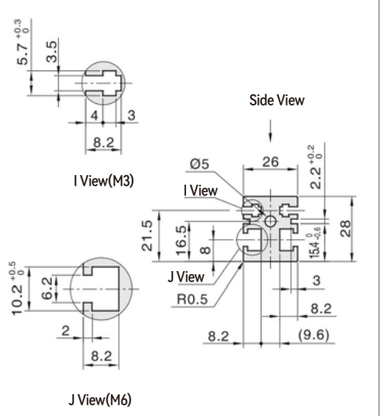

⚠ Nut specification inside aluminum profile slot:
Basis on L (Roller center distance)

355~999	1000~1499	1500~	Position	Spec	Status
4PCS	6PCS	8PCS	I View	M3 (hexagonal)	Accessories
4PCS	6PCS	8PCS	J View	M6(square)	Accessories

Conveyor speed and load capability

Form 1: Gear box ratio and conveyor speed(m/min)

Gear box radio	Fix-speed motor Speed(m/min)	Speed adjustable motor Speed(m/min)	Frequency motor Speed(m/min)	Brushless motor Speed(m/min)
5	42.4	25.4~42.4	52.8	0~94.2
7.5	28.3	17.0~28.3	35.2	0~62.8
10	21.2	12.7~21.2	26.4	0~47.1
12.5	17.0	10.2~17.0	21.1	0~37.7
15	14.1	8.5~14.1	17.6	0~31.4
18	11.8	7.1~11.8	14.7	0~26.2
25	8.5	5.1~8.5	10.6	0~18.8
30	7.1	4.2~7.1	8.8	0~15.7
36	5.9	3.5~5.9	7.3	0~13.1
50	4.2	2.5~4.2	5.3	0~9.4
60	3.5	2.1~3.5	4.4	0~7.9

⚠ Test Condition:B=150 L=1000

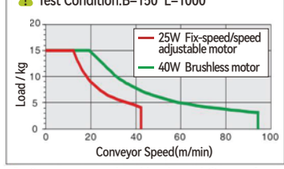

⚠ Speed calculation formula

1.Drive roller diameter D=50mm
2.Speed adjustable motor RPM=1350r/min
3.Frequency motor RPM=1680r/min
4.Brushless motor RPM=3000r/min
5.Belt pulley ratio i2=1:1

$$S=\frac{D\times\pi\times R\times i2}{i1\times 1000}$$

$$S=\frac{50\times 3.14\times 1350\times 1}{12.5\times 1000}$$

S= 16.956m/min

Form 2: Pulse quality and conveyor speed(m/min)

Pulse quantity	Conveyor speed(m/min)	57 series stepper motor torque 2.3N.m	2.6N.m	3.1N.m	86 series stepper motor torque 4.5N.m	8.0N.m	—	—
400	18.8	0~10.1	0~11.5	0~13.7	0~20.1	0~36.0	—	—
800	37.7	0~5.1	0~5.7	0~6.9	0~10.0	0~18.0	—	—
1600	75.4	0~2.5	0~2.9	0~3.4	0~5.0	0~9.0	—	—
3200	150.7	0~1.3	0~1.4	0~1.7	0~2.5	0~4.5	—	—
6400	301.4	0~0.6	0~0.7	0~0.9	0~1.3	0~2.2	—	—
12800	602.9	—	—	—	—	—	—	—
25600	1205.8	—	—	—	—	—	—	—
51200	2411.5	—	—	—	—	—	—	—

Instrument 1.Set the current as default 2.Set the code on motor drive
3.Default torque can be modified by current setting.

⚠ Test Condition:B=150 L=1000 Current:5A

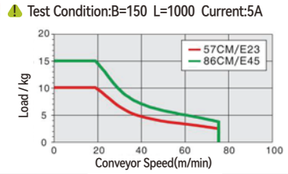

⚠ Speed calculation formula

1.Drive roller diameter D=50mm
2.Pulse quantity=400
3.Stepper motor angle J=1.8°
4.Belt pulley ratio i2=1:1

$$S=\frac{D\times\pi\times(M\times J/360\times 60)\times i_2}{1000}$$

$$S=\frac{50\times 3.14\times(400\times 1.8/360\times 60)\times 1}{1000}$$

S= 18.84m/min

⚠ Conveyor speed and load capability are for reference, the data is measured by testing under specific conditions.

Belt Specification

Underlying Parameter			
• Material:PU • Thickness:0.9mm • Color:Blackish green • Character:General	• Material:PU • Thickness:0.9mm • Color:Bright green • Character:General	• Material:PU • Thickness:0.8mm • Color:Black • Character:ESD	• Material:PU • Thickness:1.0mm • Color:Blackish green • Character:ESD
H	H6	D	D9
Underlying Parameter			
• Material:PU • Thickness:1.2mm • Color:White • Character:Food grade	• Material:PU • Thickness:1mm • Color:Green • Character:Incline	•Material:Pvc •Thickness:1.2mm •Color:Yellow •Character:Special	•Material:Pvc •Thickness:1.2mm •Color:Red •Character:Special
F	Q2	Y2	R

Conveyor with sorting mechanism

Product Application Case

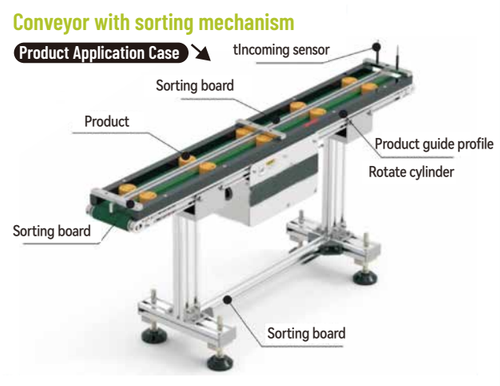

Dual Slots Aluminum Profile



Conveyor Features

Adapt to specified conveyor width and length with small load

Conveyor Dimensions

Motor Specification: 25W ← Motion Direction

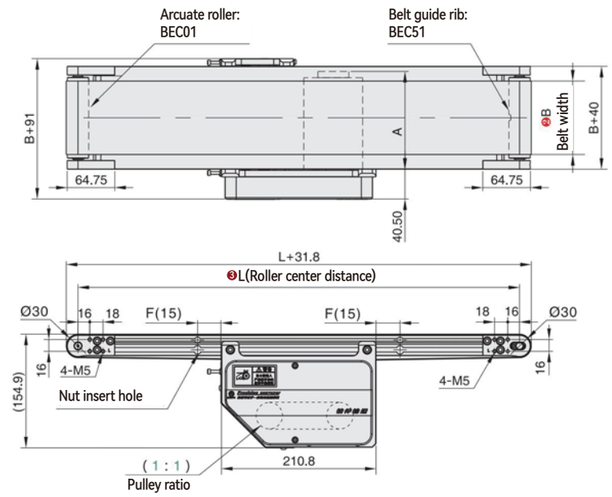

⚠ Above conveyor dimensions is basis on belt thickness H(0.9mm)

Conveyor Profile Section

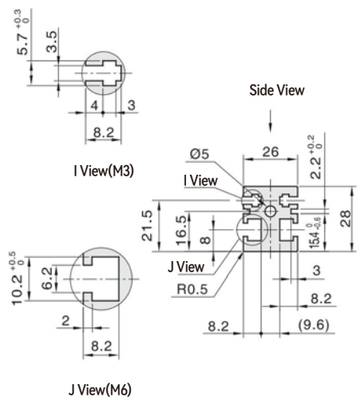

⚠ Nut specification inside aluminum profile slot:
Basis on L (Roller center distance)

355~999	1000~1499	1500~	Position	Spec	Status
4PCS	6PCS	8PCS	I View	M3 (hexagonal)	Accessories
4PCS	6PCS	8PCS	J View	M6(square)	Accessories

Conveyor speed and load capability

Form 1: Gear box ratio and conveyor speed(m/min)

Gear box radio	Fix-speed motor Speed(m/min)	Speed adjustable motor Speed(m/min)	Frequency motor Speed(m/min)	Brushless motor Speed(m/min)
5	42.4	25.4~42.4	52.8	0~94.2
7.5	28.3	17.0~28.3	35.2	0~62.8
10	21.2	12.7~21.2	26.4	0~47.1
12.5	17.0	10.2~17.0	21.1	0~37.7
15	14.1	8.5~14.1	17.6	0~31.4
18	11.8	7.1~11.8	14.7	0~26.2
25	8.5	5.1~8.5	10.6	0~18.8
30	7.1	4.2~7.1	8.8	0~15.7
36	5.9	3.5~5.9	7.3	0~13.1
50	4.2	2.5~4.2	5.3	0~9.4
60	3.5	2.1~3.5	4.4	0~7.9

Form 2: Pulse quality and conveyor speed(m/min)

Pulse quantity	Conveyor speed(m/min)	57 series stepper motor torque 2.3N.m	2.6N.m	3.1N.m	86 series stepper motor torque 4.5N.m	8.0N.m	—	—
400	18.8	0~10.1	0~11.5	0~13.7	0~20.1	0~36.0	—	—
800	37.7	0~5.1	0~5.7	0~6.9	0~10.0	0~18.0	—	—
1600	75.4	0~2.5	0~2.9	0~3.4	0~5.0	0~9.0	—	—
3200	150.7	0~1.3	0~1.4	0~1.7	0~2.5	0~4.5	—	—
6400	301.4	0~0.6	0~0.7	0~0.9	0~1.3	0~2.2	—	—
12800	602.9	—	—	—	—	—	—	—
25600	1205.8	—	—	—	—	—	—	—
51200	2411.5	—	—	—	—	—	—	—

Instrument 1.Set the current as default 2.Set the code on motor drive
3.Default torque can be modified by current setting.

⚠ Test Condition:B=150 L=1000

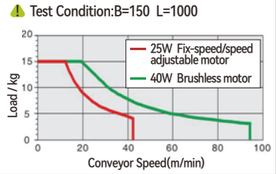

⚠ Speed calculation formula

1.Drive roller diameter D=50mm
2.Speed adjustable motor RPM=1350r/min
3.Frequency motor RPM=1680r/min
4.Brushless motor RPM=3000r/min
5.Belt pulley ratio i2=1:1

$$S=\frac{D\times\pi\times R\times i2}{i1\times1000}$$

$$S=\frac{50\times3.14\times1350\times1}{12.5\times1000}$$

S= 16.956m/min

⚠ Test Condition:B=150 L=1000 Current:5A

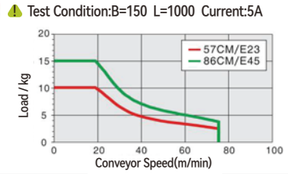

⚠ Speed calculation formula

1.Drive roller diameter D=50mm
2.Pulse quantity=400
3.Stepper motor angle J=1.8°
4.Belt pulley ratio i2=1:1

$$S=\frac{D\times\pi\times(M\times J/360\times60)\times i_2}{1000}$$

$$S=\frac{50\times3.14\times(400\times1.8/360\times60)\times1}{1000}$$

S= 18.84m/min

⚠ Conveyor speed and load capability are for reference, the data is measured by testing under specific conditions.

※ Please do not exceed the allowed conveyor load and length. Belt thickness should be smaller than 1.2mm due to belt roller diameter.

Series Code	Type	※ Conveyor Features: Application Features	Motion Features	Material: Aluminum Profile	Motor Cover	Pulley Mounting Board	Surface Treatment: Aluminum Profile	Motor Cover	Pulley Mounting Board
BEC01	Arcuate roller to avoid belt shift	Belt with good flatness	One-way transfer	Alloy			Surface electrophoresis	Painting	
BEC51	Belt guide rib to avoid belt shift	Belt runs stable, but guide rib may be slight protrusion.	Forward/Reverse transfer						

Model: ❶ Series Code	❷B-Belt Width	❸L-Conveyor Length 5mm	Motor Options: ❹ Output Power(W)	❺ Voltage(V)	❻ Motor Type	❼ Gear box ratio	❽ Belt Spec	❾ Motor Brand
BEC01 Arcuate roller BEC51 Belt with guide rib	60~300 Min.Step (5:mm)	355~2000	6 25 40	TA220 Single phase SA220 Three phase	IM Fix-speed motor SCM Speed adjustable motor INV VFD type	5 7.5 10 12.5 15 18 25 30 36 50 60 75 90 100 120 150 180 ⚠ When motor power is 6W gear box ratio can not be 5~10.	H(Blackish green) H6(Bright green) D(Black-ESD) D9(Blackish green-ESD) F(White-Food grade) Q2(Green-incline application) Y2(Yellow- Special type) R(Red- Special type)	GPG JSCC No motor
			25 40	DC24 DC TA220 Single phase	KMC Speed adjustable motor SWS Motor with drive			ZD No motor
			❹ Motor Series	❺ Control method	❻ Output torque	❼ Drive type		❾ Stepper motor brand
			57 series stepper motor	CM Open loop CME Closed loop	23 26 31 45 80	MC Pulse type IO IO type EC IO typeEtherCAT RS RS485 ⚠ Default type: pulse type		S(Leadshine) No motor
			86 series stepper motor					❾ Servo motor brand
			❹ Inertia	❺ Voltage(V)	❻ Output power			S(Leadshine) X(Panasonic) No motor
			MH Servo motor	TA220 Single phase	200W 400W			

※ Recommend motor brand JSCC

Model code example	Conveyor Model	Belt Width	Conveyor Length	Output Power	Voltage	Control Method	Ratio	Belt Type	Motor Brand
Speed adjustable motor	BEC01–	B150 –	L1000 –	25 –	TA220 –	SCM –	12.5 –	H –	G
Model code example	Conveyor Model	Belt Width	Conveyor Length	Motor series	Control Method	Output torque	Drive type	Belt Type	Motor Brand
Stepper motor	BEC51–	B150 –	L1000 –	57 –	CM –	23 –	MC –	H –	S
Model code example	Conveyor Model	Belt Width	Conveyor Length	Inertia	Voltage	Output power	Drive type	Belt Type	Motor Brand
Servo motor	BEC51–	B150 –	L1000 –	MH –	TA220 –	200W –	EC –	H –	X

Recommend belt width and conveyor length

Model	B	L355~400	L405~500	L505~600	L605~800	L805~900	L905~2000
BEC01 BEC51	60~70	●	●	●	●	●	●
	75~110	●	●	●	●	●	●
	115~160	—	—	●	●	●	●
	165~210	—	—	—	●	●	●
	215~300	—	—	—	—	—	●

Belt Specification

Underlying Parameter			
• Material:PU • Thickness:0.9mm • Color:Blackish green • Character:General	• Material:PU • Thickness:0.9mm • Color:Bright green • Character:General	• Material:PU • Thickness:0.8mm • Color:Black • Character:ESD	• Material:PU • Thickness:1.0mm • Color:Blackish green • Character:ESD
H	H6	D	D9
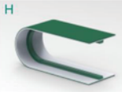			
Underlying Parameter			
• Material:PU • Thickness:1.2mm • Color:White • Character:Food grade	• Material:PU • Thickness:1mm • Color:Green • Character:Incline	• Material:Pvc • Thickness:1.2mm • Color:Yellow • Character:Special	• Material:Pvc • Thickness:1.2mm • Color:Red • Character:Special
F	Q2	Y2	R
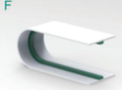			

Conveyor with rotary mechanism to change product direction

Product Application Case

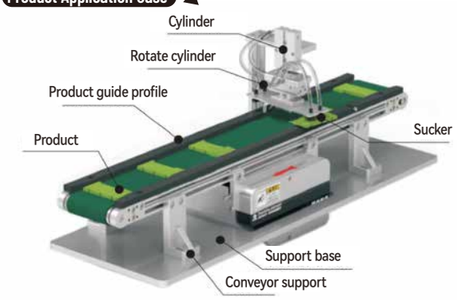

Dual Slots Aluminum Profile

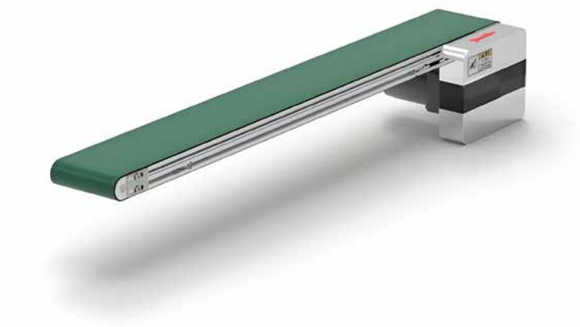

Conveyor Features

Adapt to specified conveyor width and length with small load

※ Please do not exceed the allowed conveyor load and length. Belt thickness should be smaller than 1.2mm due to belt roller diameter.

Series Code	Type	※ Conveyor Features		Material			Surface Treatment		
		Application Features	Motion Features	Aluminum Profile	Motor Cover	Pulley Mounting Board	Aluminum Profile	Motor Cover	Pulley Mounting Board
BEQ01	Arcuate roller to avoid belt shift	Belt with good flatness	One-way transfer	Alloy			Surface electrophoresis	Painting	
BEQ51	Belt guide rib to avoid belt shift	Belt runs stable, but guide rib may be slight protrusion.	Forward/Reverse transfer						

Model		❸L-Conveyor Length 5mm	Motor Options				❽ Belt Spec	❾ Motor Brand
❶ Series Code	❷B-Belt Width		❹ Output Power(W)	❺ Voltage(V)	❻ Motor Type	❼ Gear box ratio		
BEQ01 Arcuate roller BEQ51 Belt with guide rib	70~300 Min.Step (5:mm)	190~2000	6 25 40	TA220 Single phase SA220 Three phase	IM Fix-speed motor SCM Speed adjustable motor INV VFD type	5 7.5 10 12.5 15 18 25 30 36 50 60 75 90 100 120 150 180 ⚠ When motor power is 6W gear box ratio can not be 5~10.	H(Blackish green) H6(Bright green) D(Black-ESD) D9(Blackish green-ESD) F(White-Food grade) Q2(Green-incline application) Y2(Yellow- Special type) R(Red- Special type)	GPG JSCC No motor
			25 40	DC24 DC TA220 Single phase	KMC Speed adjustable motor SWS Motor with drive			ZD No motor
			❹ Motor Series	❺ Control method	❻ Output torque	❼ Drive type		❾ Stepper motor brand
			57 series stepper motor	CM Open loop CME Closed loop	23 26 31 45 80	MC Pulse type IO IO type EC IO typeEtherCAT RS RS485 ⚠ Default type: pulse type		S(Leadshine) No motor
			86 series stepper motor					❾ Servo motor brand
			❹ Inertia	❺ Voltage(V)	❻ Output power			S(Leadshine) X(Panasonic) No motor
			MH Servo motor	TA220 Single phase	200W 400W			

※ Recommend motor brand JSCC

Model code example	Conveyor Model	Belt Width	Conveyor Length	Output Power	Voltage	Control Method	Ratio	Belt Type	Motor Brand
Speed adjustable motor	BEQ01–	B150 –	L1000 –	25 –	TA220 –	SCM –	12.5 –	H –	G
Model code example	Conveyor Model	Belt Width	Conveyor Length	Motor series	Control Method	Output torque	Drive type	Belt Type	Motor Brand
Stepper motor	BEQ51–	B150 –	L1000 –	57 –	CM –	23 –	MC –	H –	S
Model code example	Conveyor Model	Belt Width	Conveyor Length	Inertia	Voltage	Output power	Drive type	Belt Type	Motor Brand
Servo motor	BEQ51–	B150 –	L1000 –	MH –	TA220 –	200W –	EC –	H –	X

Recommend belt width and conveyor length							
Model	B	L190 ≀ 300	L305 ≀ 500	L505 ≀ 600	L605 ≀ 800	L805 ≀ 900	L905 ≀ 2000
BEQ01 BEQ51	70~110	●	●	●	●	●	●
	115~160	●	●	●	●	●	●
	165~210	—	—	●	●	●	●
	215~260	—	—	—	●	●	●
	265~300	—	—	—	—	—	●

Conveyor Dimensions

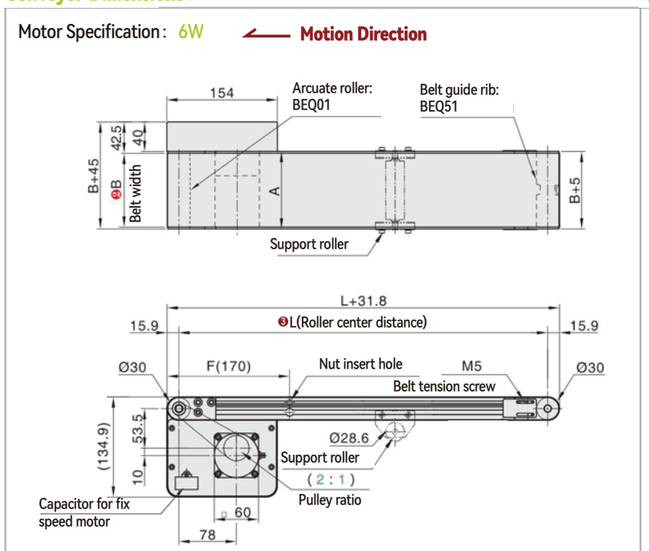

⚠ Above conveyor dimensions is basis on belt thickness H(0.9mm)

Conveyor Profile Section

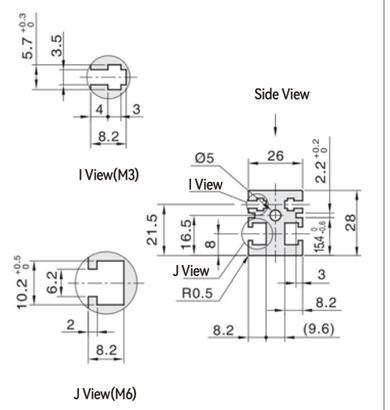

⚠ Nut specification inside aluminum profile slot:
Basis on L (Roller center distance)

190~999	1000~1499	1500~	Position	Spec	Status
4PCS	6PCS	8PCS	I View	M3 (hexagonal)	Accessories
4PCS	6PCS	8PCS	J View	M6(square)	Accessories

Conveyor speed and load capability

Form 1: Gear box ratio and conveyor speed(m/min)

Gear box radio	Fix-speed motor Speed(m/min)	Speed adjustable motor Speed(m/min)	Frequency motor Speed(m/min)	Brushless motor Speed(m/min)
5	50.9	30.5~50.9	63.3	0~113.0
7.5	33.9	20.3~33.9	42.2	0~75.4
10	25.4	15.3~25.4	31.7	0~56.5
12.5	20.3	12.2~20.3	25.3	0~45.2
15	17.0	10.2~17.0	21.1	0~37.7
18	14.1	8.5~14.1	17.6	0~31.4
25	10.2	6.1~10.2	12.7	0~22.6
30	8.5	5.1~8.5	10.6	0~18.8
36	7.1	4.2~7.1	8.8	0~15.7
50	5.1	3.1~5.1	6.3	0~11.3
60	4.2	2.5~4.2	5.3	0~9.4

⚠ Test Condition:B=150 L=1000

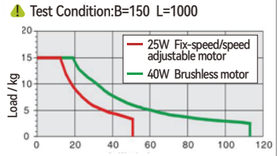

⚠ Speed calculation formula

1.Drive roller diameter D=30mm
2.Speed adjustable motor RPM=1350r/min
3.Frequency motor RPM=1680r/min
4.Brushless motor RPM=3000r/min
5.Belt pulley ratio i2=2:1

$$S=\frac{D\times\pi\times R\times i2}{i1\times1000}$$

$$S=\frac{30\times3.14\times1350\times2}{12.5\times1000}$$

S= 20.3472m/min

Form 2: Pulse quality and conveyor speed(m/min)

Pulse quantity	Conveyor speed(m/min)	57 series stepper motor torque 2.3N.m	2.6N.m	3.1N.m	86 series stepper motor torque 4.5N.m	8.0N.m	—	—
400	22.6	0~4.2	0~4.8	0~5.7	0~8.4	0~15.0	—	—
800	45.2	0~2.1	0~2.4	0~2.9	0~4.2	0~7.5	—	—
1600	90.4	0~1.0	0~1.2	0~1.4	0~2.1	0~3.7	—	—
3200	180.9	0~0.5	0~0.6	0~0.7	0~1.0	0~1.9	—	—
6400	361.7	0~0.3	0~0.3	0~0.4	0~0.5	0~0.9	—	—
12800	723.5	—	—	—	—	—	—	—
25600	1446.9	—	—	—	—	—	—	—
51200	2893.8	—	—	—	—	—	—	—

Instrument 1.Set the current as default 2.Set the code on motor drive
3.Default torque can be modified by current setting.

⚠ Test Condition:B=150 L=1000 Current:5A

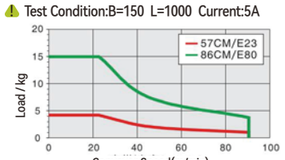

⚠ Speed calculation formula

1.Drive roller diameter D=30mm
2.Pulse quantity=400
3.Stepper motor angle J=1.8°
4.Belt pulley ratio i2=2:1

$$S=\frac{D\times\pi\times(M\times J/360\times60)\times i_2}{1000}$$

$$S=\frac{30\times3.14\times(400\times1.8/360\times60)\times2}{1000}$$

S=22.6m/min

⚠ Conveyor speed and load capability are for reference, the data is measured by testing under specific conditions.

Belt Specification

Underlying Parameter			
• Material:PU • Thickness:0.9mm • Color:Blackish green • Character:General	• Material:PU • Thickness:0.9mm • Color:Bright green • Character:General	• Material:PU • Thickness:0.8mm • Color:Black • Character:ESD	• Material:PU • Thickness:1.0mm • Color:Blackish green • Character:ESD
H	H6	D	D9
Underlying Parameter			
• Material:PU • Thickness:1.2mm • Color:White • Character:Food grade	• Material:PU • Thickness:1mm • Color:Green • Character:Incline	• Material:Pvc • Thickness:1.2mm • Color:Yellow • Character:Special	• Material:Pvc • Thickness:1.2mm • Color:Red • Character:Special
F	Q2	Y2	R

Conveyor for NG part blowing sorting

Product Application Case

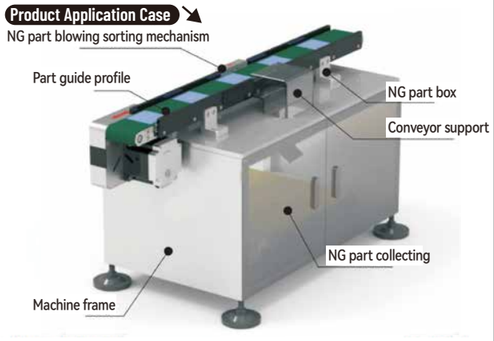

Dual Slots Aluminum Profile



Conveyor Features

Adapt to specified conveyor width and length with small load

※ Please do not exceed the allowed conveyor load and length. Belt thickness should be smaller than 1.2mm due to belt roller diameter.

Series Code	Type	※ Conveyor Features		Material			Surface Treatment		
		Application Features	Motion Features	Aluminum Profile	Motor Cover	Pulley Mounting Board	Aluminum Profile	Motor Cover	Pulley Mounting Board
BEN01	Arcuate roller to avoid belt shift	Belt with good flatness	One-way transfer	Alloy			Surface electrophoresis	Painting	
BEN51	Belt guide rib to avoid belt shift	Belt runs stable, but guide rib may be slight protrusion.	Forward/Reverse transfer						

Model		❸L-Conveyor Length 5mm	Motor Options				❽ Belt Spec	❾ Motor Brand
❶ Series Code	❷B-Belt Width		❹ Output Power(W)	❺ Voltage(V)	❻ Motor Type	❼ Gear box ratio		
BEN01 Arcuate roller BEN51 Belt with guide rib	70~300 Min.Step (5:mm)	355~2000	6 25 40	TA220 Single phase SA220 Three phase	IM Fix-speed motor SCM Speed adjustable motor INV VFD type	5 7.5 10 12.5 15 18 25 30 36 50 60 75 90 100 120 150 180 ⚠ When motor power is 6W gear box ratio can not be 5~10.	H(Blackish green) H6(Bright green) D(Black-ESD) D9(Blackish green-ESD) F(White-Food grade) Q2(Green-incline application) Y2(Yellow- Special type) R(Red- Special type)	GPG JSCC No motor
			25 40	DC24 DC TA220 Single phase	KMC Speed adjustable motor SWS Motor with drive			ZD No motor
			❹ Motor Series	❺ Control method	❻ Output torque	❼ Drive type		❾ Stepper motor brand
			57 series stepper motor	CM Open loop CME Closed loop	23 26 31 45 80	MC Pulse type IO IO type EC IO typeEtherCAT RS RS485 ⚠ Default type: pulse type		S(Leadshine) No motor
			86 series stepper motor					❾ Servo motor brand
			❹ Inertia	❺ Voltage(V)	❻ Output power			S(Leadshine) X(Panasonic) No motor
			MH Servo motor	TA220 Single phase	200W 400W			

※ Recommend motor brand JSCC

Model code example	Conveyor Model	Belt Width	Conveyor Length	Output Power	Voltage	Control Method	Ratio	Belt Type	Motor Brand
Speed adjustable motor	BEN01–	B150 –	L1000 –	25 –	TA220 –	SCM –	12.5 –	H –	G
Model code example	Conveyor Model	Belt Width	Conveyor Length	Motor series	Control Method	Output torque	Drive type	Belt Type	Motor Brand
Stepper motor	BEN51–	B150 –	L1000 –	57 –	CM –	23 –	MC –	H –	S
Model code example	Conveyor Model	Belt Width	Conveyor Length	Inertia	Voltage	Output power	Drive type	Belt Type	Motor Brand
Servo motor	BEN51–	B150 –	L1000 –	MH –	TA220 –	200W –	EC –	H –	X

Recommend belt width and conveyor length							
Model	B	L355 ≀ 400	L405 ≀ 500	L505 ≀ 600	L605 ≀ 800	L805 ≀ 900	L905 ≀ 2000
BEN01 BEN51	70~110	●	●	●	●	●	●
	115~160	●	●	●	●	●	●
	165~210	—	—	●	●	●	●
	215~260	—	—	—	●	●	●
	265~300	—	—	—	—	—	●

Conveyor Dimensions

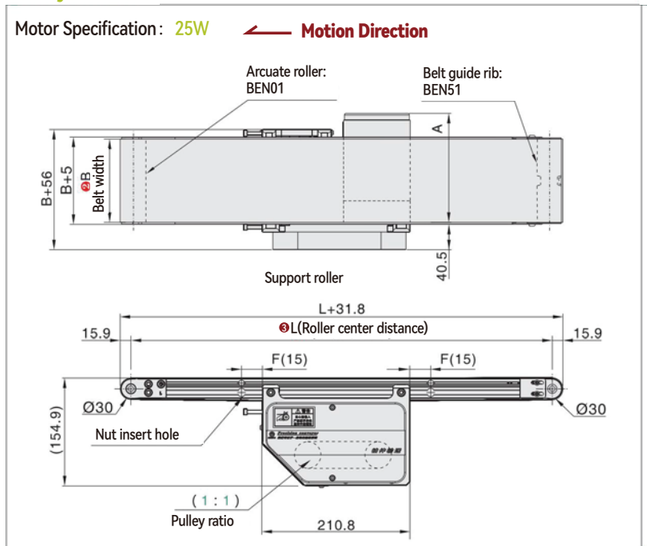

⚠ Above conveyor dimensions is basis on belt thickness H(0.9mm)

Conveyor Profile Section

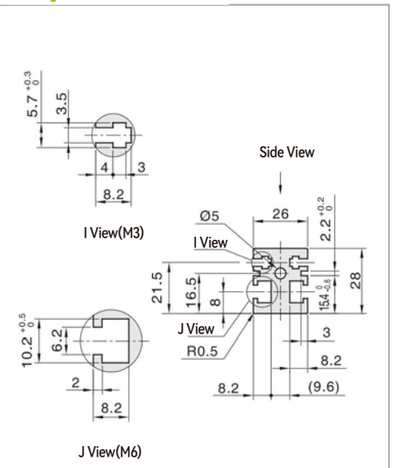

⚠ Nut specification inside aluminum profile slot:
Basis on L (Roller center distance)

355~999	1000~1499	1500~	Position	Spec	Status
4PCS	6PCS	8PCS	I View	M3 (hexagonal)	Accessories
4PCS	6PCS	8PCS	J View	M6(square)	Accessories

Conveyor speed and load capability

Form 1: Gear box ratio and conveyor speed(m/min)

Gear box radio	Fix-speed motor Speed(m/min)	Speed adjustable motor Speed(m/min)	Frequency motor Speed(m/min)	Brushless motor Speed(m/min)
5	42.4	25.4~42.4	52.8	0~94.2
7.5	28.3	17.0~28.3	35.2	0~62.8
10	21.2	12.7~21.2	26.4	0~47.1
12.5	17.0	10.2~17.0	21.1	0~37.7
15	14.1	8.5~14.1	17.6	0~31.4
18	11.8	7.1~11.8	14.7	0~26.2
25	8.5	5.1~8.5	10.6	0~18.8
30	7.1	4.2~7.1	8.8	0~15.7
36	5.9	3.5~5.9	7.3	0~13.1
50	4.2	2.5~4.2	5.3	0~9.4
60	3.5	2.1~3.5	4.4	0~7.9

Form 2: Pulse quality and conveyor speed(m/min)

Pulse quantity	Conveyor speed(m/min)	57 series stepper motor torque 2.3N.m	2.6N.m	3.1N.m	86 series stepper motor torque 4.5N.m	8.0N.m	—	—
400	18.8	0~10.1	0~11.5	0~13.7	0~20.1	0~36.0	—	—
800	37.7	0~5.1	0~5.7	0~6.9	0~10.0	0~18.0	—	—
1600	75.4	0~2.5	0~2.9	0~3.4	0~5.0	0~9.0	—	—
3200	150.7	0~1.3	0~1.4	0~1.7	0~2.5	0~4.5	—	—
6400	301.4	0~0.6	0~0.7	0~0.9	0~1.3	0~2.2	—	—
12800	602.9	—	—	—	—	—	—	—
25600	1205.8	—	—	—	—	—	—	—
51200	2411.5	—	—	—	—	—	—	—

Instrument 1.Set the current as default 2.Set the code on motor drive
3.Default torque can be modified by current setting.

⚠ Test Condition:B=150 L=1000

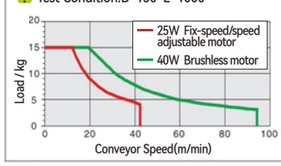

⚠ Speed calculation formula

1.Drive roller diameter D=50mm
2.Speed adjustable motor RPM=1350r/min
3.Frequency motor RPM=1680r/min
4.Brushless motor RPM=3000r/min
5.Belt pulley ratio i2=1:1

$S=\frac{D\times\pi\times R\times i2}{i1\times1000}$

$S=\frac{50\times3.14\times1350\times1}{12.5\times1000}$

S= 16.956m/min

⚠ Test Condition:B=150 L=1000 Current:5A

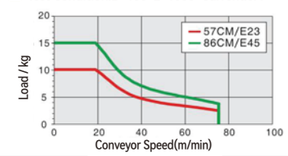

⚠ Speed calculation formula

1.Drive roller diameter D=50mm
2.Pulse quantity=400
3.Stepper motor angle J=1.8°
4.Belt pulley ratio i2=1:1

$S=\frac{D\times\pi\times(M\times J/360\times60)\times i_2}{1000}$

$S=\frac{50\times3.14\times(400\times1.8/360\times60)\times1}{1000}$

S= 18.84m/min

⚠ Conveyor speed and load capability are for reference, the data is measured by testing under specific conditions.

Belt Specification

Underlying Parameter			
• Material:PU • Thickness:0.9mm • Color:Blackish green • Character:General	• Material:PU • Thickness:0.9mm • Color:Bright green • Character:General	• Material:PU • Thickness:0.8mm • Color:Black • Character:ESD	• Material:PU • Thickness:1.0mm • Color:Blackish green • Character:ESD
H	H6	D	D9
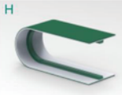	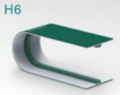	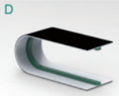	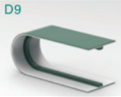
Underlying Parameter			
• Material:PU • Thickness:1.2mm • Color:White • Character:Food grade	• Material:PU • Thickness:1mm • Color:Green • Character:Incline	• Material:Pvc • Thickness:1.2mm • Color:Yellow • Character:Special	• Material:Pvc • Thickness:1.2mm • Color:Red • Character:Special
F	Q2	Y2	R
	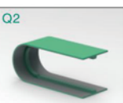		

Conveyor with sorting mechanism

Product Application Case

NG part blowing sorting mechanism

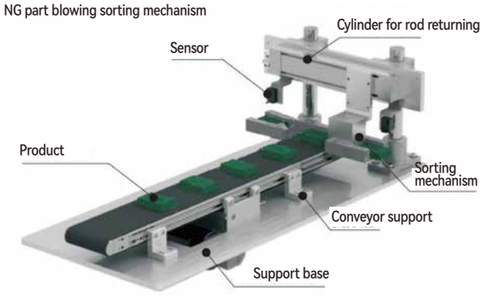

Dual Slots Aluminum Profilee



Conveyor Features

Adapt to specified conveyor width and length with small load, motor downward to reduce conveyor total width

※ Please do not exceed the allowed conveyor load and length. Belt thickness should be smaller than 1.2mm due to belt roller diameter.

Series Code	Type	※ Conveyor Features		Material			Surface Treatment		
		Application Features	Motion Features	Aluminum Profile	Motor Cover	Pulley Mounting Board	Aluminum Profile	Motor Cover	Pulley Mounting Board
BED51	Belt guide rib to avoid belt shift	Belt runs stable, but guide rib may be slight protrusion.	Forward Reverse transfer	Alloy			Surface electrophoresis	Painting	

Model		❸L-Conveyor Length 5mm	Motor Options					❽ Belt Spec	❾ Motor Brand
❶ Series Code	❷B-Belt Width		❹ Output Power(W)	❺ Voltage(V)	❻ Motor Type	❼ Gear box ratio			
BED51 Belt with guide rib	50~300 Min.Step (5:mm)	220~600	6 25 40	TA220 Single phase	IM Fix-speed motor SCM Speed adjustable motor	5 7.5 10 12.5 15 18 25 30 36 50 60 75 90 100 120 150 180 ⚠ When motor power is 6W gear box ratio can not be 5~10.		H(Blackish green) H6(Bright green) D(Black-ESD) D9(Blackish green-ESD) F(White-Food grade) Q2(Green-incline application) Y2(Yellow- Special type) R(Red- Special type)	GPG JSCC No motor
				SA220 Three phase	INV VFD type				ZD No motor
			25 40	DC24 DC TA220 Single phase	KMC Speed adjustable motor SWS Motor with drive				
			❹ Motor Series	❺ Control method	❻ Output torque	❼ Drive type			❾ Stepper motor brand
			57 series stepper motor	CM Open loop	23 26 31	MC Pulse type IO IO type EC IO typeEtherCAT RS RS485 ⚠ Default type: pulse type			S(Leadshine) No motor
			86 series stepper motor	CME Closed loop	45 80				
			❹ Inertia	❺ Voltage(V)	❻ Output power				❾ Servo motor brand
			MH Servo motor	TA220 Single phase	200W 400W				S(Leadshine) X(Panasonic) No motor

※ Recommend motor brand JSCC

Model code example	Conveyor Model	Belt Width	Conveyor Length	Output Power	Voltage	Control Method	Ratio	Belt Type	Motor Brand
Speed adjustable motor	BED51–	B150 –	L600 –	25 –	TA220 –	SCM –	12.5 –	H –	G
Model code example	Conveyor Model	Belt Width	Conveyor Length	Motor series	Control Method	Output torque	Drive type	Belt Type	Motor Brand
Stepper motor	BED51–	B150 –	L600 –	57 –	CM –	23 –	MC –	H –	S
Model code example	Conveyor Model	Belt Width	Conveyor Length	Inertia	Voltage	Output power	Drive type	Belt Type	Motor Brand
Servo motor	BED51–	B150 –	L600 –	MH –	TA220 –	200W –	EC –	H –	X

Model	B	L220 ≀ 250	L255 ≀ 275	L280 ≀ 300	L305 ≀ 325	L330 ≀ 375	L380 ≀ 600
BED51 ⚠ "—"	50~110	●	●	●	●	●	●
	110~150	●	●	●	●	●	●
	160~200	●	●	●	●	●	●
	210~250	—	●	●	●	●	●
	260~300	—	—	—	●	●	●

Conveyor Dimensions

Motor Specification : 6W ⟵ Motion Direction

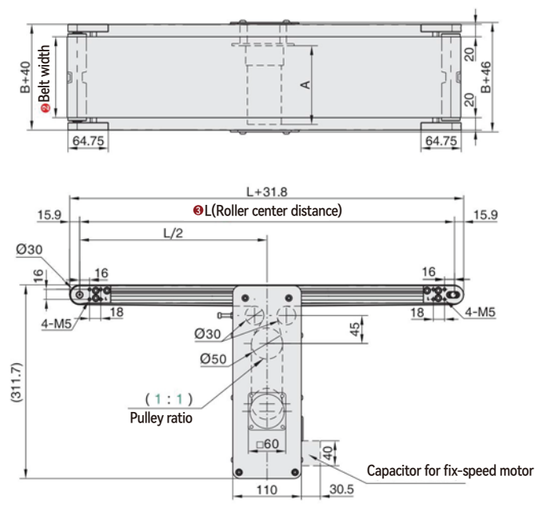

⚠ Above conveyor dimensions is basis on belt thickness H(0.9mm)

Conveyor Profile Section

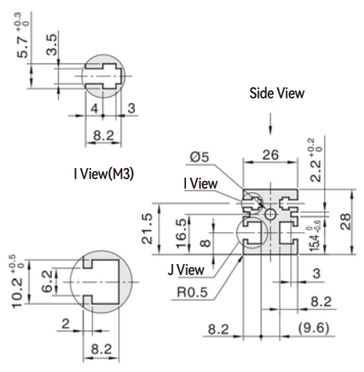

⚠ Nut specification inside aluminum profile slot: Basis on L (Roller center distance)

220~600	—	—	Position	Spec	Status
4PCS	—	—	I View	M3 (hexagonal)	Pre-insert
4PCS	—	—	J View	M6(square)	Pre-insert

Conveyor speed and load capability

Form 1: Gear box ratio and conveyor speed(m/min)

Gear box radio	Fix-speed motor Speed(m/min)	Speed adjustable motor Speed(m/min)	Frequency motor Speed(m/min)	Brushless motor Speed(m/min)
5	42.4	25.4~42.4	52.8	0~94.2
7.5	28.3	17.0~28.3	35.2	0~62.8
10	21.2	12.7~21.2	26.4	0~47.1
12.5	17.0	10.2~17.0	21.1	0~37.7
15	14.1	8.5~14.1	17.6	0~31.4
18	11.8	7.1~11.8	14.7	0~26.2
25	8.5	5.1~8.5	10.6	0~18.8
30	7.1	4.2~7.1	8.8	0~15.7
36	5.9	3.5~5.9	7.3	0~13.1
50	4.2	2.5~4.2	5.3	0~9.4
60	3.5	2.1~3.5	4.4	0~7.9

Form 2: Pulse quality and conveyor speed(m/min)

Pulse quantity	Conveyor speed(m/min)	57 series stepper motor torque			86 series stepper motor torque			
		2.3N.m	2.6N.m	3.1N.m	4.5N.m	8.0N.m	—	—
400	18.8	0~10.1	0~11.5	0~13.7	0~20.1	0~36.0	—	—
800	37.7	0~5.1	0~5.7	0~6.9	0~10.0	0~18.0	—	—
1600	75.4	0~2.5	0~2.9	0~3.4	0~5.0	0~9.0	—	—
3200	150.7	0~1.3	0~1.4	0~1.7	0~2.5	0~4.5	—	—
6400	301.4	0~0.6	0~0.7	0~0.9	0~1.3	0~2.2	—	—
12800	602.9	—	—	—	—	—	—	—
25600	1205.8	—	—	—	—	—	—	—
51200	2411.5	—	—	—	—	—	—	—

Instrument 1.Set the current as default 2.Set the code on motor drive 3.Default torque can be modified by current setting.

⚠ Test Condition:B=150 L=1000

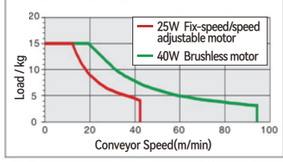

⚠ Speed calculation formula

1.Drive roller diameter D=50mm
2.Speed adjustable motor RPM=1350r/min
3.Frequency motor RPM=1680r/min
4.Brushless motor RPM=3000r/min
5.Belt pulley ratio i2=1:1

$S=\frac{D\times\pi\times R\times i2}{i1\times1000}$

$S=\frac{50\times3.14\times1350\times1}{12.5\times1000}$

S= 16.956m/min

⚠ Test Condition:B=150 L=1000 Current:5A

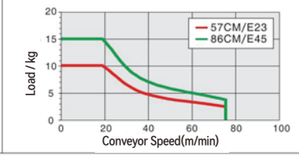

⚠ Speed calculation formula

1.Drive roller diameter D=50mm
2.Pulse quantity=400
3.Stepper motor angle J=1.8°
4.Belt pulley ratio i2=1:1

$S=\frac{D\times\pi\times(M\times J/360\times60)\times i_2}{1000}$

$S=\frac{50\times3.14\times(400\times1.8/360\times60)\times1}{1000}$

S= 18.84m/min

⚠ Conveyor speed and load capability are for reference, the data is measured by testing under specific conditions.

Belt Specification

Underlying Parameter			
• Material:PU • Thickness:0.9mm • Color:Blackish green • Character:General	• Material:PU • Thickness:0.9mm • Color:Bright green • Character:General	• Material:PU • Thickness:0.8mm • Color:Black • Character:ESD	• Material:PU • Thickness:1.0mm • Color:Blackish green • Character:ESD
H	H6	D	D9
Underlying Parameter			
• Material:PU • Thickness:1.2mm • Color:White • Character:Food grade	• Material:PU • Thickness:1mm • Color:Green • Character:Incline	• Material:Pvc • Thickness:1.2mm • Color:Yellow • Character:Special	• Material:Pvc • Thickness:1.2mm • Color:Red • Character:Special
F	Q2	Y2	R

Conveyor for product transferring in a narrow place

Product Application Case

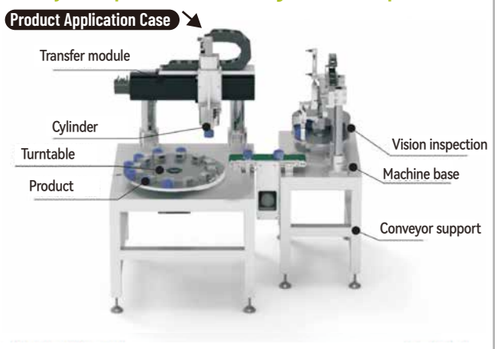

Dual Slots Aluminum Profilee



Conveyor Features

Conveyor section made of 2040 EU standard aluminum profile for small to medium load

※ Please do not exceed the allowed conveyor load and length. Belt thickness should be smaller than 1.2mm due to belt roller diameter.

Series Code	Type	※ Conveyor Features		Material			Surface Treatment		
		Application Features	Motion Features	Aluminum Profile	Motor Cover	Pulley Mounting Board	Aluminum Profile	Motor Cover	Pulley Mounting Board
BFT01	Arcuate roller to avoid belt shift	Belt with good flatness	One-way transfer	Alloy			Surface anodizing	Painting	
BFT51	Belt guide rib to avoid belt shift	Belt runs stable, but guide rib may be slight protrusion.	Forward/Reverse transfer						

Model		❸L-Conveyor Length 5mm	Motor Options					❽ Belt Spec	❾ Motor Brand
❶ Series Code	❷B-Belt Width		❹ Output Power(W)	❺ Voltage(V)	❻ Motor Type	❼ Gear box ratio			
BFT01 Arcuate roller BFT51 Belt with guide rib	60~400 Min.Step (5:mm)	300~3000	25 40 60	TA220 Single phase SA220 Three phase	IM Fix-speed motor SCM Speed adjustable motor INV VFD type	5 7.5 10 12.5 15 18 25 30 36 50 60 75 90 100 120 150 180 ⚠ When motor power is 6W gear box ratio can not be 5~10.		H3(Bright green) H9(Black) D(Black-ESD) D9(Blackish green-ESD) F(White-Food grade) Q2(Green-incline application) Y2(Yellow- Special type) R(Red- Special type)	GPG JSCC No motor
			25 40	DC24 DC TA220 Single phase	KMC Speed adjustable motor SWS Motor with drive				ZD No motor
			❹ Motor Series	❺ Control method	❻ Output torque	❼ Drive type			❾ Stepper motor brand
			57 series stepper motor	CM Open loop	23 26 31	MC Pulse type IO IO type EC IO typeEtherCAT RS RS485 ⚠ Default type: pulse type			S(Leadshine) No motor
			86 series stepper motor	CME Closed loop	45 80 120				❾ Servo motor brand
			❹ Inertia	❺ Voltage(V)	❻ Output power				S(Leadshine) X(Panasonic) No motor
			MH Servo motor	TA220 Single phase	400W 750W				

※ Recommend motor brand JSCC

Model code example	Conveyor Model	Belt Width	Conveyor Length	Output Power	Voltage	Control Method	Ratio	Belt Type	Motor Brand
Speed adjustable motor	BFT01–	B200 –	L1000 –	25 –	TA220 –	SCM –	12.5 –	H3 –	G
Model code example	Conveyor Model	Belt Width	Conveyor Length	Motor series	Control Method	Output torque	Drive type	Belt Type	Motor Brand
Stepper motor	BFT51–	B200 –	L1000 –	57 –	CM –	23 –	MC –	H3 –	S
Model code example	Conveyor Model	Belt Width	Conveyor Length	Inertia	Voltage	Output power	Drive type	Belt Type	Motor Brand
Servo motor	BFT51–	B200 –	L1000 –	MH –	TA220 –	400W –	EC –	H3 –	X

Recommend belt width and conveyor length

Model	B	L300 ≀ 400	L405 ≀ 500	L505 ≀ 600	L605 ≀ 700	L705 ≀ 800	L805 ≀ 3000
BFT01 BFT51	60~110	●	●	●	●	●	●
	115~160	●	●	●	●	●	●
	165~210	—	—	●	●	●	●
	215~310	—	—	—	●	●	●
	315~400	—	—	—	—	—	●

Conveyor Dimensions

Motor Specification : 40W ⟵ Motion Direction

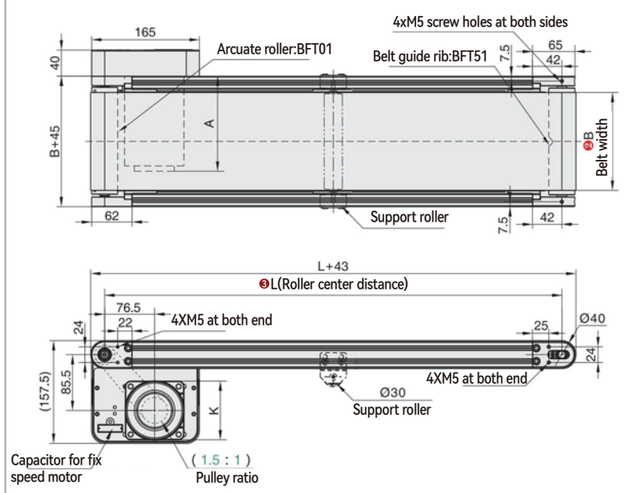

⚠ Above conveyor dimensions is basis on belt thickness H3(1.5mm).

Conveyor Profile Section

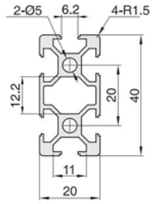

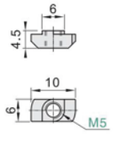

Nut is offered as accessory.

⚠ Nut specification inside aluminum profile slot:
Basis on L (Roller center distance)

300~999	1000~1499	1500~	Position	Spec	Status
16PCS	24PCS	32PCS	—	M5 (T type)	Accessory
—	—	—	—	—	—

Conveyor speed and load capability

Form 1: Gear box ratio and conveyor speed(m/min)

Gear box radio	Fix-speed motor Speed(m/min)	Speed adjustable motor Speed(m/min)	Frequency motor Speed(m/min)	Brushless motor Speed(m/min)
5	50.9	30.5~50.9	63.3	0~113.0
7.5	33.9	20.3~33.9	42.2	0~75.4
10	25.4	15.3~25.4	31.7	0~56.5
12.5	20.3	12.2~20.3	25.3	0~45.2
15	17.0	10.2~17.0	21.1	0~37.7
18	14.1	8.5~14.1	17.6	0~31.4
25	10.2	6.1~10.2	12.7	0~22.6
30	8.5	5.1~8.5	10.6	0~18.8
36	7.1	4.2~7.1	8.8	0~15.7
50	5.1	3.1~5.1	6.3	0~11.3
60	4.2	2.5~4.2	5.3	0~9.4

⚠ Test Condition:B=150 L=1000

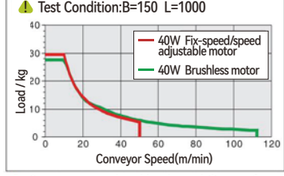

⚠ Speed calculation formula

1.Drive roller diameter D=40mm
2.Speed adjustable motor RPM=1350r/min
3.Frequency motor RPM=1680r/min
4.Brushless motor RPM=3000r/min
5.Belt pulley ratio i2=1.5:1

$$S=\frac{D\times\pi\times R\times i2}{i1\times1000}$$

$$S=\frac{40\times3.14\times1350\times1.5}{12.5\times1000}$$

S=20.3472m/min

Form 2: Pulse quality and conveyor speed(m/min)

Pulse quantity	Conveyor speed(m/min)	57 series stepper motor torque 2.3N.m	2.6N.m	3.1N.m	86 series stepper motor torque 4.5N.m	8.0N.m	12.0N.m	—
400	22.6	0~5.5	0~6.3	0~7.5	0~11.1	0~19.9	0~30.0	—
800	45.2	0~2.8	0~3.1	0~3.8	0~5.5	0~9.9	0~15.0	—
1600	90.4	0~1.4	0~1.6	0~1.9	0~2.8	0~5.0	0~7.5	—
3200	180.9	0~0.7	0~0.8	0~0.9	0~1.4	0~2.5	0~3.7	—
6400	361.7	0~0.3	0~0.4	0~0.5	0~0.7	0~1.2	0~1.9	—
12800	723.5	—	—	—	—	—	—	—
25600	1446.9	—	—	—	—	—	—	—
51200	2893.8	—	—	—	—	—	—	—

Instrument 1.Set the current as default 2.Set the code on motor drive
3.Default torque can be modified by current setting.

⚠ Test Condition:B=200 L=1000 Current:5A

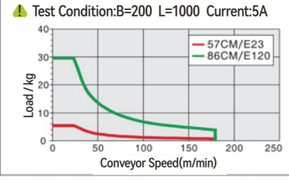

⚠ Speed calculation formula

1.Drive roller diameter D=40mm
2.Pulse quantity=400
3.Stepper motor angle J=1.8°
4.Belt pulley ratio i2=1.5:1

$$S=\frac{D\times\pi\times(M\times J/360\times60)\times i_2}{1000}$$

$$S=\frac{40\times3.14\times(400\times1.8/360\times60)\times1.5}{1000}$$

S=22.608m/min

⚠ Conveyor speed and load capability are for reference, the data is measured by testing under specific conditions.

Belt Specification

Underlying Parameter			
• Material:Pvc • Thickness:1.5mm • Color:Bright green • Character:General	• Material:Pvc • Thickness:2.0mm • Color:Black • Character:General	• Material:PU • Thickness:0.8mm • Color:Black • Character:ESD	• Material:PU • Thickness:1.0mm • Color:Blackish green • Character:ESD
H3	H9	D	D9
Underlying Parameter			
• Material:PU • Thickness:1.2mm • Color:White • Character:Food grade	• Material:PU • Thickness:1mm • Color:Green • Character:Incline	• Material:Pvc • Thickness:1.2mm • Color:Yellow • Character:Special	• Material:Pvc • Thickness:1.2mm • Color:Red • Character:Special
F	Q2	Y2	R

Conveyor with product guide profile and legs

Product Application Case

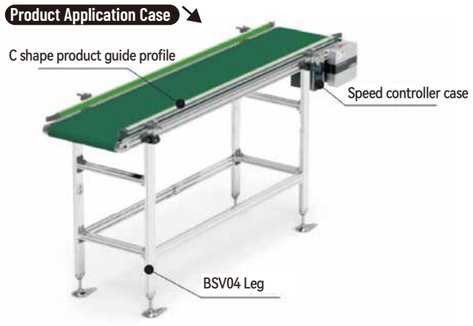

Dual Slots Aluminum Profilee



Conveyor Features

Conveyor section made of 2040 EU standard aluminum profile for small to medium load

※ Please do not exceed the allowed conveyor load and length. Belt thickness should be smaller than 1.2mm due to belt roller diameter.

Series Code	Type	※ Conveyor Features		Material			Surface Treatment		
		Application Features	Motion Features	Aluminum Profile	Motor Cover	Pulley Mounting Board	Aluminum Profile	Motor Cover	Pulley Mounting Board
BFZ01	Arcuate roller to avoid belt shift	Belt with good flatness	One-way transfer	Alloy			Surface anodizing	Painting	
BFZ51	Belt guide rib to avoid belt shift	Belt runs stable, but guide rib may be slight protrusion.	Forward/Reverse transfer						

Model		❸L-Conveyor Length 5mm	Motor Options				❽ Belt Spec	❾ Motor Brand
❶ Series Code	❷B-Belt Width		❹ Output Power(W)	❺ Voltage(V)	❻ Motor Type	❼ Gear box ratio		
BFZ01 Arcuate roller BFZ51 Belt with guide rib	60~400 Min.Step (5:mm)	400~3000	25 40 60	TA220 Single phase SA220 Three phase	IM Fix-speed motor SCM Speed adjustable motor INV VFD type	5 7.5 10 12.5 15 18 25 30 36 50 60 75 90 100 120 150 180 ⚠ When motor power is 6W gear box ratio can not be 5~10.	H3(Bright green) H9(Black) D(Black-ESD) D9(Blackish green-ESD) F(White-Food grade) Q2(Green-incline application) Y2(Yellow- Special type) R(Red- Special type)	GPG JSCC No motor
			25 40	DC24 DC TA220 Single phase	KMC Speed adjustable motor SWS Motor with drive			ZD No motor
			❹ Motor Series	❺ Control method	❻ Output torque	❼ Drive type		❾ Stepper motor brand
			57 series stepper motor 86 series stepper motor	CM Open loop CME Closed loop	23 26 31 45 80 120	MC Pulse type IO IO type EC IO typeEtherCAT RS RS485 ⚠ Default type: pulse type		S(Leadshine) No motor
			❹ Inertia	❺ Voltage(V)	❻ Output power			❾ Servo motor brand
			MH Servo motor	TA220 Single phase	400W 750W			S(Leadshine) X(Panasonic) No motor

※ Recommend motor brand JSCC

Model code example	Conveyor Model	Belt Width	Conveyor Length	Output Power	Voltage	Control Method	Ratio	Belt Type	Motor Brand
Speed adjustable motor	BFZ01–	B200 –	L1000 –	25 –	TA220 –	SCM –	12.5 –	H3 –	G
Model code example	Conveyor Model	Belt Width	Conveyor Length	Motor series	Control Method	Output torque	Drive type	Belt Type	Motor Brand
Stepper motor	BFZ51–	B200 –	L1000 –	57 –	CM –	23 –	MC –	H3 –	S
Model code example	Conveyor Model	Belt Width	Conveyor Length	Inertia	Voltage	Output power	Drive type	Belt Type	Motor Brand
Servo motor	BFZ51–	B200 –	L1000 –	MH –	TA220 –	400W –	EC –	H3 –	X

Recommend belt width and conveyor length							
Model	B	L400 ≀ 500	L505 ≀ 600	L605 ≀ 700	L705 ≀ 800	L805 ≀ 900	L905 ≀ 3000
BFZ01 BFZ51	60~110	●	●	●	●	●	●
	115~160	●	●	●	●	●	●
	165~210	—	●	●	●	●	●
	215~310	—	—	●	●	●	●
	315~400	—	—	—	—	●	●

Conveyor Dimensions

Motor Specification : 40W ⟵ Motion Direction

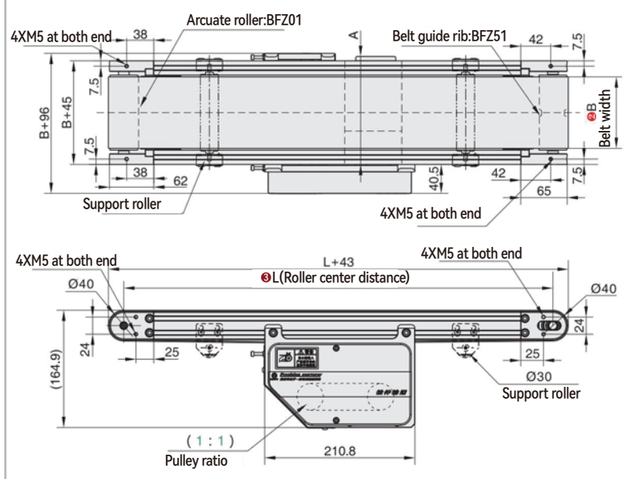

⚠ Above conveyor dimensions is basis on belt thickness H3(1.5mm).

Conveyor Profile Section

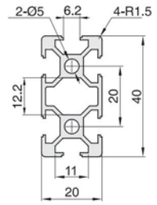

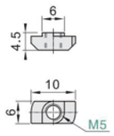

Nut is offered as accessory.

⚠ Nut specification inside aluminum profile slot:
Basis on L (Roller center distance)

400~999	1000~1499	1500~	Position	Spec	Status
16PCS	24PCS	32PCS	—	M5 (T type)	Accessory
—	—	—	—	—	—

Conveyor speed and load capability

Form 1: Gear box ratio and conveyor speed(m/min)

Gear box radio	Fix-speed motor Speed(m/min)	Speed adjustable motor Speed(m/min)	Frequency motor Speed(m/min)	Brushless motor Speed(m/min)
5	42.4	25.4~42.4	52.8	0~94.2
7.5	28.3	17.0~28.3	35.2	0~62.8
10	21.2	12.7~21.2	26.4	0~47.1
12.5	17.0	10.2~17.0	21.1	0~37.7
15	14.1	8.5~14.1	17.6	0~31.4
18	11.8	7.1~11.8	14.7	0~26.2
25	8.5	5.1~8.5	10.6	0~18.8
30	7.1	4.2~7.1	8.8	0~15.7
36	5.9	3.5~5.9	7.3	0~13.1
50	4.2	2.5~4.2	5.3	0~9.4
60	3.5	2.1~3.5	4.4	0~7.9

⚠ Test Condition:B=200 L=1000

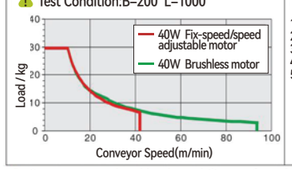

⚠ Speed calculation formula

1.Drive roller diameter D=50mm
2.Speed adjustable motor RPM=1350r/min
3.Frequency motor RPM=1680r/min
4.Brushless motor RPM=3000r/min
5.Belt pulley ratio i2=1:1

$$S=\frac{D\times\pi\times R\times i2}{i1\times1000}$$

$$S=\frac{50\times3.14\times1350\times1}{12.5\times1000}$$

S= 16.956m/min

Form 2: Pulse quality and conveyor speed(m/min)

Pulse quantity	Conveyor speed(m/min)	57 series stepper motor torque 2.3N.m	2.6N.m	3.1N.m	86 series stepper motor torque 4.5N.m	8.0N.m	12.0N.m	—
400	18.8	0~10.0	0~11.4	0~13.6	0~20.0	0~35.8	0~54.0	—
800	37.7	0~5.0	0~5.7	0~6.8	0~10.0	0~17.9	0~27.0	—
1600	75.4	0~2.5	0~2.8	0~3.4	0~5.0	0~9.0	0~13.5	—
3200	150.7	0~1.3	0~1.4	0~1.7	0~2.5	0~4.5	0~6.8	—
6400	301.4	0~0.6	0~0.7	0~0.9	0~1.2	0~2.2	0~3.4	—
12800	602.9	—	—	—	—	—	—	—
25600	1205.8	—	—	—	—	—	—	—
51200	2411.5	—	—	—	—	—	—	—

Instrument 1.Set the current as default 2.Set the code on motor drive
3.Default torque can be modified by current setting.

⚠ Test Condition:B=200 L=1000 Current:5A

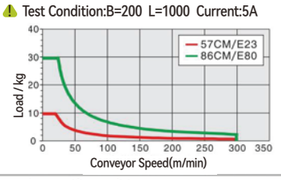

⚠ Speed calculation formula

1.Drive roller diameter D=50mm
2.Pulse quantity=400
3.Stepper motor angle J=1.8°
4.Belt pulley ratio i2=1:1

$$S=\frac{D\times\pi\times(M\times J/360\times60)\times i_2}{1000}$$

$$S=\frac{50\times3.14\times(400\times1.8/360\times60)\times1}{1000}$$

S= 18.84m/min

⚠ Conveyor speed and load capability are for reference, the data is measured by testing under specific conditions.

Belt Specification

Underlying Parameter			
• Material:Pvc • Thickness:1.5mm • Color:Bright green • Character:General	• Material:Pvc • Thickness:2.0mm • Color:Black • Character:General	• Material:PU • Thickness:0.8mm • Color:Black • Character:ESD	• Material:PU • Thickness:1.0mm • Color:Blackish green • Character:ESD
H3	H9	D	D9
Underlying Parameter			
• Material:PU • Thickness:1.2mm • Color:White • Character:Food grade	• Material:PU • Thickness:1mm • Color:Green • Character:Incline	• Material:Pvc • Thickness:1.2mm • Color:Yellow • Character:Special	• Material:Pvc • Thickness:1.2mm • Color:Red • Character:Special
F	Q2	Y2	R

Conveyor solution for product testing

Product Application Case

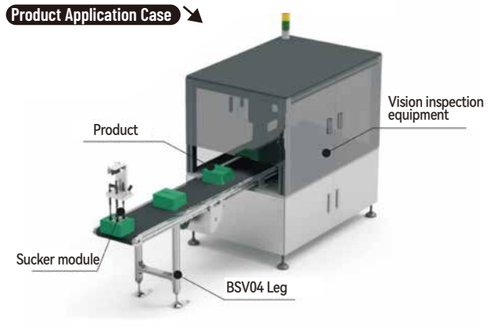

Dual Slots Aluminum Profilee

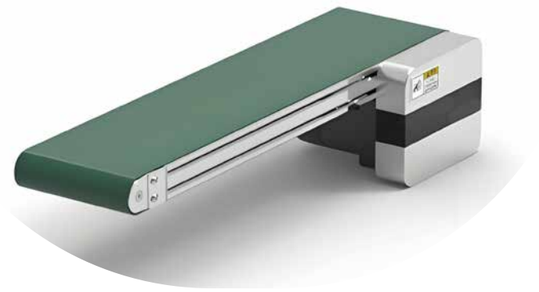

Conveyor Features

Conveyor section made of 2040 EU standard aluminum profile for small to medium load

※ Please do not exceed the allowed conveyor load and length. Belt thickness should be smaller than 1.2mm due to belt roller diameter.

Series Code	Type	※ Conveyor Features		Material			Surface Treatment		
		Application Features	Motion Features	Aluminum Profile	Motor Cover	Pulley Mounting Board	Aluminum Profile	Motor Cover	Pulley Mounting Board
BFQ01	Arcuate roller to avoid belt shift	Belt with good flatness	One-way transfer	Alloy			Surface anodizing	Painting	
BFQ51	Belt guide rib to avoid belt shift	Belt runs stable, but guide rib may be slight protrusion.	Forward/Reverse transfer						

Model		❸L-Conveyor Length 5mm	Motor Options				❽ Belt Spec	❾ Motor Brand
❶ Series Code	❷B-Belt Width		❹ Output Power(W)	❺ Voltage(V)	❻ Motor Type	❼ Gear box ratio		
BFQ01 Arcuate roller BFQ51 Belt with guide rib	80~400 Min.Step (5:mm)	300~3000	25 40 60	TA220 Single phase SA220 Three phase	IM Fix-speed motor SCM Speed adjustable motor INV VFD type	5 7.5 10 12.5 15 18 25 30 36 50 60 75 90 100 120 150 180 ⚠ When motor power is 6W gear box ratio can not be 5~10.	H3(Bright green) H9(Black) D(Black-ESD) D9(Blackish green-ESD) F(White-Food grade) Q2(Green-incline application) Y2(Yellow- Special type) R(Red- Special type)	GPG JSCC No motor
			25 40	DC24 DC TA220 Single phase	KMC Speed adjustable motor SWS Motor with drive			ZD No motor
			❹ Motor Series	❺ Control method	❻ Output torque	❼ Drive type		❾ Stepper motor brand
			57 series stepper motor	CM Open loop	23 26 31	MC Pulse type IO IO type EC IO typeEtherCAT RS RS485 ⚠ Default type: pulse type		S(Leadshine) No motor
			86 series stepper motor	CME Closed loop	45 80 120			❾ Servo motor brand
			❹ Inertia	❺ Voltage(V)	❻ Output power			S(Leadshine) X(Panasonic) No motor
			MH Servo motor	TA220 Single phase	400W 750W			

※ Recommend motor brand JSCC

Model code example	Conveyor Model	Belt Width	Conveyor Length	Output Power	Voltage	Control Method	Ratio	Belt Type	Motor Brand
Speed adjustable motor	BFQ01–	B200 –	L1000 –	25 –	TA220 –	SCM –	12.5 –	H3 –	G
Model code example	Conveyor Model	Belt Width	Conveyor Length	Motor series	Control Method	Output torque	Drive type	Belt Type	Motor Brand
Stepper motor	BFQ51–	B200 –	L1000 –	57 –	CM –	23 –	MC –	H3 –	S
Model code example	Conveyor Model	Belt Width	Conveyor Length	Inertia	Voltage	Output power	Drive type	Belt Type	Motor Brand
Servo motor	BFQ51–	B200 –	L1000 –	MH –	TA220 –	400W –	EC –	H3 –	X

Recommend belt width and conveyor length

Model	B	L300 ≀ 400	L405 ≀ 500	L505 ≀ 600	L605 ≀ 700	L705 ≀ 800	L805 ≀ 3000
BFQ01 BFQ51	80~110	●	●	●	●	●	●
	115~160	●	●	●	●	●	●
	165~210	—	—	●	●	●	●
	215~310	—	—	—	●	●	●
	315~400	—	—	—	—	—	●

Conveyor Dimensions

Motor Specification : 40W ⟵ Motion Direction

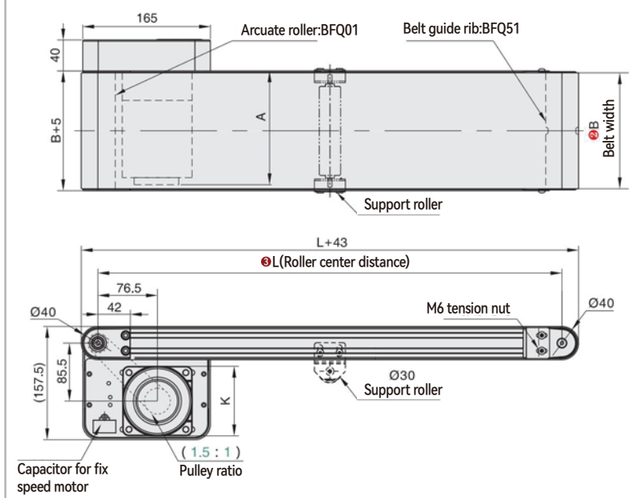

⚠ Above conveyor dimensions is basis on belt thickness H3(1.5mm).

Conveyor Profile Section

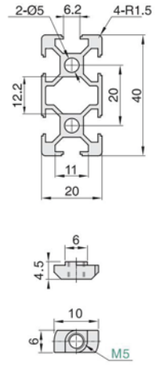

Nut is offered as accessory.

⚠ Nut specification inside aluminum profile slot: Basis on L (Roller center distance)

300~999	1000~1499	1500~	Position	Spec	Status
16PCS	24PCS	32PCS	—	M5 (T type)	Accessory
—	—	—	—	—	—

Conveyor speed and load capability

Form 1: Gear box ratio and conveyor speed(m/min)

Gear box radio	Fix-speed motor Speed(m/min)	Speed adjustable motor Speed(m/min)	Frequency motor Speed(m/min)	Brushless motor Speed(m/min)
5	50.9	30.5~50.9	63.3	0~113.0
7.5	33.9	20.3~33.9	42.2	0~75.4
10	25.4	15.3~25.4	31.7	0~56.5
12.5	20.3	12.2~20.3	25.3	0~45.2
15	17.0	10.2~17.0	21.1	0~37.7
18	14.1	8.5~14.1	17.6	0~31.4
25	10.2	6.1~10.2	12.7	0~22.6
30	8.5	5.1~8.5	10.6	0~18.8
36	7.1	4.2~7.1	8.8	0~15.7
50	5.1	3.1~5.1	6.3	0~11.3
60	4.2	2.5~4.2	5.3	0~9.4

Form 2: Pulse quality and conveyor speed(m/min)

Pulse quantity	Conveyor speed(m/min)	57 series stepper motor torque 2.3N.m	2.6N.m	3.1N.m	86 series stepper motor torque 4.5N.m	8.0N.m	12.0N.m	—
400	22.6	0~5.5	0~6.3	0~7.5	0~11.1	0~19.9	0~30.0	—
800	45.2	0~2.8	0~3.1	0~3.8	0~5.5	0~9.9	0~15.0	—
1600	90.4	0~1.4	0~1.6	0~1.9	0~2.8	0~5.0	0~7.5	—
3200	180.9	0~0.7	0~0.8	0~0.9	0~1.4	0~2.5	0~3.7	—
6400	361.7	0~0.3	0~0.4	0~0.5	0~0.7	0~1.2	0~1.9	—
12800	723.5	—	—	—	—	—	—	—
25600	1446.9	—	—	—	—	—	—	—
51200	2893.8	—	—	—	—	—	—	—

Instrument 1.Set the current as default 2.Set the code on motor drive 3.Default torque can be modified by current setting.

⚠ Test Condition:B=200 L=1000

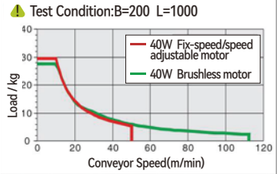

⚠ Speed calculation formula

1.Drive roller diameter D=40mm
2.Speed adjustable motor RPM=1350r/min
3.Frequency motor RPM=1680r/min
4.Brushless motor RPM=3000r/min
5.Belt pulley ratio i2=1.5:1

$$S=\frac{D\times\pi\times R\times i2}{i1\times1000}$$

$$S=\frac{40\times3.14\times1350\times1.5}{12.5\times1000}$$

S= 20.3472m/min

⚠ Test Condition:B=200 L=1000 Current:5A

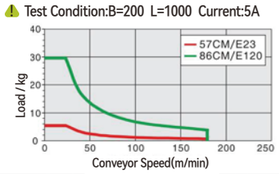

⚠ Speed calculation formula

1.Drive roller diameter D=40mm
2.Pulse quantity=400
3.Stepper motor angle J=1.8°
4.Belt pulley ratio i2=1.5:1

$$S=\frac{D\times\pi\times(M\times J/360\times60)\times i_2}{1000}$$

$$S=\frac{40\times3.14\times(400\times1.8/360\times60)\times1.5}{1000}$$

S=22.608m/min

⚠ Conveyor speed and load capability are for reference, the data is measured by testing under specific conditions.

Belt Specification

Underlying Parameter			
• Material:Pvc • Thickness:1.5mm • Color:Bright green • Character:General	• Material:Pvc • Thickness:2.0mm • Color:Black • Character:General	• Material:PU • Thickness:0.8mm • Color:Black • Character:ESD	• Material:PU • Thickness:1.0mm • Color:Blackish green • Character:ESD
H3	H9	D	D9
Underlying Parameter			
• Material:PU • Thickness:1.2mm • Color:White • Character:Food grade	• Material:PU • Thickness:1mm • Color:Green • Character:Incline	•Material:Pvc •Thickness:1.2mm •Color:Yellow •Character:Special	•Material:Pvc •Thickness:1.2mm •Color:Red •Character:Special
F	Q2	Y2	R

Conveyor solution for product testing

Product Application Case



Dual Slots Aluminum Profilee



Conveyor Features

Overall belt conveyor for specified width and length
adapt to small and medium load. Drive unit position can be shifted

※ Please do not exceed the allowed conveyor load and length. Belt thickness should be smaller than 1.2mm due to belt roller diameter.

Series Code	Type	※ Conveyor Features		Material			Surface Treatment		
		Application Features	Motion Features	Aluminum Profile	Motor Cover	Pulley Mounting Board	Aluminum Profile	Motor Cover	Pulley Mounting Board
BFN01	Arcuate roller to avoid belt shift	Belt with good flatness	One-way transfer	Alloy			Surface anodizing	Painting	
BFN51	Belt guide rib to avoid belt shift	Belt runs stable, but guide rib may be slight protrusion.	Forward/Reverse transfer						

Model		❸L-Conveyor Length 5mm	Motor Options					❽ Belt Spec	❾ Motor Brand
❶ Series Code	❷B-Belt Width		❹ Output Power(W)	❺ Voltage(V)	❻ Motor Type	❼ Gear box ratio			
BFN01 Arcuate roller BFN51 Belt with guide rib	80~400 Min.Step (5:mm)	400~3000	25 40 60	TA220 Single phase SA220 Three phase	IM Fix-speed motor SCM Speed adjustable motor INV VFD type	5 7.5 10 12.5 15 18 25 30 36 50 60 75 90 100 120 150 180 ⚠ When motor power is 6W gear box ratio can not be 5~10.		H3(Bright green) H9(Black) D(Black-ESD) D9(Blackish green-ESD) F(White-Food grade) Q2(Green-incline application) Y2(Yellow- Special type) R(Red- Special type)	GPG JSCC No motor
			25 40	DC24 DC TA220 Single phase	KMC Speed adjustable motor SWS Motor with drive				ZD No motor
			❹ Motor Series	❺ Control method	❻ Output torque	❼ Drive type			❾ Stepper motor brand
			57 series stepper motor	CM Open loop	23 26 31	MC Pulse type IO IO type EC IO typeEtherCAT RS RS485			S(Leadshine) No motor
			86 series stepper motor	CME Closed loop	45 80 120				❾ Servo motor brand
			❹ Inertia	❺ Voltage(V)	❻ Output power				S(Leadshine) X(Panasonic) No motor
			MH Servo motor	TA220 Single phase	400W 750W	⚠ Default type: pulse type			

※ Recommend motor brand JSCC

Model code example	Conveyor Model	Belt Width	Conveyor Length	Output Power	Voltage	Control Method	Ratio	Belt Type	Motor Brand
Speed adjustable motor	BFN01–	B200 –	L1000 –	25 –	TA220 –	SCM –	12.5 –	H3 –	G
Model code example	Conveyor Model	Belt Width	Conveyor Length	Motor series	Control Method	Output torque	Drive type	Belt Type	Motor Brand
Stepper motor	BFN51–	B200 –	L1000 –	57 –	CM –	23 –	MC –	H3 –	S
Model code example	Conveyor Model	Belt Width	Conveyor Length	Inertia	Voltage	Output power	Drive type	Belt Type	Motor Brand
Servo motor	BFN51–	B200 –	L1000 –	MH –	TA220 –	400W –	EC –	H3 –	X

Recommend belt width and conveyor length								
Model	B	L400 ≀ 500	L505 ≀ 600	L605 ≀ 700	L705 ≀ 800	L805 ≀ 900	L905 ≀ 3000
BFN01 BFN51	80~110	●	●	●	●	●	●
	115~160	●	●	●	●	●	●
	165~210	—	●	●	●	●	●
	215~310	—	—	●	●	●	●
	315~400	—	—	—	—	●	●

Conveyor Dimensions

Motor Specification : 40W ⟵ Motion Direction

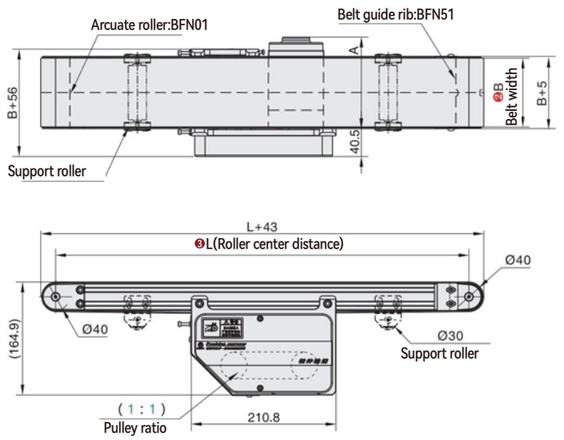

⚠ Above conveyor dimensions is basis on belt thickness H3(1.5mm).

Conveyor Profile Section

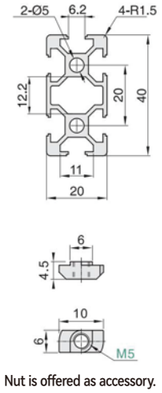

Nut is offered as accessory.

⚠ Nut specification inside aluminum profile slot:
Basis on L (Roller center distance)

400~999	1000~1499	1500~	Position	Spec	Status
16PCS	24PCS	32PCS	–	M5 (T Type)	Accessory
–	–	–	–	–	–

Conveyor speed and load capability

Form 1: Gear box ratio and conveyor speed(m/min)

Gear box radio	Fix-speed motor Speed(m/min)	Speed adjustable motor Speed(m/min)	Frequency motor Speed(m/min)	Brushless motor Speed(m/min)
5	42.4	25.4~42.4	52.8	0~94.2
7.5	28.3	17.0~28.3	35.2	0~62.8
10	21.2	12.7~21.2	26.4	0~47.1
12.5	17.0	10.2~17.0	21.1	0~37.7
15	14.1	8.5~14.1	17.6	0~31.4
18	11.8	7.1~11.8	14.7	0~26.2
25	8.5	5.1~8.5	10.6	0~18.8
30	7.1	4.2~7.1	8.8	0~15.7
36	5.9	3.5~5.9	7.3	0~13.1
50	4.2	2.5~4.2	5.3	0~9.4
60	3.5	2.1~3.5	4.4	0~7.9

Form 2: Pulse quality and conveyor speed(m/min)

Pulse quantity	Conveyor speed(m/min)	57 series stepper motor torque 2.3N.m	2.6N.m	3.1N.m	86 series stepper motor torque 4.5N.m	8.0N.m	12.0N.m	–
400	18.8	0~10.0	0~11.4	0~13.6	0~20.0	0~35.8	0~54.0	–
800	37.7	0~5.0	0~5.7	0~6.8	0~10.0	0~17.9	0~27.0	–
1600	75.4	0~2.5	0~2.8	0~3.4	0~5.0	0~9.0	0~13.5	–
3200	150.7	0~1.3	0~1.4	0~1.7	0~2.5	0~4.5	0~6.8	–
6400	301.4	0~0.6	0~0.7	0~0.9	0~1.2	0~2.2	0~3.4	–
12800	602.9	–	–	–	–	–	–	–
25600	1205.8	–	–	–	–	–	–	–
51200	2411.5	–	–	–	–	–	–	–

Instrument 1.Set the current as default 2.Set the code on motor drive
3.Default torque can be modified by current setting.

⚠ Test Condition:B=200 L=1000

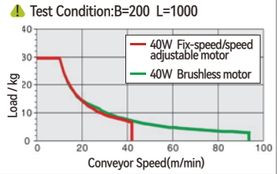

⚠ Speed calculation formula

1.Drive roller diameter D=50mm
2.Speed adjustable motor RPM=1350r/min
3.Frequency motor RPM=1680r/min
4.Brushless motor RPM=3000r/min
5.Belt pulley ratio i2=1:1

$$S=\frac{D\times\pi\times R\times i2}{i1\times1000}$$

$$S=\frac{50\times3.14\times1350\times1}{12.5\times1000}$$

S= 16.956m/min

⚠ Test Condition:B=200 L=1000 Current:5A

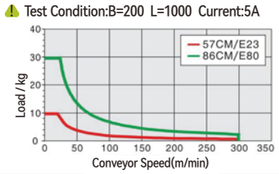

⚠ Speed calculation formula

1.Drive roller diameter D=50mm
2.Pulse quantity=400
3.Stepper motor angle J=1.8°
4.Belt pulley ratio i2=1:1

$$S=\frac{D\times\pi\times(M\times J/360\times60)\times i_2}{1000}$$

$$S=\frac{50\times3.14\times(400\times1.8/360\times60)\times1}{1000}$$

S= 18.84m/min

⚠ Conveyor speed and load capability are for reference, the data is measured by testing under specific conditions.

Belt Specification

Underlying Parameter			
• Material:Pvc • Thickness:1.5mm • Color:Bright green • Character:General	• Material:Pvc • Thickness:2.0mm • Color:Black • Character:General	• Material:PU • Thickness:0.8mm • Color:Black • Character:ESD	• Material:PU • Thickness:1.0mm • Color:Blackish green • Character:ESD
H3	H9	D	D9
Underlying Parameter			
• Material:PU • Thickness:1.2mm • Color:White • Character:Food grade	• Material:PU • Thickness:1mm • Color:Green • Character:Incline	• Material:Pvc • Thickness:1.2mm • Color:Yellow • Character:Special	• Material:Pvc • Thickness:1.2mm • Color:Red • Character:Special
F	Q2	Y2	R

Conveyor solution for product testing

Product Application Case

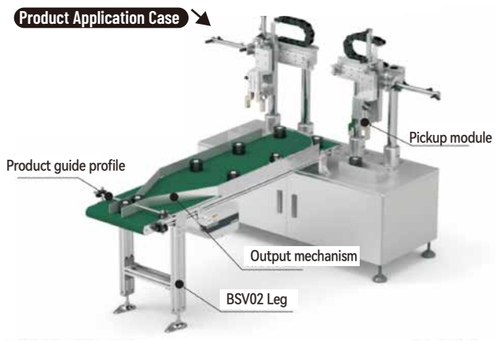

Three Slots Aluminum Profilee



Conveyor Features

Stable and precision conveyor with
strong structure for medium load application.

Conveyor Dimensions

Motor Specification: 25W ← Motion Direction

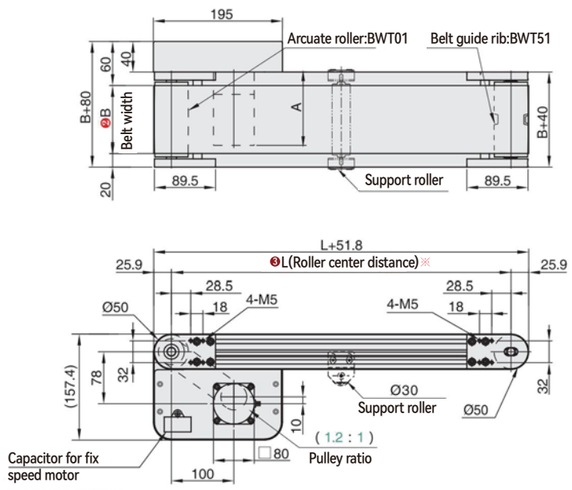

⚠ Above conveyor dimensions is basis on belt thickness H(0.9mm).

Conveyor Profile Section

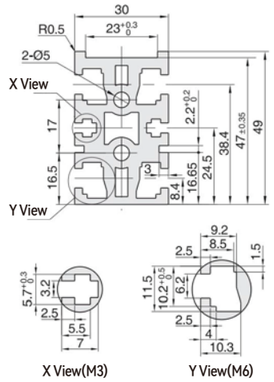

⚠ Nut installing



⚠ Nut specification inside aluminum profile slot:
Basis on L (Roller center distance)

240~999	1000~1499	1500~	Position	Spec	Status
4PCS	6PCS	8PCS	X View	M3 (hexagonal)	Accessory
4PCS	6PCS	8PCS	Y View	M6(square)	Accessory

Conveyor speed and load capability

Form 1: Gear box ratio and conveyor speed(m/min)

Gear box radio	Fix-speed motor Speed(m/min)	Speed adjustable motor Speed(m/min)	Frequency motor Speed(m/min)	Brushless motor Speed(m/min)
5	50.9	30.5~50.9	63.3	0~113.0
7.5	33.9	20.3~33.9	42.2	0~75.4
10	25.4	15.3~25.4	31.7	0~56.5
12.5	20.3	12.2~20.3	25.3	0~45.2
15	17.0	10.2~17.0	21.1	0~37.7
18	14.1	8.5~14.1	17.6	0~31.4
25	10.2	6.1~10.2	12.7	0~22.6
30	8.5	5.1~8.5	10.6	0~18.8
36	7.1	4.2~7.1	8.8	0~15.7
50	5.1	3.1~5.1	6.3	0~11.3
60	4.2	2.5~4.2	5.3	0~9.4

Form 2: Pulse quality and conveyor speed(m/min)

Pulse quantity	Conveyor speed(m/min)	–	–	–	86 series stepper motor torque 4.5N.m	8.0N.m	12.0N.m	–
400	22.6	–	–	–	0~13.8	0~24.8	0~37.4	–
800	45.2	–	–	–	0~6.9	0~12.4	0~18.7	–
1600	90.4	–	–	–	0~3.5	0~6.2	0~9.4	–
3200	180.9	–	–	–	0~1.7	0~3.1	0~4.7	–
6400	361.7	–	–	–	0~0.9	0~1.6	0~2.3	–
12800	723.5	–	–	–	–	–	–	–
25600	1446.9	–	–	–	–	–	–	–
51200	2893.8	–	–	–	–	–	–	–

Instrument 1.Set the current as default 2.Set the code on motor drive
3.Default torque can be modified by current setting.

⚠ Test Condition:B=200 L=1000

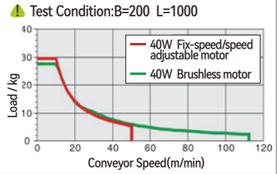

⚠ Speed calculation formula

1.Drive roller diameter D=50mm
2.Speed adjustable motor RPM=1350r/min
3.Frequency motor RPM=1680r/min
4.Brushless motor RPM=3000r/min
5.Belt pulley ratio i2=1.2:1

$$S=\frac{D\times\pi\times R\times i2}{i1\times1000}$$

$$S=\frac{50\times3.14\times1350\times1.2}{12.5\times1000}$$

S=20.3472m/min

⚠ Test Condition:B=200 L=1000 Current:5A

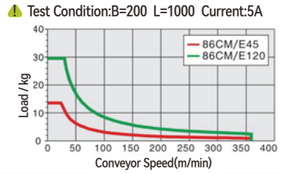

⚠ Speed calculation formula

1.Drive roller diameter D=50mm
2.Pulse quantity=400
3.Stepper motor angle J=1.8°
4.Belt pulley ratio i2=1.2:1

$$S=\frac{D\times\pi\times(M\times J/360\times60)\times i_2}{1000}$$

$$S=\frac{50\times3.14\times(400\times1.8/360\times60)\times1.2}{1000}$$

S=22.608m/min

⚠ Conveyor speed and load capability are for reference, the data is measured by testing under specific conditions.

※ Please do not exceed the allowed conveyor load and length. Belt thickness should be smaller than 2.0mm due to belt roller diameter.

Series Code	Type	※ Conveyor Features: Application Features	Motion Features	Material: Aluminum Profile	Motor Cover	Pulley Mounting Board	Surface Treatment: Aluminum Profile	Motor Cover	Pulley Mounting Board
BWT01	Arcuate roller to avoid belt shift	Belt with good flatness	One-way transfer	Alloy			Surface electrophoresis	Painting	
BWT51	Belt guide rib to avoid belt shift	Belt runs stable, but guide rib may be slight protrusion.	Forward/Reverse transfer						

Model ❶ Series Code	❷B-Belt Width	❸L-Conveyor Length 5mm	Motor Options ❹ Output Power(W)	❺ Voltage(V)	❻ Motor Type	❼ Gear box ratio	❽ Belt Spec	❾ Motor Brand
BWT01 Arcuate roller BWT51 Belt with guide rib	50~400 Min.Step (5:mm)	240~3000	25 40 60 90	TA220 Single phase SA220 Three phase	IM Fix-speed motor SCM Speed adjustable motor INV VFD type	5 7.5 10 12.5 15 18 25 30 36 50 60 75 90 100 120 150 180 ⚠ When motor power is 6W gear box ratio can not be 5~10.	H(Bright green) H6(Bright green) D(Black-ESD) D9(Blackish green-ESD) F(White-Food grade) Q2(Green-incline application) Y1(Yellow- Special type) R1(Red- Special type)	GPG JSCC No motor
			40 60	DC24 DC TA220 Single phase	KMC Speed adjustable motor SWS Motor with drive			ZD No motor
			❹ Motor Series	❺ Control method	❻ Output torque	❼ Drive type		❾ Stepper motor brand
			86 series stepper motor	CM Open loop CME Closed loop	45 80 120	MC Pulse type IO IO type EC IO typeEtherCAT RS RS485 ⚠ Default type: pulse type		S(Leadshine) No motor
			❹ Inertia	❺ Voltage(V)	❻ Output power			❾ Servo motor brand
			MH Servo motor	TA220 Single phase	400W 750W			S(Leadshine) X(Panasonic) No motor

※ Recommend motor brand JSCC

Model code example	Conveyor Model	Belt Width	Conveyor Length	Output Power	Voltage	Control Method	Ratio	Belt Type	Motor Brand
Speed adjustable motor	BWT01–	B200 –	L1000 –	25 –	TA220 –	SCM –	12.5 –	H –	G
Model code example	Conveyor Model	Belt Width	Conveyor Length	Motor series	Control Method	Output torque	Drive type	Belt Type	Motor Brand
Stepper motor	BWT51–	B200 –	L1000 –	86 –	CM –	45 –	MC –	H –	S
Model code example	Conveyor Model	Belt Width	Conveyor Length	Inertia	Voltage	Output power	Drive type	Belt Type	Motor Brand
Servo motor	BWT51–	B200 –	L1000 –	MH –	TA220 –	400W –	EC –	H –	X

Recommend belt width and conveyor length

Model	B	L240 ≀ 300	L305 ≀ 500	L505 ≀ 600	L605 ≀ 800	L805 ≀ 900	L905 ≀ 3000
BWT01 BWT51	50~110	●	●	●	●	●	●
	115~160	—	●	●	●	●	●
	165~210	—	—	●	●	●	●
	215~260	—	—	—	—	●	●
	265~400	—	—	—	—	—	●

Belt Specification

Underlying Parameter			
• Material:Pvc • Thickness:0.9mm • Color:Bright green • Character:General	• Material:Pvc • Thickness:0.9mm • ColorBright green • Character:General	• Material:PU • Thickness:0.8mm • Color:Black • Character:ESD	• Material:PU • Thickness:1.0mm • Color:Blackish green • Character:ESD
H	H6	D	D9
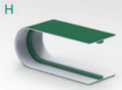	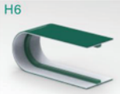	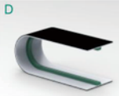	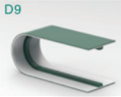
Underlying Parameter			
• Material:PU • Thickness:1.2mm • Color:White • Character:Food grade	• Material:PU • Thickness:1mm • Color:Green • Character:Incline	• Material:Pvc • Thickness:2.0mm • Color:Yellow • Character:Special	• Material:Pvc • Thickness:2.0mm • Color:Red • Character:Special
F	Q2	Y1	R1
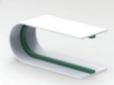		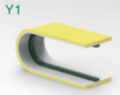	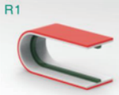

Conveyor solution for product levelling and printing

Product Application Case

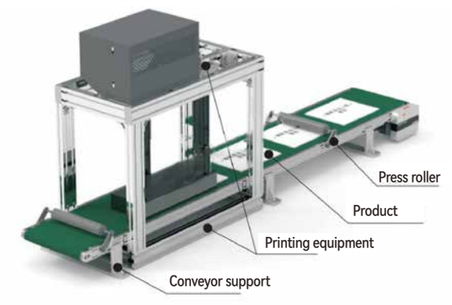

Three Slots Aluminum Profilee



Conveyor Features

Stable and precision conveyor with
strong structure for medium load application.

Conveyor Dimensions

Motor Specification: 25W ← Motion Direction

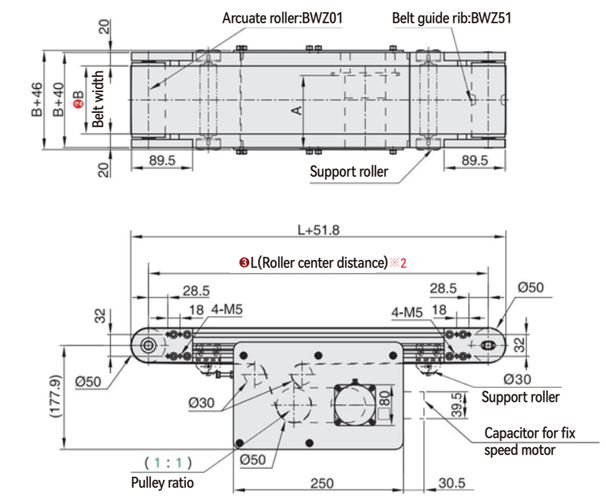

⚠ Above conveyor dimensions is basis on belt thickness H(0.9mm).

Conveyor Profile Section

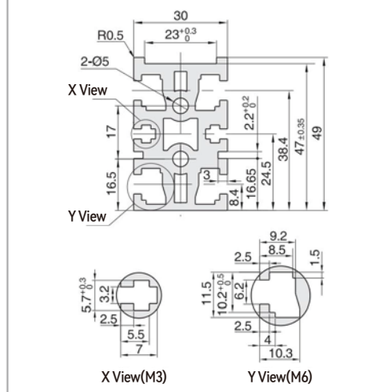

⚠ Nut installing



⚠ Nut specification inside aluminum profile slot:
Basis on L (Roller center distance)

385~999	1000~1499	1500~	Position	Spec	Status
4PCS	6PCS	8PCS	X View	M3 (hexagonal)	Accessory
4PCS	6PCS	8PCS	Y View	M6(square)	Accessory

Conveyor speed and load capability

Form 1: Gear box ratio and conveyor speed(m/min)

Gear box radio	Fix-speed motor Speed(m/min)	Speed adjustable motor Speed(m/min)	Frequency motor Speed(m/min)	Brushless motor Speed(m/min)
5	42.4	25.4~42.4	52.8	0~94.2
7.5	28.3	17.0~28.3	35.2	0~62.8
10	21.2	12.7~21.2	26.4	0~47.1
12.5	17.0	10.2~17.0	21.1	0~37.7
15	14.1	8.5~14.1	17.6	0~31.4
18	11.8	7.1~11.8	14.7	0~26.2
25	8.5	5.1~8.5	10.6	0~18.8
30	7.1	4.2~7.1	8.8	0~15.7
36	5.9	3.5~5.9	7.3	0~13.1
50	4.2	2.5~4.2	5.3	0~9.4
60	3.5	2.1~3.5	4.4	0~7.9

Form 2: Pulse quality and conveyor speed(m/min)

Pulse quantity	Conveyor speed(m/min)	–	–	–	86 series stepper motor torque 4.5N.m	8.0N.m	12.0N.m	–
400	18.8	–	–	–	0~20.0	0~35.8	0~54.0	–
800	37.7	–	–	–	0~10.0	0~17.9	0~27.0	–
1600	75.4	–	–	–	0~5.0	0~9.0	0~13.5	–
3200	150.7	–	–	–	0~2.5	0~4.5	0~6.8	–
6400	301.4	–	–	–	0~1.2	0~2.2	0~3.4	–
12800	602.9	–	–	–	–	–	–	–
25600	1205.8	–	–	–	–	–	–	–
51200	2411.5	–	–	–	–	–	–	–

Instrument 1.Set the current as default 2.Set the code on motor drive
3.Default torque can be modified by current setting.

⚠ Test Condition:B=200 L=1000

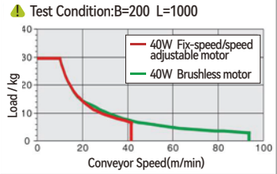

⚠ Speed calculation formula

1.Drive roller diameter D=50mm
2.Speed adjustable motor RPM=1350r/min
3.Frequency motor RPM=1680r/min
4.Brushless motor RPM=3000r/min
5.Belt pulley ratio i2=1:1

$$S=\frac{D\times\pi\times R\times i2}{i1\times1000}$$

$$S=\frac{50\times3.14\times1350\times1}{12.5\times1000}$$

S= 16.956m/min

⚠ Test Condition:B=200 L=1000 Current:5A

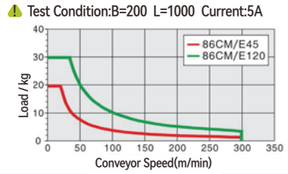

⚠ Speed calculation formula

1.Drive roller diameter D=50mm
2.Pulse quantity=400
3.Stepper motor angle J=1.8°
4.Belt pulley ratio i2=1:1

$$S=\frac{D\times\pi\times(M\times J/360\times60)\times i_2}{1000}$$

$$S=\frac{50\times3.14\times(400\times1.8/360\times60)\times1}{1000}$$

S= 18.84m/min

⚠ Conveyor speed and load capability are for reference, the data is measured by testing under specific conditions.

※ Please do not exceed the allowed conveyor load and length. Belt thickness should be smaller than 2.0mm due to belt roller diameter.

Series Code	Type	※ Conveyor Features		Material			Surface Treatment		
		Application Features	Motion Features	Aluminum Profile	Motor Cover	Pulley Mounting Board	Aluminum Profile	Motor Cover	Pulley Mounting Board
BWZ01	Arcuate roller to avoid belt shift	Belt with good flatness	One-way transfer	Alloy			Surface electrophoresis	Painting	
BWZ51	Belt guide rib to avoid belt shift	Belt runs stable, but guide rib may be slight protrusion.	Forward/Reverse transfer						

Model ❶ Series Code	❷B-Belt Width	❸L-Conveyor Length 5mm	Motor Options				❽ Belt Spec	❾ Motor Brand
			❹ Output Power(W)	❺ Voltage(V)	❻ Motor Type	❼ Gear box ratio		
BWZ01 Arcuate roller BWZ51 Belt with guide rib	50~400 Min.Step (5:mm)	385~3000	25 40 60 90	TA220 Single phase SA220 Three phase	IM Fix-speed motor SCM Speed adjustable motor INV VFD type	5 7.5 10 12.5 15 18 25 30 36 50 60 75 90 100 120 150 180 ⚠ When motor power is 6W gear box ratio can not be 5~10.	H(Bright green) H6(Bright green) D(Black-ESD) D9(Blackish green-ESD) F(White-Food grade) Q2(Green-incline application) Y1(Yellow- Special type) R1(Red- Special type)	GPG JSCC No motor
			40 60	DC24 DC TA220 Single phase	KMC Speed adjustable motor SWS Motor with drive			ZD No motor
			❹ Motor Series	❺ Control method	❻ Output torque	❼ Drive type		❾ Stepper motor brand
			86 series stepper motor	CM Open loop CME Closed loop	45 80 120	MC Pulse type IO IO type EC IO typeEtherCAT RS RS485 ⚠ Default type: pulse type		S(Leadshine) No motor
			❹ Inertia	❺ Voltage(V)	❻ Output power			❾ Servo motor brand
			MH Servo motor	TA220 Single phase	400W 750W			S(Leadshine) X(Panasonic) No motor

※ Recommend motor brand JSCC

Model code example	Conveyor Model	Belt Width	Conveyor Length	Output Power	Voltage	Control Method	Ratio	Belt Type	Motor Brand
Speed adjustable motor	BWZ01–	B200 –	L1000 –	25 –	TA220 –	SCM –	12.5 –	H –	G
Model code example	Conveyor Model	Belt Width	Conveyor Length	Motor series	Control Method	Output torque	Drive type	Belt Type	Motor Brand
Stepper motor	BWZ51–	B200 –	L1000 –	86 –	CM –	45 –	MC –	H –	S
Model code example	Conveyor Model	Belt Width	Conveyor Length	Inertia	Voltage	Output power	Drive type	Belt Type	Motor Brand
Servo motor	BWZ51–	B200 –	L1000 –	MH –	TA220 –	400W –	EC –	H –	X

Recommend belt width and conveyor length

Model	B	L385~500	L505~600	L605~700	L705~800	L805~900	L905~3000
BWZ01 BWZ51	50~110	●	●	●	●	●	●
	115~160	●	●	●	●	●	●
	165~210	—	●	●	●	●	●
	215~260	—	—	●	●	●	●
	265~400	—	—	—	●	●	●

Belt Specification

Underlying Parameter			
• Material:Pvc • Thickness:0.9mm • Color:Bright green • Character:General	• Material:Pvc • Thickness:0.9mm • ColorBright green • Character:General	• Material:PU • Thickness:0.8mm • Color:Black • Character:ESD	• Material:PU • Thickness:1.0mm • Color:Blackish green • Character:ESD
H	H6	D	D9
Underlying Parameter			
• Material:PU • Thickness:1.2mm • Color:White • Character:Food grade	• Material:PU • Thickness:1mm • Color:Green • Character:Incline	• Material:Pvc • Thickness:2.0mm • Color:Yellow • Character:Special	• Material:Pvc • Thickness:2.0mm • Color:Red • Character:Special
F	Q2	Y1	R1

Conveyor solution for multiple work stations

Product Application Case

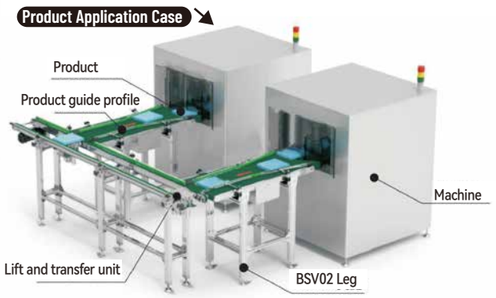

Three Slots Aluminum Profilee



Conveyor Features

Stable and precision conveyor with
strong structure for medium load application.

※ Please do not exceed the allowed conveyor load and length. Belt thickness should be smaller than 2.0mm due to belt roller diameter.

Series Code	Type	※ Conveyor Features		Material			Surface Treatment		
		Application Features	Motion Features	Aluminum Profile	Motor Cover	Pulley Mounting Board	Aluminum Profile	Motor Cover	Pulley Mounting Board
BWC01	Arcuate roller to avoid belt shift	Belt with good flatness	One-way transfer	Alloy			Surface electrophoresis	Painting	
BWC51	Belt guide rib to avoid belt shift	Belt runs stable, but guide rib may be slight protrusion.	Forward/Reverse transfer						

Model		❸L-Conveyor Length 5mm	Motor Options				❽ Belt Spec	❾ Motor Brand
❶ Series Code	❷B-Belt Width		❹ Output Power(W)	❺ Voltage(V)	❻ Motor Type	❼ Gear box ratio		
BWC01 Arcuate roller BWC51 Belt with guide rib	50~400 Min.Step (5mm)	385~3000	25 40 60 90	TA220 Single phase SA220 Three phase	IM Fix-speed motor SCM Speed adjustable motor INV VFD type	5 7.5 10 12.5 15 18 25 30 36 50 60 75 90 100 120 150 180 ⚠ When motor power is 6W gear box ratio can not be 5~10.	H(Bright green) H6(Bright green) D(Black-ESD) D9(Blackish green-ESD) F(White-Food grade) Q2(Green-incline application) Y1(Yellow- Special type) R1(Red- Special type)	GPG JSCC No motor
			40 60	DC24 DC TA220 Single phase	KMC Speed adjustable motor SWS Motor with drive			ZD No motor
			❹ Motor Series	❺ Control method	❻ Output torque	❼ Drive type		❾ Stepper motor brand
			86 series stepper motor	CM Open loop CME Closed loop	45 80 120	MC Pulse type IO IO type EC IO typeEtherCAT RS RS485 ⚠ Default type: pulse type		S(Leadshine) No motor
			❹ Inertia	❺ Voltage(V)	❻ Output power			❾ Servo motor brand
			MH Servo motor	TA220 Single phase	400W 750W			S(Leadshine) X(Panasonic) No motor

※ Recommend motor brand JSCC

Model code example										
"—"	Conveyor Model	Belt Width	Conveyor Length	Output Power	Voltage	Control Method	Ratio	Belt Type	Motor Brand	
Speed adjustable motor	BWC01–	B200	– L1000	– 25	– TA220	– SCM	– 12.5	– H	– G	
"—"	Conveyor Model	Belt Width	Conveyor Length	Motor series	Control Method	Output torque	Drive type	Belt Type	Motor Brand	
Stepper motor	BWC51–	B200	– L1000	– 86	– CM	– 45	– MC	– H	– S	
"—"	Conveyor Model	Belt Width	Conveyor Length	Inertia	Voltage	Output power	Drive type	Belt Type	Motor Brand	
Servo motor	BWC51–	B200	– L1000	– MH	– TA220	– 400W	– EC	– H	– X	

Recommend belt width and conveyor length							
Model	B	L385 ≀ 500	L505 ≀ 600	L605 ≀ 700	L605 ≀ 700	L705 ≀ 800	L805 ≀ 3000
BWC01 BWC51	50~110	●	●	●	●	●	●
	115~160	●	●	●	●	●	●
	165~210	—	●	●	●	●	●
	215~260	—	—	●	●	●	●
	265~400	—	—	—	●	●	●

Conveyor Dimensions

Motor Specification : 25W ⟵ Motion Direction

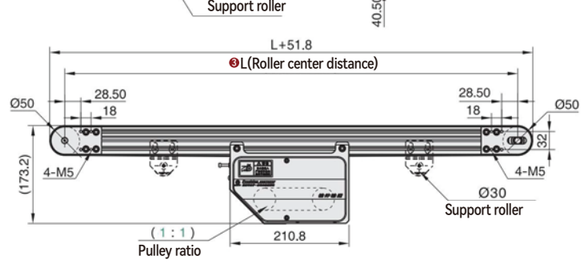

⚠ Above conveyor dimensions is basis on belt thickness H(0.9mm).

Conveyor Profile Section

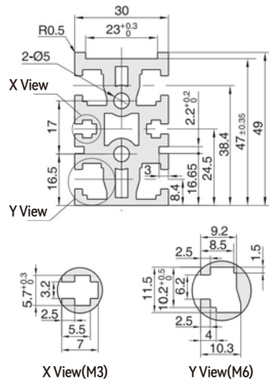

⚠ Nut installing



⚠ Nut specification inside aluminum profile slot:
Basis on L (Roller center distance)

385~999	1000~1499	1500~	Position	Spec	Status
4PCS	6PCS	8PCS	X View	M3 (hexagonal)	Accessory
4PCS	6PCS	8PCS	Y View	M6(square)	Accessory

Conveyor speed and load capability

Form 1: Gear box ratio and conveyor speed(m/min)

Gear box radio	Fix-speed motor Speed(m/min)	Speed adjustable motor Speed(m/min)	Frequency motor Speed(m/min)	Brushless motor Speed(m/min)
5	42.4	25.4~42.4	52.8	0~94.2
7.5	28.3	17.0~28.3	35.2	0~62.8
10	21.2	12.7~21.2	26.4	0~47.1
12.5	17.0	10.2~17.0	21.1	0~37.7
15	14.1	8.5~14.1	17.6	0~31.4
18	11.8	7.1~11.8	14.7	0~26.2
25	8.5	5.1~8.5	10.6	0~18.8
30	7.1	4.2~7.1	8.8	0~15.7
36	5.9	3.5~5.9	7.3	0~13.1
50	4.2	2.5~4.2	5.3	0~9.4
60	3.5	2.1~3.5	4.4	0~7.9

⚠ Test Condition:B=200 L=1000

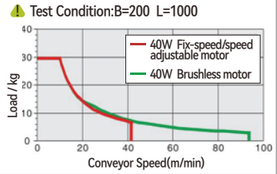

⚠ Speed calculation formula

1.Drive roller diameter D=50mm
2.Speed adjustable motor RPM=1350r/min
3.Frequency motor RPM=1680r/min
4.Brushless motor RPM=3000r/min
5.Belt pulley ratio i2=1:1

$$S=\frac{D\times\pi\times R\times i2}{i1\times1000}$$

$$S=\frac{50\times3.14\times1350\times1}{12.5\times1000}$$

S= 16.956m/min

Form 2: Pulse quality and conveyor speed(m/min)

Pulse quantity	Conveyor speed(m/min)	—	—	—	86 series stepper motor torque 4.5N.m	8.0N.m	12.0N.m	—
400	18.8	—	—	—	0~20.0	0~35.8	0~54.0	—
800	37.7	—	—	—	0~10.0	0~17.9	0~27.0	—
1600	75.4	—	—	—	0~5.0	0~9.0	0~13.5	—
3200	150.7	—	—	—	0~2.5	0~4.5	0~6.8	—
6400	301.4	—	—	—	0~1.2	0~2.2	0~3.4	—
12800	602.9	—	—	—	—	—	—	—
25600	1205.8	—	—	—	—	—	—	—
51200	2411.5	—	—	—	—	—	—	—

Instrument 1.Set the current as default 2.Set the code on motor drive
3.Default torque can be modified by current setting.

⚠ Test Condition:B=200 L=1000 Current:5A

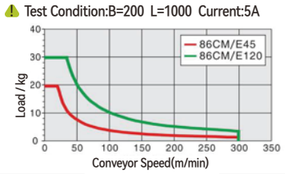

⚠ Speed calculation formula

1.Drive roller diameter D=50mm
2.Pulse quantity=400
3.Stepper motor angle J=1.8°
4.Belt pulley ratio i2=1:1

$$S=\frac{D\times\pi\times(M\times J/360\times60)\times i_2}{1000}$$

$$S=\frac{50\times3.14\times(400\times1.8/360\times60)\times1}{1000}$$

S= 18.84m/min

⚠ Conveyor speed and load capability are for reference, the data is measured by testing under specific conditions.

Belt Specification

Underlying Parameter			
• Material:Pvc • Thickness:0.9mm • Color:Bright green • Character:General	• Material:Pvc • Thickness:0.9mm • ColorBright green • Character:General	• Material:PU • Thickness:0.8mm • Color:Black • Character:ESD	• Material:PU • Thickness:1.0mm • Color:Blackish green • Character:ESD
H	H6	D	D9
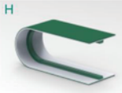	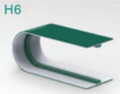	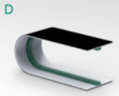	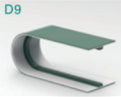
Underlying Parameter			
• Material:PU • Thickness:1.2mm • Color:White • Character:Food grade	• Material:PU • Thickness:1mm • Color:Green • Character:Incline	• Material:Pvc • Thickness:2.0mm • Color:Yellow • Character:Special	• Material:Pvc • Thickness:2.0mm • Color:Red • Character:Special
F	Q2	Y1	R1
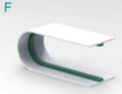		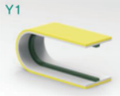	

Side by side conveyors for product sorting process

Product Application Case

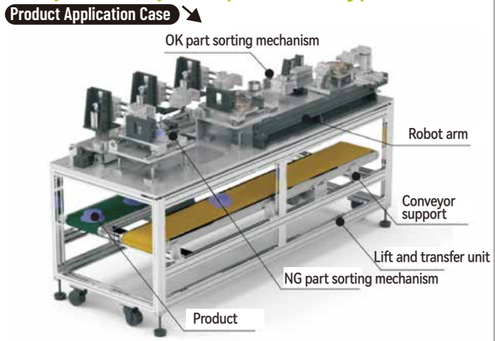

Three Slots Aluminum Profilee

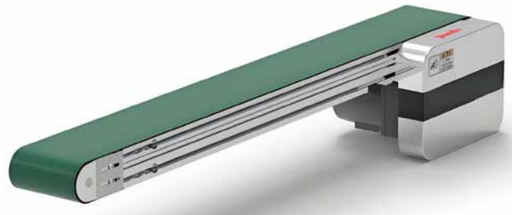

Conveyor Features

Conveyor with strong structure and stable performance for medium load and precision transferring application.

※ Please do not exceed the allowed conveyor load and length. Belt thickness should be smaller than 2.0mm due to belt roller diameter.

Series Code	Type	※ Conveyor Features		Material			Surface Treatment		
		Application Features	Motion Features	Aluminum Profile	Motor Cover	Pulley Mounting Board	Aluminum Profile	Motor Cover	Pulley Mounting Board
BWQ01	Arcuate roller to avoid belt shift	Belt with good flatness	One-way transfer	Alloy			Surface electrophoresis	Painting	
BWQ51	Belt guide rib to avoid belt shift	Belt runs stable, but guide rib may be slight protrusion.	Forward/Reverse transfer						

Model		❸L-Conveyor Length 5mm	Motor Options				❽ Belt Spec	❾ Motor Brand
❶ Series Code	❷B-Belt Width		❹ Output Power(W)	❺ Voltage(V)	❻ Motor Type	❼ Gear box ratio		
BWQ01 Arcuate roller BWQ51 Belt with guide rib	80~400 Min.Step (5mm)	320~3000	25 40 60 90	TA220 Single phase SA220 Three phase	IM Fix-speed motor SCM Speed adjustable motor INV VFD type	5 7.5 10 12.5 15 18 25 30 36 50 60 75 90 100 120 150 180 ⚠ When motor power is 6W gear box ratio can not be 5~10.	H(Bright green) H6(Bright green) D(Black-ESD) D9(Blackish green-ESD) F(White-Food grade) Q2(Green-incline application) Y1(Yellow- Special type) R1(Red- Special type)	GPG JSCC No motor
			40 60	DC24 DC TA220 Single phase	KMC Speed adjustable motor SWS Motor with drive			ZD No motor
			❹ Motor Series	❺ Control method	❻ Output torque	❼ Drive type		❾ Stepper motor brand
			86 series stepper motor	CM Open loop CME Closed loop	45 80 120	MC Pulse type IO IO type EC IO typeEtherCAT RS RS485 ⚠ Default type: pulse type		S(Leadshine) No motor
			❹ Inertia	❺ Voltage(V)	❻ Output power			❾ Servo motor brand
			MH Servo motor	TA220 Single phase	400W 750W			S(Leadshine) X(Panasonic) No motor

※ Recommend motor brand JSCC

Model code example	Conveyor Model	Belt Width	Conveyor Length	Output Power	Voltage	Control Method	Ratio	Belt Type	Motor Brand
Speed adjustable motor	BWQ01–	B200 –	L1000 –	25 –	TA220 –	SCM –	12.5 –	H –	G
Model code example	Conveyor Model	Belt Width	Conveyor Length	Motor series	Control Method	Output torque	Drive type	Belt Type	Motor Brand
Stepper motor	BWQ51–	B200 –	L1000 –	86 –	CM –	45 –	MC –	H –	S
Model code example	Conveyor Model	Belt Width	Conveyor Length	Inertia	Voltage	Output power	Drive type	Belt Type	Motor Brand
Servo motor	BWQ51–	B200 –	L1000 –	MH –	TA220 –	400W –	EC –	H –	X

Recommend belt width and conveyor length

Model	B	L320 ≀ 500	L505 ≀ 600	L605 ≀ 700	L705 ≀ 800	L805 ≀ 900	L905 ≀ 3000
BWQ01 BWQ51	80~110	●	●	●	●	●	●
	115~160	—	●	●	●	●	●
	165~210	—	—	●	●	●	●
	215~260	—	—	—	—	●	●
	265~400	—	—	—	—	—	●

Conveyor Dimensions

Motor Specification : 40W ⟵ Motion Direction

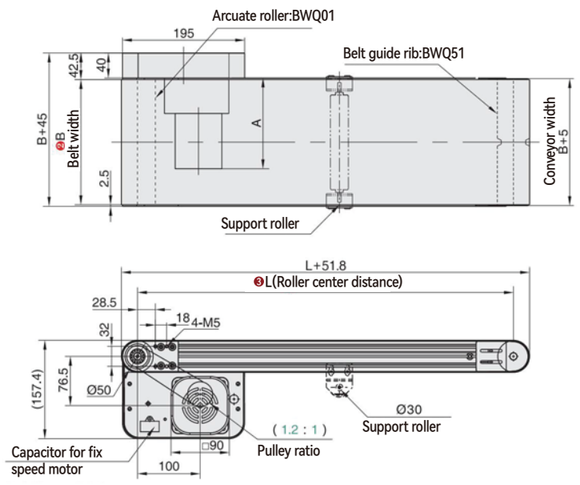

⚠ Above conveyor dimensions is basis on belt thickness H(0.9mm).

Conveyor Profile Section

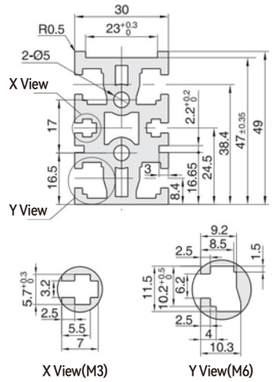

⚠ Nut installing



⚠ Nut specification inside aluminum profile slot:
Basis on L (Roller center distance)

320~999	1000~1499	1500~	Position	Spec	Status
4PCS	6PCS	8PCS	X View	M3 (hexagonal)	Accessory
4PCS	6PCS	8PCS	Y View	M6(square)	Accessory

Conveyor speed and load capability

Form 1: Gear box ratio and conveyor speed(m/min)

Gear box radio	Fix-speed motor Speed(m/min)	Speed adjustable motor Speed(m/min)	Frequency motor Speed(m/min)	Brushless motor Speed(m/min)
5	50.9	30.5~50.9	63.3	0~113.0
7.5	33.9	20.3~33.9	42.2	0~75.4
10	25.4	15.3~25.4	31.7	0~56.5
12.5	20.3	12.2~20.3	25.3	0~45.2
15	17.0	10.2~17.0	21.1	0~37.7
18	14.1	8.5~14.1	17.6	0~31.4
25	10.2	6.1~10.2	12.7	0~22.6
30	8.5	5.1~8.5	10.6	0~18.8
36	7.1	4.2~7.1	8.8	0~15.7
50	5.1	3.1~5.1	6.3	0~11.3
60	4.2	2.5~4.2	5.3	0~9.4

Form 2: Pulse quality and conveyor speed(m/min)

Pulse quantity	Conveyor speed(m/min)	–	–	–	86 series stepper motor torque 4.5N.m	8.0N.m	12.0N.m	–
400	22.6	–	–	–	0~13.8	0~24.8	0~37.4	–
800	45.2	–	–	–	0~6.9	0~12.4	0~18.7	–
1600	90.4	–	–	–	0~3.5	0~6.2	0~9.4	–
3200	180.9	–	–	–	0~1.7	0~3.1	0~4.7	–
6400	361.7	–	–	–	0~0.9	0~1.6	0~2.3	–
12800	723.5	–	–	–	–	–	–	–
25600	1446.9	–	–	–	–	–	–	–
51200	2893.8	–	–	–	–	–	–	–

Instrument 1.Set the current as default 2.Set the code on motor drive
3.Default torque can be modified by current setting.

⚠ Test Condition:B=200 L=1000

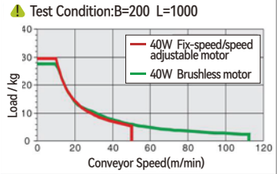

⚠ Speed calculation formula

1.Drive roller diameter D=50mm
2.Speed adjustable motor RPM=1350r/min
3.Frequency motor RPM=1680r/min
4.Brushless motor RPM=3000r/min
5.Belt pulley ratio i2=1.2:1

$$S=\frac{D\times\pi\times R\times i2}{i1\times1000}$$

$$S=\frac{50\times3.14\times1350\times1.2}{12.5\times1000}$$

S= 20.3472m/min

⚠ Test Condition:B=200 L=1000 Current:5A

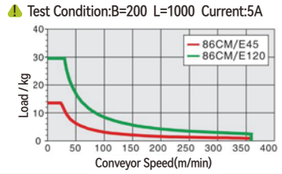

⚠ Speed calculation formula

1.Drive roller diameter D=50mm
2.Pulse quantity=400
3.Stepper motor angle J=1.8°
4.Belt pulley ratio i2=1.2:1

$$S=\frac{D\times\pi\times(M\times J/360\times60)\times i_2}{1000}$$

$$S=\frac{50\times3.14\times(400\times1.8/360\times60)\times1.2}{1000}$$

S=22.608m/min

⚠ Conveyor speed and load capability are for reference, the data is measured by testing under specific conditions.

Belt Specification

Underlying Parameter			
• Material:Pvc • Thickness:0.9mm • Color:Bright green • Character:General	• Material:Pvc • Thickness:0.9mm • ColorBright green • Character:General	• Material:PU • Thickness:0.8mm • Color:Black • Character:ESD	• Material:PU • Thickness:1.0mm • Color:Blackish green • Character:ESD
H	H6	D	D9
Underlying Parameter			
• Material:PU • Thickness:1.2mm • Color:White • Character:Food grade	• Material:PU • Thickness:1mm • Color:Green • Character:Incline	• Material:Pvc • Thickness:2.0mm • Color:Yellow • Character:Special	• Material:Pvc • Thickness:2.0mm • Color:Red • Character:Special
F	Q2	Y1	R1

Side by side conveyors for product sorting process

Product Application Case

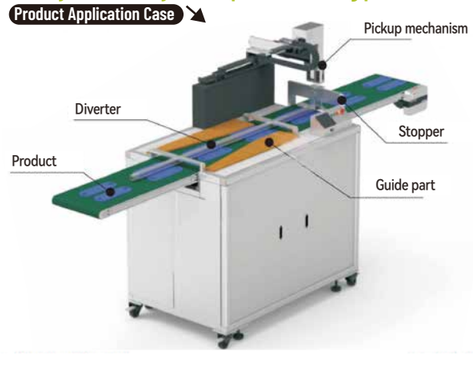

Three Slots Aluminum Profilee



Conveyor Features

Conveyor with strong structure and stable performance for medium load and precision transferring application.

※ Please do not exceed the allowed conveyor load and length. Belt thickness should be smaller than 2.0mm due to belt roller diameter.

Series Code	Type	※ Conveyor Features		Material			Surface Treatment		
		Application Features	Motion Features	Aluminum Profile	Motor Cover	Pulley Mounting Board	Aluminum Profile	Motor Cover	Pulley Mounting Board
BWN01	Arcuate roller to avoid belt shift	Belt with good flatness	One-way transfer	Alloy			Surface electrophoresis	Painting	
BWN51	Belt guide rib to avoid belt shift	Belt runs stable, but guide rib may be slight protrusion.	Forward/Reverse transfer						

Model		❸L-Conveyor Length 5mm	Motor Options				❽ Belt Spec	❾ Motor Brand
❶ Series Code	❷B-Belt Width		❹ Output Power(W)	❺ Voltage(V)	❻ Motor Type	❼ Gear box ratio		
BWN01 Arcuate roller BWN51 Belt with guide rib	80~400 Min.Step (5mm)	385~3000	25 40 60 90	TA220 Single phase	IM Fix-speed motor SCM Speed adjustable motor	5 7.5 10 12.5 15 18 25 30 36 50 60 75 90 100 120 150 180 ⚠ When motor power is 6W gear box ratio can not be 5~10.	H(Bright green) H6(Bright green) D(Black-ESD) D9(Blackish green-ESD) F(White-Food grade) Q2(Green-incline application) Y1(Yellow- Special type) R1(Red- Special type)	GPG JSCC No motor
				SA220 Three phase	INV VFD type			
			40 60	DC24 DC TA220 Single phase	KMC Speed adjustable motor SWS Motor with drive			ZD No motor
			❹ Motor Series	❺ Control method	❻ Output torque	❼ Drive type		❾ Stepper motor brand
			86 series stepper motor	CM Open loop CME Closed loop	45 80 120	MC Pulse type IO IO type EC IO typeEtherCAT RS RS485 ⚠ Default type: pulse type		S(Leadshine) No motor
			❹ Inertia	❺ Voltage(V)	❻ Output power			❾ Servo motor brand
			MH Servo motor	TA220 Single phase	400W 750W			S(Leadshine) X(Panasonic) No motor

※ Recommend motor brand JSCC

Model code example	Conveyor Model	Belt Width	Conveyor Length	Output Power	Voltage	Control Method	Ratio	Belt Type	Motor Brand
Speed adjustable motor	BWN01	B200	L1000	25	TA220	SCM	12.5	H	G
Model code example	Conveyor Model	Belt Width	Conveyor Length	Motor series	Control Method	Output torque	Drive type	Belt Type	Motor Brand
Stepper motor	BWN51	B200	L1000	86	CM	45	MC	H	S
Model code example	Conveyor Model	Belt Width	Conveyor Length	Inertia	Voltage	Output power	Drive type	Belt Type	Motor Brand
Servo motor	BWN51	B200	L1000	MH	TA220	400W	EC	H	X

Recommend belt width and conveyor length

Model	B	L385~500	L505~600	L605~700	L605~700	L705~800	L805~3000
BWN01 BWN51	80~110	●	●	●	●	●	●
	115~160	●	●	●	●	●	●
	165~210	—	●	●	●	●	●
	215~260	—	—	●	●	●	●
	265~400	—	—	—	●	●	●

Conveyor Dimensions

Motor Specification: 25W ⟵ Motion Direction

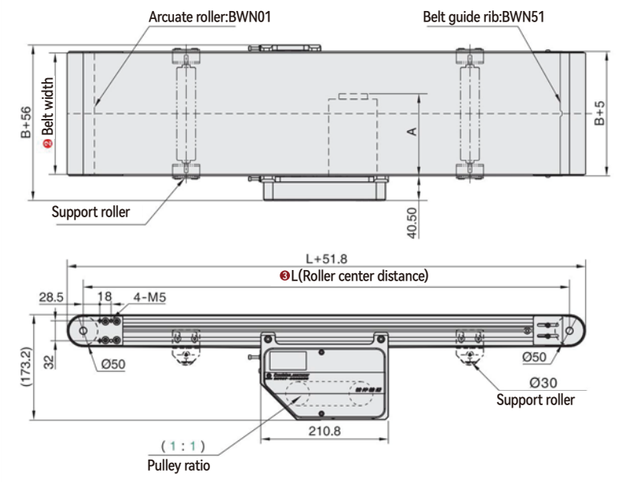

⚠ Above conveyor dimensions is basis on belt thickness H(0.9mm).

Conveyor Profile Section

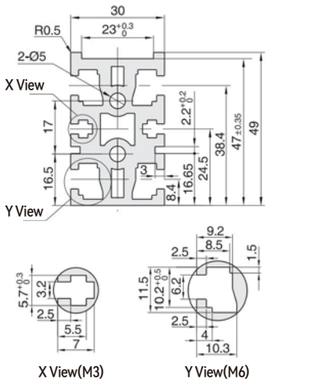

⚠ Nut installing



⚠ Nut specification inside aluminum profile slot:
Basis on L (Roller center distance)

385~999	1000~1499	1500~	Position	Spec	Status
4PCS	6PCS	8PCS	X View	M3 (hexagonal)	Accessory
4PCS	6PCS	8PCS	Y View	M6(square)	Accessory

Conveyor speed and load capability

Form 1: Gear box ratio and conveyor speed(m/min)

Gear box radio	Fix-speed motor Speed(m/min)	Speed adjustable motor Speed(m/min)	Frequency motor Speed(m/min)	Brushless motor Speed(m/min)
5	42.4	25.4~42.4	52.8	0~94.2
7.5	28.3	17.0~28.3	35.2	0~62.8
10	21.2	12.7~21.2	26.4	0~47.1
12.5	17.0	10.2~17.0	21.1	0~37.7
15	14.1	8.5~14.1	17.6	0~31.4
18	11.8	7.1~11.8	14.7	0~26.2
25	8.5	5.1~8.5	10.6	0~18.8
30	7.1	4.2~7.1	8.8	0~15.7
36	5.9	3.5~5.9	7.3	0~13.1
50	4.2	2.5~4.2	5.3	0~9.4
60	3.5	2.1~3.5	4.4	0~7.9

⚠ Test Condition:B=200 L=1000

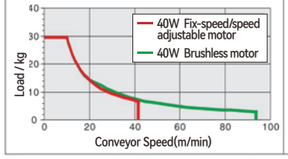

⚠ Speed calculation formula

1.Drive roller diameter D=50mm
2.Speed adjustable motor RPM=1350r/min
3.Frequency motor RPM=1680r/min
4.Brushless motor RPM=3000r/min
5.Belt pulley ratio i2=1:1

$$S=\frac{D\times\pi\times R\times i2}{i1\times1000}$$

$$S=\frac{50\times3.14\times1350\times1}{12.5\times1000}$$

S= 16.956m/min

Form 2: Pulse quality and conveyor speed(m/min)

Pulse quantity	Conveyor speed(m/min)	—	—	—	86 series stepper motor torque 4.5N.m	8.0N.m	12.0N.m	—
400	18.8	—	—	—	0~20.0	0~35.8	0~54.0	—
800	37.7	—	—	—	0~10.0	0~17.9	0~27.0	—
1600	75.4	—	—	—	0~5.0	0~9.0	0~13.5	—
3200	150.7	—	—	—	0~2.5	0~4.5	0~6.8	—
6400	301.4	—	—	—	0~1.2	0~2.2	0~3.4	—
12800	602.9	—	—	—	—	—	—	—
25600	1205.8	—	—	—	—	—	—	—
51200	2411.5	—	—	—	—	—	—	—

Instrument 1.Set the current as default 2.Set the code on motor drive
3.Default torque can be modified by current setting.

⚠ Test Condition:B=200 L=1000 Current:5A

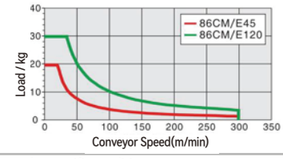

⚠ Speed calculation formula

1.Drive roller diameter D=50mm
2.Pulse quantity=400
3.Stepper motor angle J=1.8°
4.Belt pulley ratio i2=1:1

$$S=\frac{D\times\pi\times(M\times J/360\times60)\times i_2}{1000}$$

$$S=\frac{50\times3.14\times(400\times1.8/360\times60)\times1}{1000}$$

S= 18.84m/min

⚠ Conveyor speed and load capability are for reference, the data is measured by testing under specific conditions.

Belt Specification

Underlying Parameter			
• Material:Pvc • Thickness:0.9mm • Color:Bright green • Character:General	• Material:Pvc • Thickness:0.9mm • ColorBright green • Character:General	• Material:PU • Thickness:0.8mm • Color:Black • Character:ESD	• Material:PU • Thickness:1.0mm • Color:Blackish green • Character:ESD
H	H6	D	D9
Underlying Parameter			
• Material:PU • Thickness:1.2mm • Color:White • Character:Food grade	• Material:PU • Thickness:1mm • Color:Green • Character:Incline	• Material:Pvc • Thickness:2.0mm • Color:Yellow • Character:Special	• Material:Pvc • Thickness:2.0mm • Color:Red • Character:Special
F	Q2	Y1	R1

Conveyor for part feeding

Product Application Case

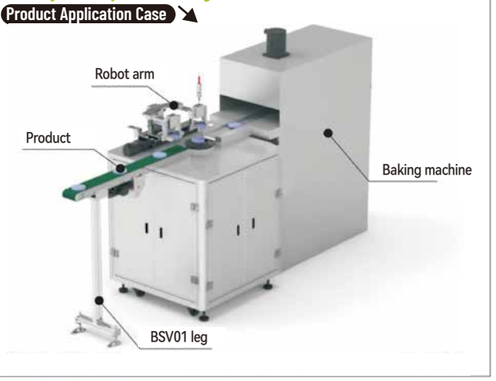

Three Slots Aluminum Profilee

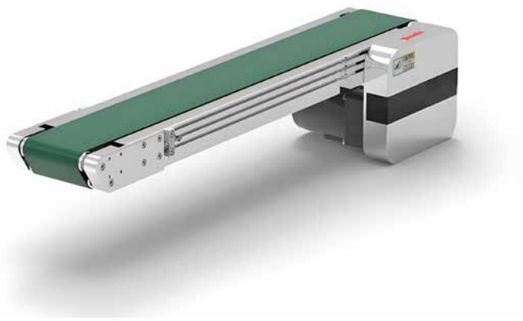

Conveyor Features

Conveyor with strong structure and stable performance for big load and precision transferring application.
Sharp end can reduce connection gap.

※ Please do not exceed the allowed conveyor load and length. Belt thickness should be smaller than 2.0mm due to belt roller diameter.

Series Code	Type	※ Conveyor Features		Material			Surface Treatment		
		Application Features	Motion Features	Aluminum Profile	Motor Cover	Pulley Mounting Board	Aluminum Profile	Motor Cover	Pulley Mounting Board
BGT01	Arcuate roller to avoid belt shift	Belt with good flatness	One-way transfer	Alloy			Surface electrophoresis	Painting	
BGT51	Belt guide rib to avoid belt shift	Belt runs stable, but guide rib may be slight protrusion.	Forward/Reverse transfer						

Model		❸L-Conveyor Length 5mm	Motor Options				❽ Belt Spec	❾ Motor Brand
❶ Series Code	❷B-Belt Width		❹ Output Power(W)	❺ Voltage(V)	❻ Motor Type	❼ Gear box ratio		
BGT01 Arcuate roller BGT51 Belt with guide rib	100 200 300 400 500	440~4000	60 90 120 200	TA220 Single phase SA220 Three phase	IM Fix-speed motor SCM Speed adjustable motor INV VFD type	5 7.5 10 12.5 15 18 25 30 36 50 60 75 90 100 120 150 180 ⚠ When motor power is 6W gear box ratio can not be 5~10.	H1(Blackish green-General) H2(Green-General) D7(Black-ESD) D10(Bright green-ESD) F(White-Food grade) W8(Blue-Anti slip) Y1(Yellow- Special type) R1(Red- Special type)	GPG JSCC No motor
			90 120	DC24 DC TA220 Single phase	KMC Speed adjustable motor SWS Motor with drive			ZD No motor
			❹ Motor Series	❺ Control method	❻ Output torque	❼ Drive type		❾ Stepper motor brand
			86 series stepper motor	CM Open loop CME Closed loop	45 80 120	MC Pulse type IO IO type EC IO typeEtherCAT RS RS485 ⚠ Default type: pulse type		S(Leadshine) No motor
			❹ Inertia	❺ Voltage(V)	❻ Output power			❾ Servo motor brand
			MH Servo motor	TA220 Single phase	750W			S(Leadshine) X(Panasonic) No motor

※ Recommend motor brand JSCC

Model code example	Conveyor Model	Belt Width	Conveyor Length	Output Power	Voltage	Control Method	Ratio	Belt Type	Motor Brand
Speed adjustable motor	BGT01–	B300 –	L1500 –	60 –	TA220 –	SCM –	12.5 –	H2 –	G
Model code example	Conveyor Model	Belt Width	Conveyor Length	Motor series	Control Method	Output torque	Drive type	Belt Type	Motor Brand
Stepper motor	BGT51–	B300 –	L1500 –	86 –	CM –	45 –	MC –	H2 –	S
Model code example	Conveyor Model	Belt Width	Conveyor Length	Inertia	Voltage	Output power	Drive type	Belt Type	Motor Brand
Servo motor	BGT51–	B300 –	L1500 –	MH –	TA220 –	750W –	EC –	H2 –	X

Recommend belt width and conveyor length

Model	B	L440 ≀ 1000	L1005 ≀ 1500	L1505 ≀ 2000	L2005 ≀ 2500	L2505 ≀ 3000	L3005 ≀ 4000
BGT01 BGT51	100	●	●	●	●	●	●
	200	●	●	●	●	●	●
	300	—	●	●	●	●	●
	400	—	—	—	●	●	●
	500	—	—	—	—	—	●

Conveyor Dimensions

Motor Specification : 60W ⟵ Motion Direction

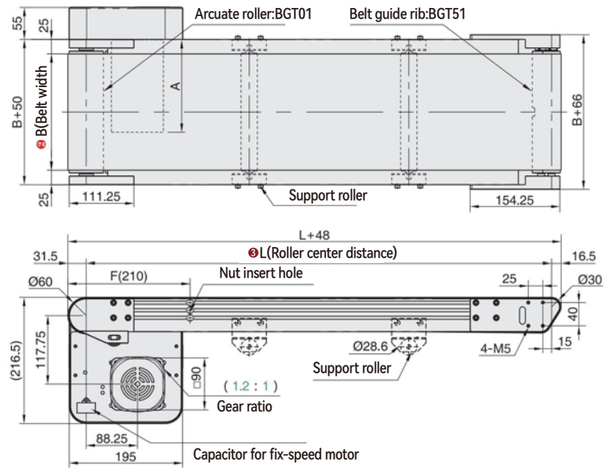

⚠ Above conveyor dimensions is basis on belt thickness H1(1.5mm).

Conveyor Profile Section

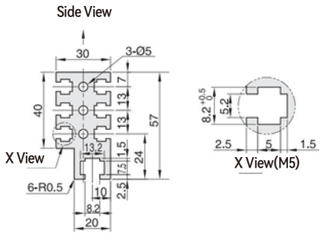

⚠ Nut specification inside aluminum profile slot:
Basis on L (Roller center distance)

440~999	1000~1499	1500~	Position	Spec	Status
4PCS	6PCS	8PCS	X View	M5(square)	Accessory
–	–	–	–	–	–

Conveyor speed and load capability

Form 1: Gear box ratio and conveyor speed(m/min)

Gear box radio	Fix-speed motor Speed(m/min)	Speed adjustable motor Speed(m/min)	Frequency motor Speed(m/min)	Brushless motor Speed(m/min)
5	58.0	34.8~58.0	72.2	0~128.9
7.5	38.7	23.2~38.7	48.1	0~85.9
10	29.0	17.4~29.0	36.1	0~64.4
12.5	23.2	13.9~23.2	28.9	0~51.5
15	19.3	11.6~19.3	24.1	0~43.0
18	16.1	9.7~16.1	20.0	0~35.8
25	11.6	7.0~11.6	14.4	0~25.8
30	9.7	5.8~9.7	12.0	0~21.5
36	8.1	4.8~8.1	10.0	0~17.9
50	5.8	3.5~5.8	7.2	0~12.9
60	4.8	2.9~4.8	6.0	0~10.7

⚠ Test Condition:B=300 L=1500

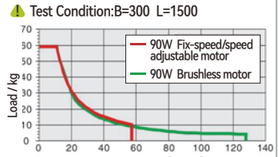

⚠ Speed calculation formula

1.Drive roller diameter D=57mm
2.Speed adjustable motor RPM=1350r/min
3.Frequency motor RPM=1680r/min
4.Brushless motor RPM=3000r/min
5.Belt pulley ratio i2=1.2:1

$$S=\frac{D\times\pi\times R\times i2}{i1\times1000}$$

$$S=\frac{57\times3.14\times1350\times1.2}{12.5\times1000}$$

S= 23.195808m/min

Form 2: Pulse quality and conveyor speed(m/min)

Pulse quantity	Conveyor speed(m/min)	–	–	–	86 series stepper motor torque 4.5N.m	8.0N.m	12.0N.m	–
400	25.8	–	–	–	0~11.6	0~21.3	0~32.4	–
800	51.5	–	–	–	0~5.8	0~10.7	0~16.2	–
1600	103.1	–	–	–	0~2.9	0~5.3	0~8.1	–
3200	206.2	–	–	–	0~1.5	0~2.7	0~4.0	–
6400	412.4	–	–	–	0~0.7	0~1.3	0~2.0	–
12800	824.7	–	–	–	–	–	–	–
25600	1649.5	–	–	–	–	–	–	–
51200	3299.0	–	–	–	–	–	–	–

Instrument 1.Set the current as default 2.Set the code on motor drive
3.Default torque can be modified by current setting.

⚠ Test Condition:B=300 L=1500 Current:5A

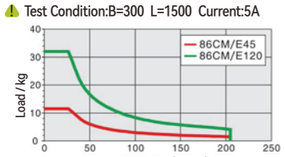

⚠ Speed calculation formula

1.Drive roller diameter D=57mm
2.Pulse quantity=400
3.Stepper motor angle J=1.8°
4.Belt pulley ratio i2=1.2:1

$$S=\frac{D\times\pi\times(M\times J/360\times60)\times i_2}{1000}$$

$$S=\frac{57\times3.14\times(400\times1.8/360\times60)\times1.2}{1000}$$

S= 25.77312m/min

⚠ Conveyor speed and load capability are for reference, the data is measured by testing under specific conditions.

Belt Specification

Underlying Parameter			
• Material:PU • Thickness:1.5mm • Color:Blackish green • Character:General	• Material:PVC • Thickness:2.0mm • ColorBright green • Character:General	• Material:PU • Thickness:1.5mm • Color:Black • Character:ESD	• Material:PVC • Thickness:2.0mm • Color:Bright green • Character:ESD
H1	H2	D7	D10
Underlying Parameter			
• Material:PU • Thickness:1.2mm • Color:White • Character:Food grade	• Material:PU • Thickness:1.8mm • Color:Blue • Character:Anti slip	•Material:PVC •Thickness:2.0mm •Color:Yellow •Character:Special	•Material:PVC •Thickness:2.0mm •Color:Red •Character:Special
F	W8	Y1	R1

Sharp end conveyor connection

Product Application Case

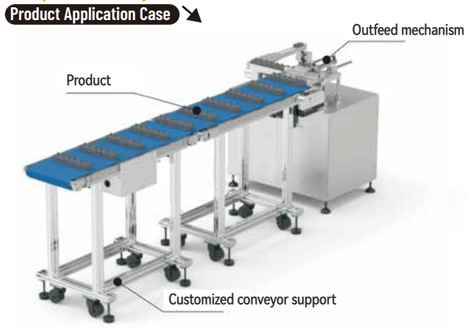

Three Slots Aluminum Profilee



Conveyor Features

Conveyor with strong structure and stable performance for big load and precision transferring application.
Sharp end can reduce connection gap.

※ Please do not exceed the allowed conveyor load and length. Belt thickness should be smaller than 2.0mm due to belt roller diameter.

Series Code	Type	※ Conveyor Features		Material			Surface Treatment		
		Application Features	Motion Features	Aluminum Profile	Motor Cover	Pulley Mounting Board	Aluminum Profile	Motor Cover	Pulley Mounting Board
BGZ01	Arcuate roller to avoid belt shift	Belt with good flatness	One-way transfer	Alloy			Surface electrophoresis	Painting	
BGZ51	Belt guide rib to avoid belt shift	Belt runs stable, but guide rib may be slight protrusion.	Forward/Reverse transfer						

Model		❸L-Conveyor Length 5mm	Motor Options				❽ Belt Spec	❾ Motor Brand
❶ Series Code	❷B-Belt Width		❹ Output Power(W)	❺ Voltage(V)	❻ Motor Type	❼ Gear box ratio		
BGZ01 Arcuate roller BGZ51 Belt with guide rib	100 200 300 400 500	480~4000	60 90 120 200	TA220 Single phase SA220 Three phase	IM Fix-speed motor SCM Speed adjustable motor INV VFD type	5 7.5 10 12.5 15 18 25 30 36 50 60 75 90 100 120 150 180 ⚠ When motor power is 6W gear box ratio can not be 5~10.	H1(Blackish green-General) H2(Green-General) D7(Black-ESD) D10(Bright green-ESD) F(White-Food grade) W8(Blue-Anti slip) Y1(Yellow- Special type) R1(Red- Special type)	GPG JSCC No motor
			90 120	DC24 DC TA220 Single phase	KMC Speed adjustable motor SWS Motor with drive			ZD No motor
			❹ Motor Series	❺ Control method	❻ Output torque	❼ Drive type		❾ Stepper motor brand
			86 series stepper motor	CM Open loop CME Closed loop	45 80 120	MC Pulse type IO IO type EC IO typeEtherCAT RS RS485 ⚠ Default type: pulse type		S(Leadshine) No motor
			❹ Inertia	❺ Voltage(V)	❻ Output power			❾ Servo motor brand
			MH Servo motor	TA220 Single phase	750W			S(Leadshine) X(Panasonic) No motor

※ Recommend motor brand JSCC

Model code example	Conveyor Model	Belt Width	Conveyor Length	Output Power	Voltage	Control Method	Ratio	Belt Type	Motor Brand
Speed adjustable motor	BGZ01–	B300 –	L1500 –	60 –	TA220 –	SCM –	12.5 –	H2 –	G
Model code example	Conveyor Model	Belt Width	Conveyor Length	Motor series	Control Method	Output torque	Drive type	Belt Type	Motor Brand
Stepper motor	BGZ51–	B300 –	L1500 –	86 –	CM –	45 –	MC –	H2 –	S
Model code example	Conveyor Model	Belt Width	Conveyor Length	Inertia	Voltage	Output power	Drive type	Belt Type	Motor Brand
Servo motor	BGZ51–	B300 –	L1500 –	MH –	TA220 –	750W –	EC –	H2 –	X

Recommend belt width and conveyor length							
Model	B	L480 ≀ 1000	L1005 ≀ 1500	L1505 ≀ 2000	L2005 ≀ 2500	L2505 ≀ 3000	L3005 ≀ 4000
BGZ01 BGZ51	100	●	●	●	●	●	●
	200	●	●	●	●	●	●
	300	—	●	●	●	●	●
	400	—	—	—	●	●	●
	500	—	—	—	—	—	●

Conveyor Dimensions

Motor Specification : 60W ⟵ Motion Direction

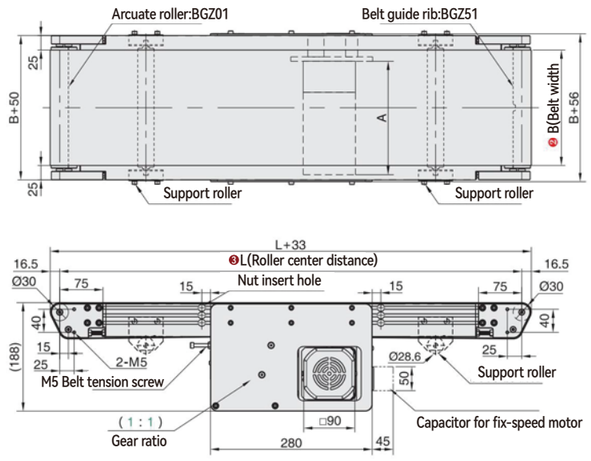

⚠ Above conveyor dimensions is basis on belt thickness H1(1.5mm).

Conveyor Profile Section

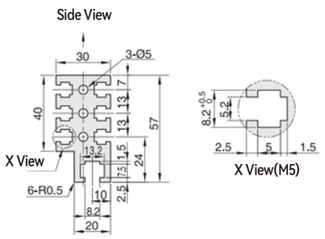

⚠ Nut specification inside aluminum profile slot:
Basis on L (Roller center distance)

480~999	1000~1499	1500~	Position	Spec	Status
4PCS	6PCS	8PCS	X View	M5(square)	Accessory
–	–	–	–	–	–

Conveyor speed and load capability

Form 1: Gear box ratio and conveyor speed(m/min)

Gear box radio	Fix-speed motor Speed(m/min)	Speed adjustable motor Speed(m/min)	Frequency motor Speed(m/min)	Brushless motor Speed(m/min)
5	42.4	25.4~42.4	52.8	0~94.2
7.5	28.3	17.0~28.3	35.2	0~62.8
10	21.2	12.7~21.2	26.4	0~47.1
12.5	17.0	10.2~17.0	21.1	0~37.7
15	14.1	8.5~14.1	17.6	0~31.4
18	11.8	7.1~11.8	14.7	0~26.2
25	8.5	5.1~8.5	10.6	0~18.8
30	7.1	4.2~7.1	8.8	0~15.7
36	5.9	3.5~5.9	7.3	0~13.1
50	4.2	2.5~4.2	5.3	0~9.4
60	3.5	2.1~3.5	4.4	0~7.9

Form 2: Pulse quality and conveyor speed(m/min)

Pulse quantity	Conveyor speed(m/min)	–	–	–	86 series stepper motor torque 4.5N.m	8.0N.m	12.0N.m	–
400	18.8	–	–	–	0~19.5	0~35.3	0~53.5	–
800	37.7	–	–	–	0~9.7	0~17.7	0~26.7	–
1600	75.4	–	–	–	0~4.9	0~8.8	0~13.4	–
3200	150.7	–	–	–	0~2.4	0~4.4	0~6.7	–
6400	301.4	–	–	–	0~1.2	0~2.2	0~3.3	–
12800	602.9	–	–	–	–	–	–	–
25600	1205.8	–	–	–	–	–	–	–
51200	2411.5	–	–	–	–	–	–	–

Instrument 1.Set the current as default 2.Set the code on motor drive
3.Default torque can be modified by current setting.

⚠ Test Condition:B=300 L=1500

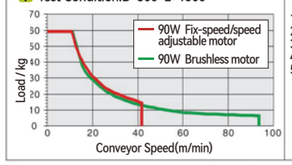

⚠ Speed calculation formula

1.Drive roller diameter D=50mm
2.Speed adjustable motor RPM=1350r/min
3.Frequency motor RPM=1680r/min
4.Brushless motor RPM=3000r/min
5.Belt pulley ratio i2=1:1

$$S=\frac{D\times\pi\times R\times i2}{i1\times1000}$$

$$S=\frac{50\times3.14\times1350\times1}{12.5\times1000}$$

S= 16.956m/min

⚠ Test Condition:B=300 L=1500 Current:5A

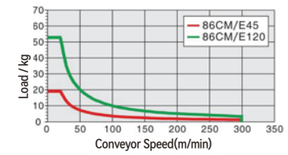

⚠ Speed calculation formula

1.Drive roller diameter D=50mm
2.Pulse quantity=400
3.Stepper motor angle J=1.8°
4.Belt pulley ratio i2=1:1

$$S=\frac{D\times\pi\times(M\times J/360\times60)\times i_2}{1000}$$

$$S=\frac{50\times3.14\times(400\times1.8/360\times60)\times1}{1000}$$

S= 18.84m/min

⚠ Conveyor speed and load capability are for reference, the data is measured by testing under specific conditions.

Belt Specification

Underlying Parameter			
• Material:PU • Thickness:1.5mm • Color:Blackish green • Character:General	• Material:PVC • Thickness:2.0mm • ColorBright green • Character:General	• Material:PU • Thickness:1.5mm • Color:Black • Character:ESD	• Material:PVC • Thickness:2.0mm • Color:Bright green • Character:ESD
H1	H2	D7	D10
Underlying Parameter			
• Material:PU • Thickness:1.2mm • Color:White • Character:Food grade	• Material:PU • Thickness:1.8mm • Color:Blue • Character:Anti slip	•Material:PVC •Thickness:2.0mm •Color:Yellow •Character:Special	•Material:PVC •Thickness:2.0mm •Color:Red •Character:Special
F	W8	Y1	R1

Sharp end conveyor for product feeding

Product Application Case

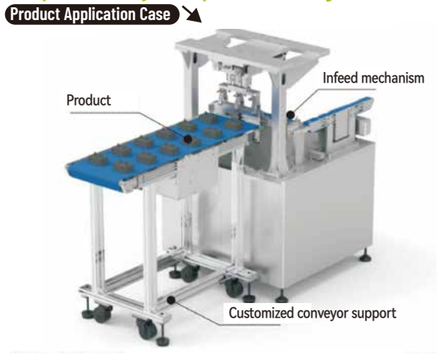

Dual Slots Aluminum Profilee



Conveyor Features

Conveyor with strong structure and stable performance for big load and precision transferring application.
Sharp end can reduce connection gap.

※ Please do not exceed the allowed conveyor load and length. Belt thickness should be smaller than 2.0mm due to belt roller diameter.

Series Code	Type	※ Conveyor Features		Material			Surface Treatment		
		Application Features	Motion Features	Aluminum Profile	Motor Cover	Pulley Mounting Board	Aluminum Profile	Motor Cover	Pulley Mounting Board
BLT01	Arcuate roller to avoid belt shift	Belt with good flatness	One-way transfer	Alloy			Surface anodizing	Painting	
BLT51	Belt guide rib to avoid belt shift	Belt runs stable, but guide rib may be slight protrusion.	Forward/Reverse transfer						

Model		❸L-Conveyor Length 5mm	Motor Options					❽ Belt Spec	❾ Motor Brand
❶ Series Code	❷B-Belt Width		❹ Output Power(W)	❺ Voltage(V)	❻ Motor Type	❼ Gear box ratio			
BLT01 Arcuate roller BLT51 Belt with guide rib	80~600 Min.Step (5:mm)	550~5000	60 90 120 200	TA220 Single phase SA220 Three phase	IM Fix-speed motor SCM Speed adjustable motor INV VFD type	5 7.5 10 12.5 15 18 25 30 36 50 60 75 90 100 120 150 180 ⚠ When motor power is 6W gear box ratio can not be 5~10.		H2(Yellow- Special type) H16(General type, White PVC) U2(Accumulation type, Green PVC) U9(Accumulation type, White PVC) D1(ESD, Green PVC) F1(Food grade, White PU) M2(Oil resistant, Green PU) Y1(Special type, yellow PVC) R1(Special type, yellow PVC)	GPG JSCC No motor
			90 120	DC24 DC TA220 Single phase	KMC Speed adjustable motor SWS Motor with drive				ZD No motor
			❹ Motor Series	❺ Control method	❻ Output torque	❼ Drive type			❾ Stepper motor brand
			86 series stepper motor	CM Open loop CME Closed loop	45 80 120	MC Pulse type IO IO type EC IO typeEtherCAT RS RS485 ⚠ Default type: pulse type			S(Leadshine) No motor
			❹ Inertia	❺ Voltage(V)	❻ Output power				❾ Servo motor brand
			MH Servo motor	TA220 Single phase	750W				S(Leadshine) X(Panasonic) No motor

※ Recommend motor brand JSCC

Model code example										
"—" Model code example	Conveyor Model	Belt Width	Conveyor Length	Output Power	Voltage	Control Method	Ratio	Belt Type	Motor Brand	
Speed adjustable motor	BLT01	B300	L1500	60	TA220	SCM	12.5	H1	G	
"—" Model code example	Conveyor Model	Belt Width	Conveyor Length	Motor series	Control Method	Output torque	Drive type	Belt Type	Motor Brand	
Stepper motor	BLT51	B300	L1500	86	CM	45	MC	H1	S	
"—" Model code example	Conveyor Model	Belt Width	Conveyor Length	Inertia	Voltage	Output power	Drive type	Belt Type	Motor Brand	
Servo motor	BLT51	B300	L1500	MH	TA220	750W	EC	H1	X	

Recommend belt width and conveyor length							
Model	B	L550 ≀ 600	L605 ≀ 1500	L1505 ≀ 2000	L2005 ≀ 2500	L2505 ≀ 3000	L3005 ≀ 5000
BLT01 BLT51	80~200	●	●	●	●	●	●
	205~300	●	●	●	●	●	●
	305~400	●	●	●	●	●	●
	405~500	—	●	●	●	●	●
	—	—	—	—	—	—	—

Conveyor Dimensions

Motor Specification : 90W ⟵ Motion Direction

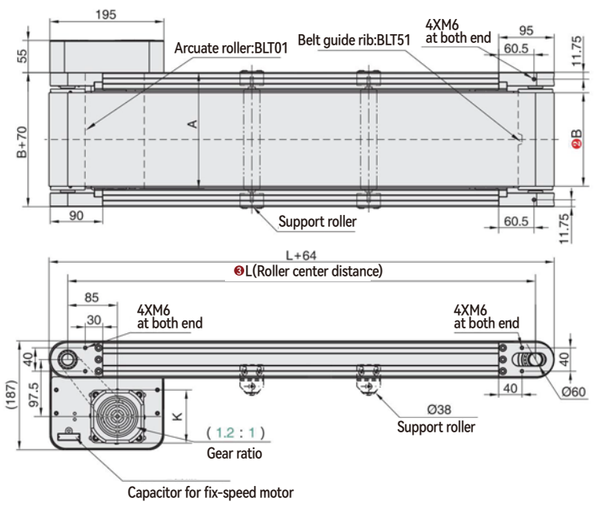

⚠ When load is higher than 25kg, conveyor should use chain gear instead of belt pulley.

Conveyor Profile Section

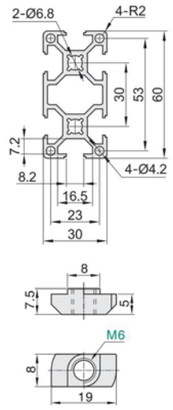

Nut is offered as accessory.

⚠ Nut specification inside aluminum profile slot:
Basis on L (Roller center distance)

550~999	1000~1499	1500~	Position	Spec	Status
16PCS	24PCS	32PCS	X View	M5(square)	Accessory
—	—	—	—	—	—

Conveyor speed and load capability

Form 1: Gear box ratio and conveyor speed(m/min)

Gear box radio	Fix-speed motor Speed(m/min)	Speed adjustable motor Speed(m/min)	Frequency motor Speed(m/min)	Brushless motor Speed(m/min)
5	61.0	36.6~61.0	76.0	0~135.6
7.5	40.7	24.4~40.7	50.6	0~90.4
10	30.5	18.3~30.5	38.0	0~67.8
12.5	24.4	14.6~24.4	30.4	0~54.3
15	20.3	12.2~20.3	25.3	0~45.2
18	17.0	10.2~17.0	21.1	0~37.7
25	12.2	7.3~12.2	15.2	0~27.1
30	10.2	6.1~10.2	12.7	0~22.6
36	8.5	5.1~8.5	10.6	0~18.8
50	6.1	3.7~6.1	7.6	0~13.6
60	5.1	3.1~5.1	6.3	0~11.3

Form 2: Pulse quality and conveyor speed(m/min)

Pulse quantity	Conveyor speed(m/min)	—	—	—	86 series stepper motor torque 4.5N.m	8.0N.m	12.0N.m	—
400	27.1	—	—	—	0~11.0	0~20.2	0~30.7	—
800	54.3	—	—	—	0~5.5	0~10.1	0~15.3	—
1600	108.5	—	—	—	0~2.8	0~5.0	0~7.7	—
3200	217.0	—	—	—	0~1.4	0~2.5	0~3.8	—
6400	434.1	—	—	—	0~0.7	0~1.3	0~1.9	—
12800	868.1	—	—	—	—	—	—	—
25600	1736.3	—	—	—	—	—	—	—
51200	3472.6	—	—	—	—	—	—	—

Instrument 1.Set the current as default 2.Set the code on motor drive
3.Default torque can be modified by current setting.

⚠ Test Condition:B=300 L=1500

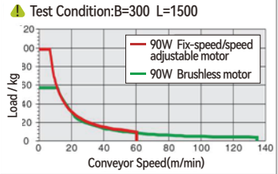

⚠ Speed calculation formula

1.Drive roller diameter D=60mm
2.Speed adjustable motor RPM=1350r/min
3.Frequency motor RPM=1680r/min
4.Brushless motor RPM=3000r/min
5.Belt pulley ratio i2=1.2:1

$$S=\frac{D\times\pi\times R\times i2}{i1\times1000}$$

$$S=\frac{60\times3.14\times1350\times1.2}{12.5\times1000}$$

S= 24.41664m/min

⚠ Test Condition:B=300 L=1500 Current:5A

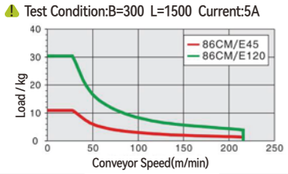

⚠ Speed calculation formula

1.Drive roller diameter D=60mm
2.Pulse quantity=400
3.Stepper motor angle J=1.8°
4.Belt pulley ratio i2=1.2:1

$$S=\frac{D\times\pi\times(M\times J/360\times60)\times i_2}{1000}$$

$$S=\frac{60\times3.14\times(400\times1.8/360\times60)\times1.2}{1000}$$

S=27.1296m/min

⚠ Conveyor speed and load capability are for reference, the data is measured by testing under specific conditions.

Belt Specification

Underlying Parameter			
• Material:PVC • Thickness:2.0mm • Color:green • Character:General	• Material:PVC • Thickness:2.0mm • Color:White • Character:General	• Material:PVC • Thickness:1.3mm • Color:Green-Double sided gauze • Character:Accumulation	• Material:PVC • Thickness:2.0mm • Color:green • Character:ESD
H2	H16	U2	D1
Underlying Parameter			
• Material:PU • Thickness:1.5mm • Color:White • Character:Food grade	• Material:PU • Thickness:1.4mm • Color:Bright green • Character:Oil resistance	• Material:PVC • Thickness:2.0mm • Color:Yellow • Character:Special	• Material:PVC • Thickness:2.0mm • Color:Red • Character:Special
F1	M2	Y1	R1

Belt conveyor with free flow guide profile to reduce friction.

Product Application Case



Dual Slots Aluminum Profilee



Conveyor Features

Conveyor made of 3060 EU type aluminum profile for big load application.

※ Please do not exceed the allowed conveyor load and length. Belt thickness should be smaller than 2.0mm due to belt roller diameter.

Series Code	Type	※ Conveyor Features		Material			Surface Treatment		
		Application Features	Motion Features	Aluminum Profile	Motor Cover	Pulley Mounting Board	Aluminum Profile	Motor Cover	Pulley Mounting Board
BLZ01	Arcuate roller to avoid belt shift	Belt with good flatness	One-way transfer	Alloy			Surface anodizing	Painting	
BLZ51	Belt guide rib to avoid belt shift	Belt runs stable, but guide rib may be slight protrusion.	Forward/Reverse transfer						

Model		❸L-Conveyor Length 5mm	Motor Options				❽ Belt Spec	❾ Motor Brand
❶ Series Code	❷B-Belt Width		❹ Output Power(W)	❺ Voltage(V)	❻ Motor Type	❼ Gear box ratio		
BLZ01 Arcuate roller BLZ51 Belt with guide rib	80~600 Min.Step (5:mm)	600~4000	60 90 120 200	TA220 Single phase SA220 Three phase	IM Fix-speed motor SCM Speed adjustable motor INV VFD type	5 7.5 10 12.5 15 18 25 30 36 50 60 75 90 100 120 150 180 ⚠ When motor power is 6W gear box ratio can not be 5~10.	H2(Yellow- Special type) H16(General type, White PVC) U2(Accumulation type, Green PVC) U9(Accumulation type, White PVC) D1(ESD, Green PVC) F1(Food grade, White PU) M2(Oil resistant, Green PU) Y1(Special type, yellow PVC) R1(Special type, yellow PVC)	GPG JSCC No motor
			90 120	DC24 DC TA220 Single phase	KMC Speed adjustable motor SWS Motor with drive			ZD No motor
			❹ Motor Series	❺ Control method	❻ Output torque	❼ Drive type		❾ Stepper motor brand
			86 series stepper motor	CM Open loop CME Closed loop	45 80 120	MC Pulse type IO IO type EC IO typeEtherCAT RS RS485 ⚠ Default type: pulse type		S(Leadshine) No motor
			❹ Inertia	❺ Voltage(V)	❻ Output power			❾ Servo motor brand
			MH Servo motor	TA220 Single phase	750W			S(Leadshine) X(Panasonic) No motor

※ Recommend motor brand JSCC

Model code example									
"—" Model code example	Conveyor Model	Belt Width	Conveyor Length	Output Power	Voltage	Control Method	Ratio	Belt Type	Motor Brand
Speed adjustable motor	BLZ01—	B300 —	L1500 —	60 —	TA220 —	SCM —	12.5 —	H1 —	G
"—" Model code example	Conveyor Model	Belt Width	Conveyor Length	Motor series	Control Method	Output torque	Drive type	Belt Type	Motor Brand
Stepper motor	BLZ51—	B300 —	L1500 —	86 —	CM —	45 —	MC —	H1 —	S
"—" Model code example	Conveyor Model	Belt Width	Conveyor Length	Inertia	Voltage	Output power	Drive type	Belt Type	Motor Brand
Servo motor	BLZ51—	B300 —	L1500 —	MH —	TA220 —	750W —	EC —	H1 —	X

Recommend belt width and conveyor length							
Model	B	L600 ≀ 1000	L1005 ≀ 1500	L1505 ≀ 2000	L2005 ≀ 2500	L2505 ≀ 3000	L3005 ≀ 4000
BLZ01 BLZ51	80~200	●	●	●	●	●	●
	205~300	●	●	●	●	●	●
	305~400	●	●	●	●	●	●
	405~500	●	●	●	●	●	●
	—	—	—	—	—	—	—

Conveyor Dimensions

Motor Specification: 120W ⟵ Motion Direction

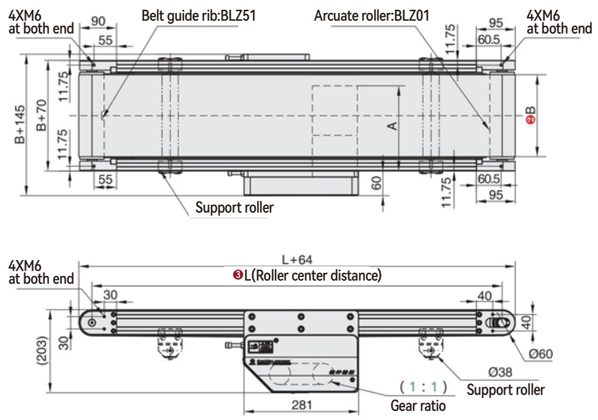

⚠ When load is higher than 25kg, conveyor should use chain gear instead of belt pulley.

Conveyor Profile Section

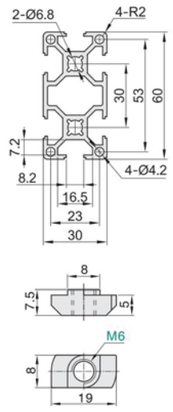

Nut is offered as accessory.

⚠ Nut specification inside aluminum profile slot: Basis on L (Roller center distance)

600~999	1000~1499	1500~	Position	Spec	Status
16PCS	24PCS	32PCS	—	M6(T type)	Accessory
—	—	—	—	—	—

Conveyor speed and load capability

Form 1: Gear box ratio and conveyor speed(m/min)

Gear box radio	Fix-speed motor Speed(m/min)	Speed adjustable motor Speed(m/min)	Frequency motor Speed(m/min)	Brushless motor Speed(m/min)
5	50.9	30.5~50.9	63.3	0~113.0
7.5	33.9	20.3~33.9	42.2	0~75.4
10	25.4	15.3~25.4	31.7	0~56.5
12.5	20.3	12.2~20.3	25.3	0~45.2
15	17.0	10.2~17.0	21.1	0~37.7
18	14.1	8.5~14.1	17.6	0~31.4
25	10.2	6.1~10.2	12.7	0~22.6
30	8.5	5.1~8.5	10.6	0~18.8
36	7.1	4.2~7.1	8.8	0~15.7
50	5.1	3.1~5.1	6.3	0~11.3
60	4.2	2.5~4.2	5.3	0~9.4

Form 2: Pulse quality and conveyor speed(m/min)

Pulse quantity	Conveyor speed(m/min)	—	—	—	86 series stepper motor torque 4.5N.m	8.0N.m	12.0N.m	—
400	22.6	—	—	—	0~16.1	0~29.3	0~44.4	—
800	45.2	—	—	—	0~8.0	0~14.6	0~22.2	—
1600	90.4	—	—	—	0~4.0	0~7.3	0~11.1	—
3200	180.9	—	—	—	0~2.0	0~3.7	0~5.6	—
6400	361.7	—	—	—	0~1.0	0~1.8	0~2.8	—
12800	723.5	—	—	—	—	—	—	—
25600	1446.9	—	—	—	—	—	—	—
51200	2893.8	—	—	—	—	—	—	—

Instrument 1.Set the current as default 2.Set the code on motor drive 3.Default torque can be modified by current setting.

⚠ Test Condition:B=300 L=1500

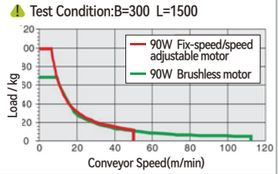

⚠ Speed calculation formula

1.Drive roller diameter D=60mm
2.Speed adjustable motor RPM=1350r/min
3.Frequency motor RPM=1680r/min
4.Brushless motor RPM=3000r/min
5.Belt pulley ratio i2=1:1

$S=\frac{D\times\pi\times R\times i2}{i1\times1000}$

$S=\frac{60\times3.14\times1350\times1}{12.5\times1000}$

S=20.3472m/min

⚠ Test Condition:B=300 L=1500 Current:5A

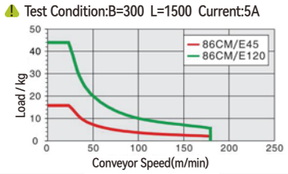

⚠ Speed calculation formula

1.Drive roller diameter D=60mm
2.Pulse quantity=400
3.Stepper motor angle J=1.8°
4.Belt pulley ratio i2=1:1

$S=\frac{D\times\pi\times(M\times J/360\times60)\times i_2}{1000}$

$S=\frac{60\times3.14\times(400\times1.8/360\times60)\times1}{1000}$

S=22.608m/min

⚠ Conveyor speed and load capability are for reference, the data is measured by testing under specific conditions.

Belt Specification

Underlying Parameter			
• Material:PVC • Thickness:2.0mm • Color:green • Character:General	• Material:PVC • Thickness:2.0mm • Color:White • Character:General	• Material:PVC • Thickness:1.3mm • Color:Green-Double sided gauze • Character:Accumulation	• Material:PVC • Thickness:2.0mm • Color:green • Character:ESD
H2	H16	U2	D1
Underlying Parameter			
• Material:PU • Thickness:1.5mm • Color:White • Character:Food grade	• Material:PU • Thickness:1.4mm • Color:Bright green • Character:Oil resistance	• Material:PVC • Thickness:2.0mm • Color:Yellow • Character:Special	• Material:PVC • Thickness:2.0mm • Color:Red • Character:Special
F1	M2	Y1	R1

Belt conveyor with free flow guide profile to reduce friction.

Product Application Case

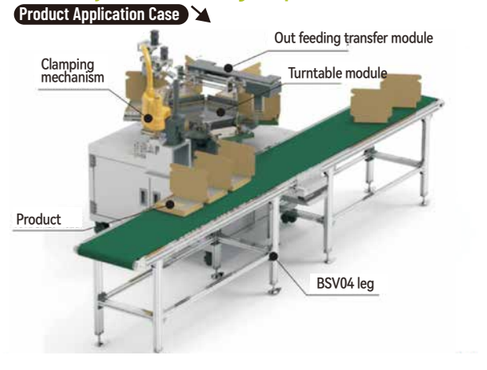

Dual Slots Aluminum Profilee



Conveyor Features

Conveyor made of 4080 EU type aluminum profile for big load application.

Conveyor Dimensions

Motor Specification: 200W ← Motion Direction

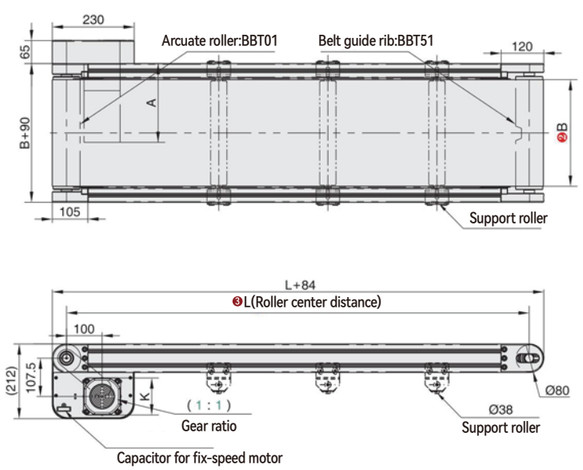

⚠ Above conveyor dimensions is basis on belt thickness H2(2.0mm).

Conveyor Profile Section

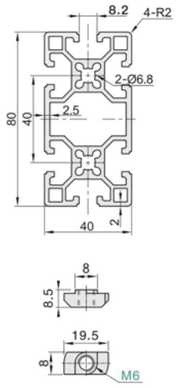

Nut is offered as accessory.

⚠ Nut specification inside aluminum profile slot:
Basis on L (Roller center distance)

600~999	1000~1499	1500~	Position	Spec	Status
16PCS	24PCS	32PCS	—	M6(T type)	Accessory
—	—	—	—	—	—

Conveyor speed and load capability

Form 1: Gear box ratio and conveyor speed(m/min)

Gear box radio	Fix-speed motor Speed(m/min)	Speed adjustable motor Speed(m/min)	Frequency motor Speed(m/min)	Brushless motor Speed(m/min)
5	67.8	40.7~67.8	84.4	—
7.5	45.2	27.1~45.2	56.3	—
10	33.9	20.3~33.9	42.2	—
12.5	27.1	16.3~27.1	33.8	—
15	22.6	13.6~22.6	28.1	—
18	18.8	11.3~18.8	23.4	—
25	13.6	8.1~13.6	16.9	—
30	11.3	6.8~11.3	14.1	—
36	9.4	5.7~9.4	11.7	—
50	6.8	4.1~6.8	8.4	—
60	5.7	3.4~5.7	7.0	—

⚠ Test Condition:B=300 L=2000

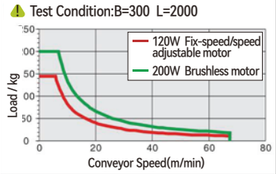

⚠ Speed calculation formula

1.Drive roller diameter D=80mm
2.Speed adjustable motor RPM=1350r/min
3.Frequency motor RPM=1680r/min
4.Brushless motor RPM=3000r/min
5.Belt pulley ratio i2=1:1

$$S=\frac{D\times\pi\times R\times i2}{i1\times1000}$$

$$S=\frac{80\times3.14\times1350\times1}{12.5\times1000}$$

S=27.1296m/min

Form 2: Pulse quality and conveyor speed(m/min)

Pulse quantity	Conveyor speed(m/min)	—	—	—	86 series stepper motor torque 4.5N.m	8.0N.m	12.0N.m	—
400	30.1	—	—	—	0~11.5	0~21.4	0~32.7	—
800	60.3	—	—	—	0~5.7	0~10.7	0~16.4	—
1600	120.6	—	—	—	0~2.9	0~5.4	0~8.2	—
3200	241.2	—	—	—	0~1.4	0~2.7	0~4.1	—
6400	482.3	—	—	—	0~0.7	0~1.3	0~2.0	—
12800	964.6	—	—	—	—	—	—	—
25600	1929.2	—	—	—	—	—	—	—
51200	3858.4	—	—	—	—	—	—	—

Instrument 1.Set the current as default 2.Set the code on motor drive
3.Default torque can be modified by current setting.

⚠ Test Condition:B=300 L=2000 Current:5A

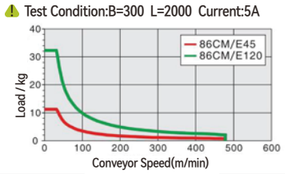

⚠ Speed calculation formula

1.Drive roller diameter D=80mm
2.Pulse quantity=400
3.Stepper motor angle J=1.8°
4.Belt pulley ratio i2=1:1

$$S=\frac{D\times\pi\times(M\times J/360\times60)\times i_2}{1000}$$

$$S=\frac{80\times3.14\times(400\times1.8/360\times60)\times1}{1000}$$

S=30.144m/min

⚠ Conveyor speed and load capability are for reference, the data is measured by testing under specific conditions.

※ Please do not exceed the allowed conveyor load and length. Belt thickness should be smaller than 3.0mm due to belt roller diameter.

Series Code	Type	※ Conveyor Features: Application Features	Motion Features	Material: Aluminum Profile / Motor Cover / Pulley Mounting Board	Surface Treatment: Aluminum Profile	Motor Cover	Pulley Mounting Board
BBT01	Arcuate roller to avoid belt shift	Belt with good flatness	One-way transfer	Alloy	Surface anodizing	Painting	
BBT51	Belt guide rib to avoid belt shift	Belt runs stable, but guide rib may be slight protrusion.	Forward/Reverse transfer				

Model: ❶ Series Code	❷ B-Belt Width	❸ L-Conveyor Length 5mm	Motor Options: ❹ Output Power(W)	❺ Voltage(V)	❻ Motor Type	❼ Gear box ratio	❽ Belt Spec	❾ Motor Brand
BBT01 Arcuate roller BBT51 Belt with guide rib	100~800 Min.Step (5:mm)	600~6000	120 200	TA220 Single phase SA220 Three phase	IM Fix-speed motor SCM Speed adjustable motor INV VFD type	5 7.5 10 12.5 15 18 25 30 36 50 60 75 90 100 120 150 180 ⚠ When motor power is 6W gear box ratio can not be 5~10.	H2(Yellow- Special type) H16(General type, White PVC) U2(Accumulation type, Green PVC) U9(Accumulation type, White PVC) D1(ESD, Green PVC) F1(Food grade, White PU) M2(Oil resistant, Green PU) Y1(Special type, yellow PVC) R1(Special type, yellow PVC)	GPG JSCC No motor
			❹ Motor Series	❺ Control method	❻ Output torque	❼ Drive type		❾ Stepper motor brand
			86 series stepper motor	CM Open loop CME Closed loop	45 80 120	MC Pulse type IO IO type EC IO typeEtherCAT RS RS485 ⚠ Default type: pulse type		S(Leadshine) No motor

※ Recommend motor brand JSCC

Model code example

"—" Model code example	Conveyor Model	Belt Width	Conveyor Length	Output Power	Voltage	Control Method	Ratio	Belt Type	Motor Brand
Speed adjustable motor	BBT01—	B300 —	L2000 —	120 —	TA220 —	SCM —	12.5 —	H8 —	G
"—" Model code example	Conveyor Model	Belt Width	Conveyor Length	Motor series	Control Method	Output torque	Drive type	Belt Type	Motor Brand
Stepper motor	BBT01—	B300 —	L2000 —	120 —	SA220 —	INV —	12.5 —	H8 —	G
"—" Model code example	Conveyor Model	Belt Width	Conveyor Length	Inertia	Voltage	Output power	Drive type	Belt Type	Motor Brand
Servo motor	BBT51—	B300 —	L2000 —	86 —	CM —	45 —	MC —	H8 —	S

Recommend belt width and conveyor length

Model	B	L600~1500	L1505~2000	L2005~2500	L2505~3000	L3005~5000	L5005~6000
BBT01 BBT51	100~200	●	●	●	●	●	●
	205~400	●	●	●	●	●	●
	405~600	●	●	●	●	●	●
	605~800	●	●	●	●	●	●
	—	—	—	—	—	—	—

Belt Specification

Underlying Parameter			
• Material:PVC • Thickness:2.0mm • Color:green • Character:General	• Material:PVC • Thickness:2.0mm • Color:White • Character:General	• Material:PVC • Thickness:1.3mm • Color:Green-Double sided gauze • Character:Accumulation	• Material:PVC • Thickness:2.0mm • Color:green • Character:ESD
H2 	H16 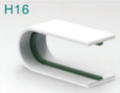	U2 	D1 
Underlying Parameter			
• Material:PU • Thickness:1.5mm • Color:White • Character:Food grade	• Material:PU • Thickness:1.4mm • Color:Bright green • Character:Oil resistance	•Material:PVC •Thickness:2.0mm •Color:Yellow •Character:Special	•Material:PVC •Thickness:2.0mm •Color:Red •Character:Special
F1 	M2 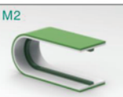	Y1 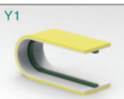	R1 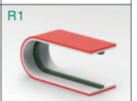

Belt conveyor automated production.

Product Application Case

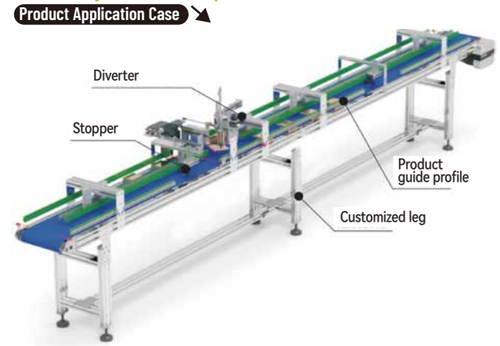

Dual Slots Aluminum Profilee

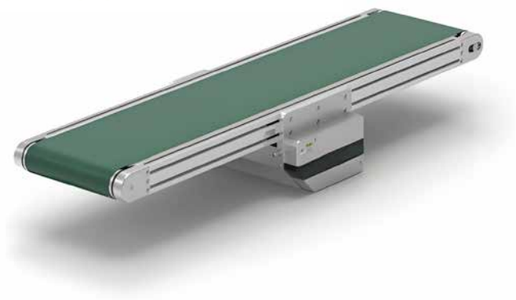

Conveyor Features

Stable and precision conveyor with
strong structure for medium load application.

※ Please do not exceed the allowed conveyor load and length. Belt thickness should be smaller than 3.0mm due to belt roller diameter.

Series Code	Type	※ Conveyor Features		Material			Surface Treatment		
		Application Features	Motion Features	Aluminum Profile	Motor Cover	Pulley Mounting Board	Aluminum Profile	Motor Cover	Pulley Mounting Board
BBZ01	Arcuate roller to avoid belt shift	Belt with good flatness	One-way transfer	Alloy			Surface electrophoresis	Painting	
BBZ51	Belt guide rib to avoid belt shift	Belt runs stable, but guide rib may be slight protrusion.	Forward/Reverse transfer						

Model		❸L-Conveyor Length 5mm	Motor Options							
❶ Series Code	❷B-Belt Width		❹ Output Power(W)	❺ Voltage(V)	❻ Motor Type	❼ Gear box ratio		❽ Belt Spec	❾ Motor Brand	
BBZ01 Arcuate roller BBZ51 Belt with guide rib	100~800 Min.Step (5:mm)	600~5000	120 200	TA220 Single phase SA220	IM Fix-speed motor SCM Speed adjustable motor INV VFD type	5 7.5 10 12.5 15 18 25 30 36 50 60 75 90 100 120 150 180 ⚠ When motor power is 6W gear box ratio can not be 5~10.		H2((General type, Green PVC) H16(General type, White PVC) U2(Accumulation type, Green PVC) U9(Accumulation type, White PVC) D11(ESD, Green PVC) F1(Food grade, White PU) M2(Oil resistant, Green PU) Y1(Specialtype, yellow PVC) R1(Special type, yellow PVC)	GPG JSCC No motor	
			❹ Motor Series	❺ Control method	❻ Output torque	❼ Drive type			❾ Stepper motor brand	
			86 series stepper motor	CM Open loop CME Closed loop	45 80 120	MC Pulse type IO IO type EC IO typeEtherCAT RS RS485 ⚠ Default type: pulse type			S(Leadshine) No motor	

※ Recommend motor brand JSCC

Model code example	Conveyor Model	Belt Width	Conveyor Length	Output Power	Voltage	Control Method	Ratio	Belt Type	Motor Brand
Speed adjustable motor	BBZ01–	B300 –	L2000 –	120 –	TA220 –	SCM –	12.5 –	H8 –	G
Model code example	Conveyor Model	Belt Width	Conveyor Length	Motor series	Control Method	Output torque	Drive type	Belt Type	Motor Brand
Stepper motor	BBZ01–	B300 –	L2000 –	120 –	SA220 –	INV –	12.5 –	H8 –	G
Model code example	Conveyor Model	Belt Width	Conveyor Length	Inertia	Voltage	Output power	Drive type	Belt Type	Motor Brand
Servo motor	BBZ51–	B300 –	L2000 –	86 –	CM –	45 –	MC –	H8 –	S

Recommend belt width and conveyor length

Model	B	L600 ≀ 1500	L1505 ≀ 2000	L2005 ≀ 2500	L2505 ≀ 3000	L3005 ≀ 4000	L4005 ≀ 5000
BBZ01 BBZ51	100~200	●	●	●	●	●	●
	205~400	●	●	●	●	●	●
	405~600	●	●	●	●	●	●
	605~800	●	●	●	●	●	●
	—	—	—	—	—	—	—

Conveyor Dimensions

Motor Specification: 200W ⟵ Motion Direction

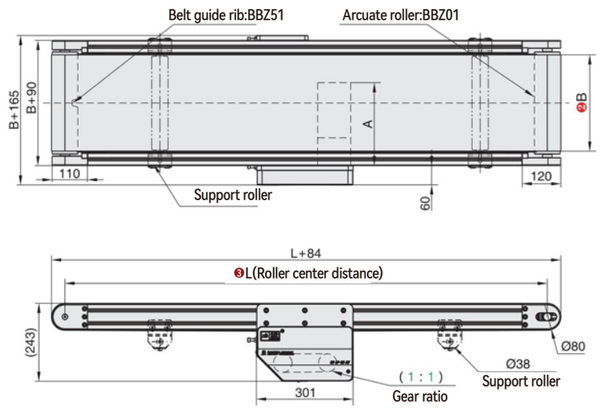

⚠ Above conveyor dimensions is basis on belt thickness H2(2.0mm).

Conveyor Profile Section

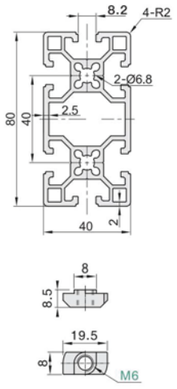

Nut is offered as accessory.

⚠ Nut specification inside aluminum profile slot:
Basis on L (Roller center distance)

600~999	1000~1499	1500~	Position	Spec	Status
16PCS	24PCS	32PCS	—	M6(T type)	Accessory
—	—	—	—	—	—

Conveyor speed and load capability

Form 1: Gear box ratio and conveyor speed(m/min)

Gear box radio	Fix-speed motor Speed(m/min)	Speed adjustable motor Speed(m/min)	Frequency motor Speed(m/min)	Brushless motor Speed(m/min)
5	67.8	40.7~67.8	84.4	—
7.5	45.2	27.1~45.2	56.3	—
10	33.9	20.3~33.9	42.2	—
12.5	27.1	16.3~27.1	33.8	—
15	22.6	13.6~22.6	28.1	—
18	18.8	11.3~18.8	23.4	—
25	13.6	8.1~13.6	16.9	—
30	11.3	6.8~11.3	14.1	—
36	9.4	5.7~9.4	11.7	—
50	6.8	4.1~6.8	8.4	—
60	5.7	3.4~5.7	7.0	—

Form 2: Pulse quality and conveyor speed(m/min)

Pulse quantity	Conveyor speed(m/min)	—	—	—	86 series stepper motor torque 4.5N.m	8.0N.m	12.0N.m	—
400	30.1	—	—	—	0~11.5	0~21.4	0~32.7	—
800	60.3	—	—	—	0~5.7	0~10.7	0~16.4	—
1600	120.6	—	—	—	0~2.9	0~5.4	0~8.2	—
3200	241.2	—	—	—	0~1.4	0~2.7	0~4.1	—
6400	482.3	—	—	—	0~0.7	0~1.3	0~2.0	—
12800	964.6	—	—	—	—	—	—	—
25600	1929.2	—	—	—	—	—	—	—
51200	3858.4	—	—	—	—	—	—	—

Instrument 1.Set the current as default 2.Set the code on motor drive
3.Default torque can be modified by current setting.

⚠ Test Condition:B=300 L=2000

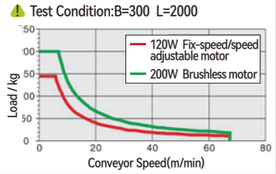

⚠ Speed calculation formula

1.Drive roller diameter D=80mm
2.Speed adjustable motor RPM=1350r/min
3.Frequency motor RPM=1680r/min
4.Brushless motor RPM=3000r/min
5.Belt pulley ratio i2=1:1

$S=\frac{D\times\pi\times R\times i2}{i1\times1000}$

$S=\frac{80\times3.14\times1350\times1}{12.5\times1000}$

S=27.1296m/min

⚠ Test Condition:B=300 L=2000 Current:5A

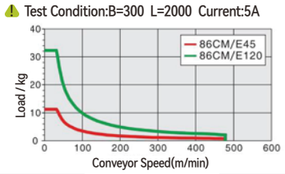

⚠ Speed calculation formula

1.Drive roller diameter D=80mm
2.Pulse quantity=400
3.Stepper motor angle J=1.8°
4.Belt pulley ratio i2=1:1

$S=\frac{D\times\pi\times(M\times J/360\times60)\times i_2}{1000}$

$S=\frac{80\times3.14\times(400\times1.8/360\times60)\times1}{1000}$

S=30.144m/min

⚠ Conveyor speed and load capability are for reference, the data is measured by testing under specific conditions.

Belt Specification

Underlying Parameter			
• Material:PVC • Thickness:2.0mm • Color:green • Character:General	• Material:PVC • Thickness:2.0mm • Color:White • Character:General	• Material:PVC • Thickness:1.3mm • Color:Green-Double sided gauze • Character:Accumulation	• Material:PVC • Thickness:2.0mm • Color:green • Character:ESD
H2	H16	U2	D1
Underlying Parameter			
• Material:PU • Thickness:1.5mm • Color:White • Character:Food grade	• Material:PU • Thickness:1.4mm • Color:Bright green • Character:Oil resistance	• Material:PVC • Thickness:2.0mm • Color:Yellow • Character:Special	• Material:PVC • Thickness:2.0mm • Color:Red • Character:Special
F1	M2	Y1	R1

Belt conveyor automated production.

Product Application Case

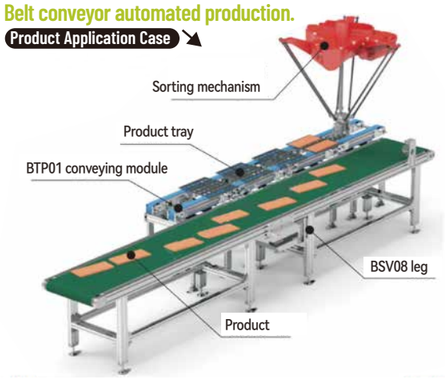

Dual Slots Aluminum Profilee

Conveyor Features

Motor is inserted in drive roller to save space, for small load.



※ Please do not exceed the allowed conveyor load and length. Belt thickness should be smaller than 1.2mm due to belt roller diameter.

Series Code	Type	※ Conveyor Features		Material			Surface Treatment		
		Application Features	Motion Features	Aluminum Profile	Motor Cover	Pulley Mounting Board	Aluminum Profile	Motor Cover	Pulley Mounting Board
BAE01	Arcuate roller to avoid belt shift	Belt with good flatness	One-way transfer	Alloy			Surface electrophoresis	Painting	
BAE21	Belt guide rib to avoid belt shift	Belt runs stable, but guide rib may be slight protrusion.	Forward/Reverse transfer						

Model		❸L-Conveyor Length 5mm	Motor Options				❽ Belt Speciation	❾ Motor Brand
❶ Series Code	❷B-Belt Width		❹ Output Power(W)	❺ Voltage(V)	❻ Motor Type	❼ Speed Range(m/min)		
BAE01 Arcuate roller	150 200 250 300	200~1500	10	DC24 DC	KMC Speed adjustable motor SWS Motor with drive	10 (0~10m/min)	H(Blackish green) H6(Bright green) D(Black-ESD) D9(Blackish green-ESD) F(White-Food grade) Q2(Green-incline application) Y2(Yellow- Special type) R(Red- Special type)	B(BOZ
BAE21 Belt with guide rib	200 250 300 350	250~1500						

⚠ Recommend speed control range within 20% during application.

⚠ Motor build-in drive roller

⚠ Recommend belt width is 150mm; Lead time for belt width 150mmzB≤350mm is longer.

Model code example	Conveyor Model	Belt Width	Conveyor Length	Output Power	Voltage	Control Method	Ratio	Belt Type	Motor Brand
Speed adjustable motor	BAE01	B150	L800	10	DC24	KMC	10	H	B
Model code example	Conveyor Model	Belt Width	Conveyor Length	Motor series	Control Method	Output torque	Drive type	Belt Type	Motor Brand
Stepper motor	BAE21	B200	L800	10	DC24	KMC	10	H	B
Model code example	Conveyor Model	Belt Width	Conveyor Length	Inertia	Voltage	Output power	Drive type	Belt Type	Motor Brand
Servo motor	BAE21	B200	L800	10	DC24	SWS	10	H	B

Recommend belt width and conveyor length							
Model	B	L200 ~ 400	L405 ~ 500	L505 ~ 600	L605 ~ 700	L705 ~ 800	L805 ~ 1500
BAE01 BAE21	150	●	●	●	●	●	●
	200	●	●	●	●	●	●
	250	—	—	●	●	●	●
	300	—	—	—	●	●	●
	—	—	—	—	—	—	—

Conveyor Dimensions

Motor Specification : 10W ⟵ Motion Direction

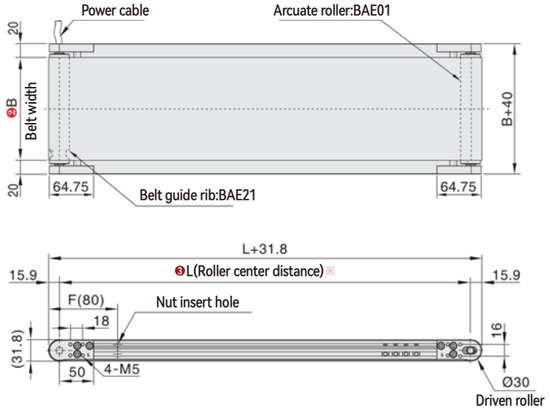

⚠ Above conveyor dimensions is basis on belt thickness H(0.9mm).

Conveyor Profile Section

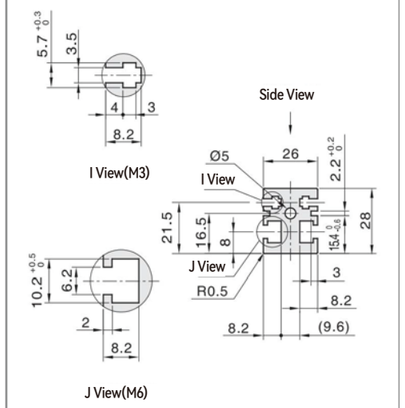

⚠ Nut specification inside aluminum profile slot: Basis on L (Roller center distance)

200~999	1000~1499	1500~	Position	Spec	Status
4PCS	6PCS	8PCS	I View	M3 (hexagonal)	Accessory
4PCS	6PCS	8PCS	J View	M6(square)	Accessory

Controller and outline drawing

Figure 1: KMC speed control type(power supply: DC24V/DC48V)

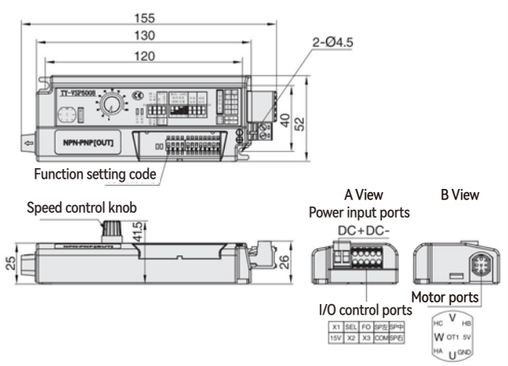

Figure 2: SWS Communication control type (power supply: DC24V/DC48V)

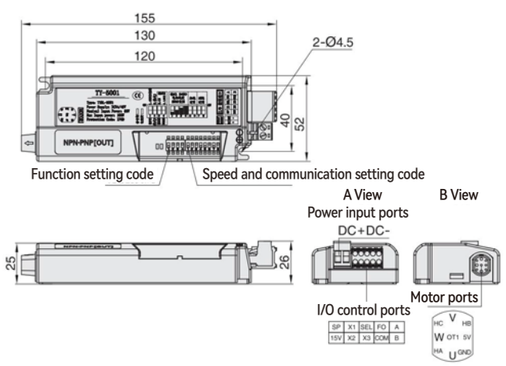

Belt Specification

Underlying Parameter			
• Material:PU • Thickness:0.9mm • Color:Blackish green • Character:General	• Material:PU • Thickness:0.9mm • Color:Bright green • Character:General	• Material:PU • Thickness:0.8mm • Color:Black • Character:ESD	• Material:PU • Thickness:1.0mm • Color:Blackish green • Character:ESD
H	H6	D	D9
Underlying Parameter			
• Material:PU • Thickness:1.2mm • Color:White • Character:Food grade	• Material:PU • Thickness:1.0mm • Color:Bright green • Character:Incline	•Material:PVC •Thickness:1.2mm •Color:Yellow •Character:Special	•Material:PVC •Thickness:1.2mm •Color:Red •Character:Special
F	Q2	Y2	R

Conveyor for small parts transferring

Product Application Case

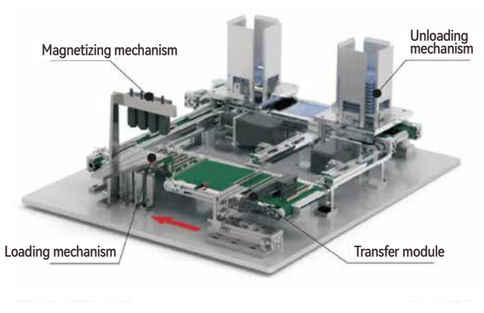

Dual Slots Aluminum Profilee

Conveyor Features

Motor is inserted in drive roller to save space, for small load.

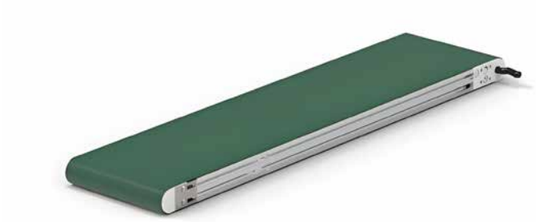

Conveyor Dimensions

Motor Specification: 10W ← Motion Direction

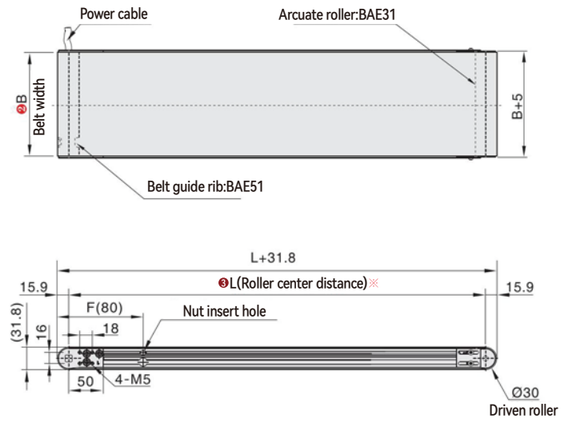

⚠ Above conveyor dimensions is basis on belt thickness H(0.9mm).

Conveyor Profile Section

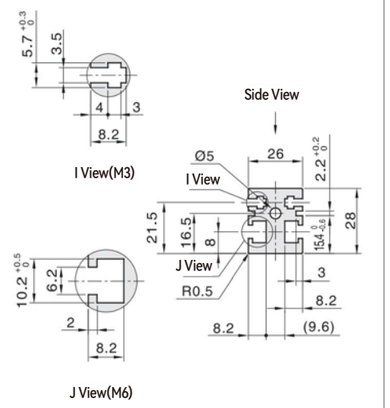

⚠ Nut specification inside aluminum profile slot:
Basis on L (Roller center distance)

200~999	1000~1499	1500~	Position	Spec	Status
4PCS	6PCS	8PCS	I View	M3 (hexagonal)	Accessory
4PCS	6PCS	8PCS	J View	M6(square)	Accessory

Controller and outline drawing

Figure 1: KMC speed control type(power supply: DC24V/DC48V)

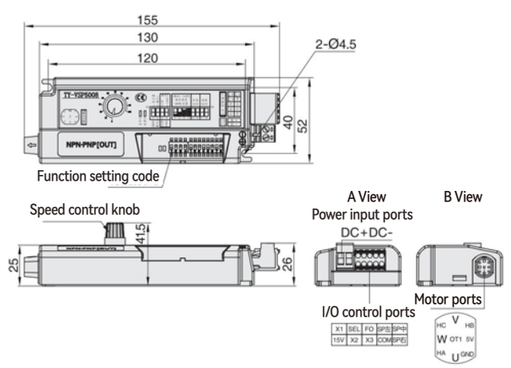

Figure 2: SWS Communication control type (power supply: DC24V/DC48V)

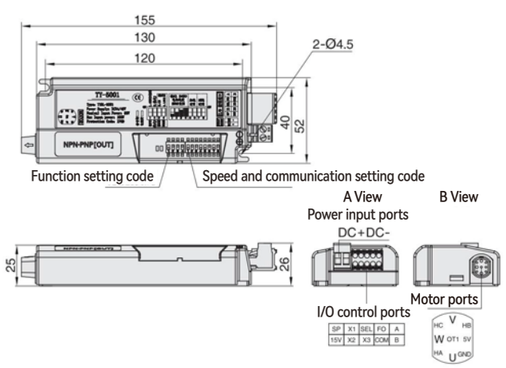

※ Please do not exceed the allowed conveyor load and length. Belt thickness should be smaller than 1.2mm due to belt roller diameter.

Series Code	Type	※ Conveyor Features		Material			Surface Treatment		
		Application Features	Motion Features	Aluminum Profile	Motor Cover	Pulley Mounting Board	Aluminum Profile	Motor Cover	Pulley Mounting Board
BAE31	Arcuate roller to avoid belt shift	Belt with good flatness	One-way transfer	Alloy			Surface electrophoresis	Painting	
BAE51	Belt guide rib to avoid belt shift	Belt runs stable, but guide rib may be slight protrusion.	Forward/Reverse transfer						

Model		❸L-Conveyor Length 5mm	Motor Options				❽ Belt Speciation	❾ Motor Brand
❶ Series Code	❷B-Belt Width		❹ Output Power(W)	❺ Voltage(V)	❻ Motor Type	❼ Speed Range(m/min)		
BAE31 Arcuate roller	150 200 250 300	200~1500	10	DC24 DC	KMC Speed adjustable motor SWS Motor with drive	10 (0~10m/min)	H(Blackish green) H6(Bright green) D(Black-ESD) D9(Blackish green-ESD) F(White-Food grade) Q2(Green-incline application) Y2(Yellow- Special type) R(Red- Special type)	B(BOZ
BAE51 Belt with guide rib	250 300 350 400	300~1500						

⚠ Recommend speed control range within 20% during application.

⚠ Motor build-in drive roller

Model code example	Conveyor Model	Belt Width	Conveyor Length	Output Power	Voltage	Control Method	Ratio	Belt Type	Motor Brand
"—" Speed adjustable motor	BAE31	B150	L800	10	DC24	KMC	10	H	B
"—" Stepper motor	BAE51	B250	L800	10	DC24	KMC	10	H	B
"—" Servo motor	BAE51	B250	L800	10	DC24	SWS	10	H	B

Model code example

Model code example	Conveyor Model	Belt Width	Conveyor Length	Motor series	Control Method	Output torque	Drive type	Belt Type	Motor Brand
"—" Stepper motor	BAE51	B250	L800	10	DC24	KMC	10	H	B

Model code example	Conveyor Model	Belt Width	Conveyor Length	Inertia	Voltage	Output power	Drive type	Belt Type	Motor Brand
"—" Servo motor	BAE51	B250	L800	10	DC24	SWS	10	H	B

Recommend belt width and conveyor length

Model	B	L200 ↑ 400	L405 ↑ 500	L505 ↑ 600	L605 ↑ 700	L705 ↑ 800	L805 ↑ 1500
BAE31 BAE51	200	●	●	●	●	●	●
	250	●	●	●	●	●	●
	300	—	—	●	●	●	●
	350	—	—	—	●	●	●
	—	—	—	—	—	—	—

Belt Specification

Underlying Parameter			
• Material:PU • Thickness:0.9mm • Color:Blackish green • Character:General	• Material:PU • Thickness:0.9mm • Color:Bright green • Character:General	• Material:PU • Thickness:0.8mm • Color:Black • Character:ESD	• Material:PU • Thickness:1.0mm • Color:Blackish green • Character:ESD
H	H6	D	D9
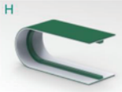	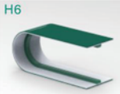	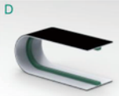	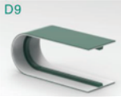
Underlying Parameter			
• Material:PU • Thickness:1.2mm • Color:White • Character:Food grade	• Material:PU • Thickness:1.0mm • Color:Bright green • Character:Incline	•Material:PVC •Thickness:1.2mm •Color:Yellow •Character:Special	•Material:PVC •Thickness:1.2mm •Color:Red •Character:Special
F	Q2	Y2	R
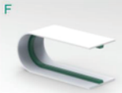		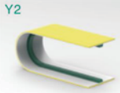	

Conveyor for small weight food sorting process

Product Application Case

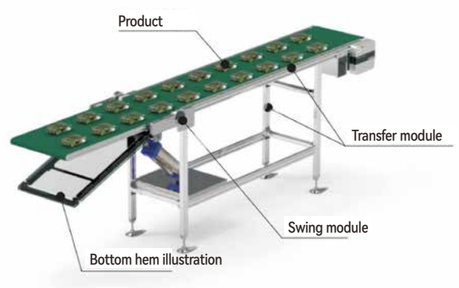

Dual Slots Aluminum Profilee

Conveyor Features

Motor is inserted in drive roller to save space, for small to medium load.



Conveyor Dimensions

Motor Specification : 10W ← Motion Direction

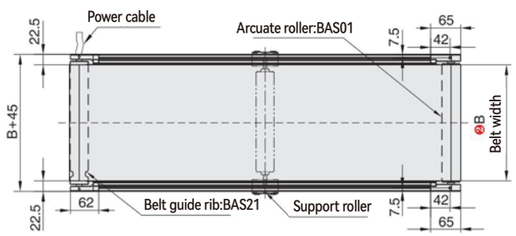

⚠ Above conveyor dimensions is basis on belt thickness H(0.9mm).

Conveyor Profile Section

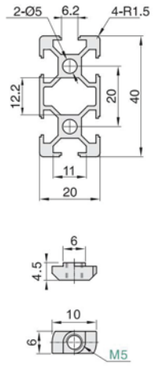

Nut is offered as accessory.

⚠ Nut specification inside aluminum profile slot:
Basis on L (Roller center distance)

250~999	1000~1499	1500~	Position	Spec	Status
16PCS	24PCS	32PCS	—	M5(T type)	Accessory
—	—	—	—	—	—

Controller and outline drawing

Figure 1: KMC speed control type(power supply: DC24V/DC48V)

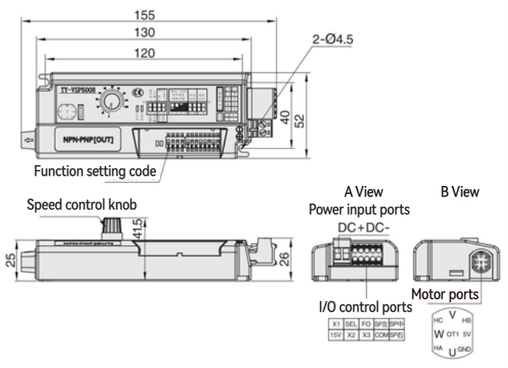

Figure 2: SWS Communication control type (power supply: DC24V/DC48V)

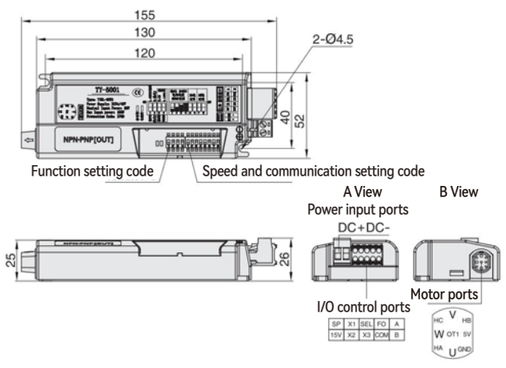

※ Please do not exceed the allowed conveyor load and length. Belt thickness should be smaller than 1.2mm due to belt roller diameter.

Series Code	Type	※ Conveyor Features		Material			Surface Treatment		
		Application Features	Motion Features	Aluminum Profile	Motor Cover	Pulley Mounting Board	Aluminum Profile	Motor Cover	Pulley Mounting Board
BAS01	Arcuate roller to avoid belt shift	Belt with good flatness	One-way transfer	Alloy			Surface electrophoresis	Painting	
BAS21	Belt guide rib to avoid belt shift	Belt runs stable, but guide rib may be slight protrusion.	Forward/Reverse transfer						

Model		❸L-Conveyor Length 5mm	Motor Options				❽ Belt Speciation	❾ Motor Brand
❶ Series Code	❷B-Belt Width		❹ Output Power(W)	❺ Voltage(V)	❻ Motor Type	❼ Speed Range(m/min)		
BAS01 Arcuate roller	200 250 300 350 400	250~2000	30	DC24 DC	KMC Speed adjustable motor SWS Motor with drive	10 (0~10m/min) 15 (0~15m/min) 25 (0~25m/min) 35 (0~35m/min)	H(Blackish green) H6(Bright green) D(Black-ESD) D9(Blackish green-ESD) F(White-Food grade) Q2(Green-incline application) Y2(Yellow- Special type) R(Red- Special type)	B(BOZ
BAS21 Belt with guide rib	250 300 350 400 450	300~2000						

⚠ Recommend speed control range within 20% during application.

⚠ Motor build-in drive roller

Model code example	Conveyor Model	Belt Width	Conveyor Length	Output Power	Voltage	Control Method	Ratio	Belt Type	Motor Brand
Speed adjustable motor	BAS01	B200	L1000	30	DC24	KMC	25	H	B
Model code example	Conveyor Model	Belt Width	Conveyor Length	Motor series	Control Method	Output torque	Drive type	Belt Type	Motor Brand
Stepper motor	BAS21	B250	L1000	30	DC24	KMC	25	H	B
Model code example	Conveyor Model	Belt Width	Conveyor Length	Inertia	Voltage	Output power	Drive type	Belt Type	Motor Brand
Servo motor	BAS21	B250	L1000	30	DC24	SWS	25	H	B

Recommend belt width and conveyor length

Model	B	L250 ↑ 400	L405 ↑ 500	L505 ↑ 600	L605 ↑ 700	L705 ↑ 800	L805 ↑ 2000
BAS01 BAS21	200	●	●	●	●	●	●
	250	●	●	●	●	●	●
	300	—	—	●	●	●	●
	350	—	—	—	●	●	●
	400	—	—	—	●	●	●

Belt Specification

Underlying Parameter			
• Material:PU • Thickness:0.9mm • Color:Blackish green • Character:General	• Material:PU • Thickness:0.9mm • Color:Bright green • Character:General	• Material:PU • Thickness:0.8mm • Color:Black • Character:ESD	• Material:PU • Thickness:1.0mm • Color:Blackish green • Character:ESD
H	H6	D	D9
Underlying Parameter			
• Material:PU • Thickness:1.2mm • Color:White • Character:Food grade	• Material:PU • Thickness:1.0mm • Color:Bright green • Character:Incline	•Material:PVC •Thickness:1.2mm •Color:Yellow •Character:Special	•Material:PVC •Thickness:1.2mm •Color:Red •Character:Special
F	Q2	Y2	R

Conveyor for small weight food sorting process

Product Application Case

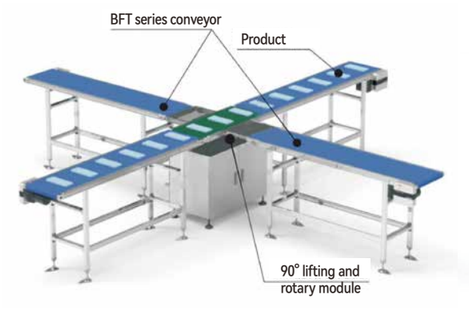

Dual Slots Aluminum Profilee

Conveyor Features

Motor is inserted in drive roller to save space, for small to medium load.

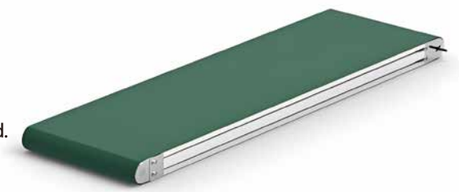

※ Please do not exceed the allowed conveyor load and length. Belt thickness should be smaller than 1.2mm due to belt roller diameter.

Series Code	Type	※ Conveyor Features		Material			Surface Treatment		
		Application Features	Motion Features	Aluminum Profile	Motor Cover	Pulley Mounting Board	Aluminum Profile	Motor Cover	Pulley Mounting Board
BAS31	Arcuate roller to avoid belt shift	Belt with good flatness	One-way transfer	Alloy			Surface electrophoresis	Painting	
BAS51	Belt guide rib to avoid belt shift	Belt runs stable, but guide rib may be slight protrusion.	Forward/Reverse transfer						

Model		❸L-Conveyor Length 5mm	Motor Options				❽ Belt Speciation	❾ Motor Brand
❶ Series Code	❷B-Belt Width		❹ Output Power(W)	❺ Voltage(V)	❻ Motor Type	❼ Speed Range(m/min)		
BAS31 Arcuate roller	200 250 300 350 400	250~2000	30	DC24 DC	KMC Speed adjustable motor	10 (0~10m/min) 15 (0~15m/min) 25 (0~25m/min) 35 (0~35m/min)	H(Blackish green) H6(Bright green) D(Black-ESD) D9(Blackish green-ESD) F(White-Food grade) Q2(Green-incline application) Y2(Yellow- Special type) R(Red- Special type)	B(BOZ
BAS51 Belt with guide rib	300 350 400 450	300~2000			SWS Motor with drive	⚠ Recommend speed control range within 20% during application.		⚠ Motor build-in drive roller

Model code example									
"—" Model code example	Conveyor Model	Belt Width	Conveyor Length	Output Power	Voltage	Control Method	Ratio	Belt Type	Motor Brand
Speed adjustable motor	BAS31 –	B200 –	L1000 –	30 –	DC24 –	KMC –	25 –	H –	B
"—" Model code example	Conveyor Model	Belt Width	Conveyor Length	Motor series	Control Method	Output torque	Drive type	Belt Type	Motor Brand
Stepper motor	BAS51 –	B250 –	L1000 –	30 –	DC24 –	KMC –	25 –	H –	B
"—" Model code example	Conveyor Model	Belt Width	Conveyor Length	Inertia	Voltage	Output power	Drive type	Belt Type	Motor Brand
Servo motor	BAS51 –	B250 –	L1000 –	30 –	DC24 –	SWS –	25 –	H –	B

Recommend belt width and conveyor length							
Model	B	L250 ↑ 400	L405 ↑ 500	L505 ↑ 600	L605 ↑ 700	L705 ↑ 800	L805 ↑ 2000
BAS31 BAS51	200	●	●	●	●	●	●
	250	●	●	●	●	●	●
	300	—	—	●	●	●	●
	350	—	—	—	●	●	●
	400	—	—	—	●	●	●

Conveyor Dimensions

Motor Specification : 30W ← Motion Direction

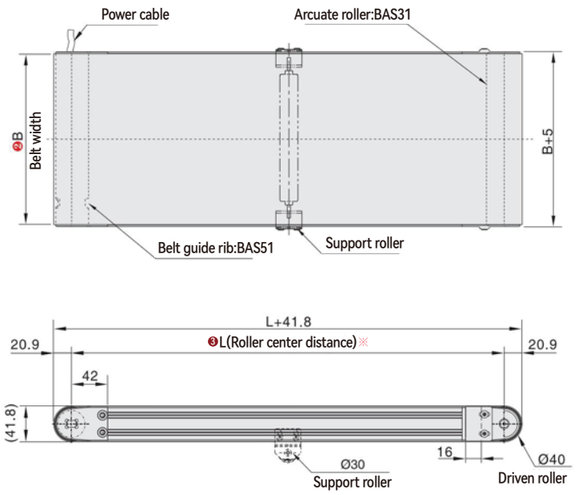

⚠ Above conveyor dimensions is basis on belt thickness H(0.9mm).

Conveyor Profile Section

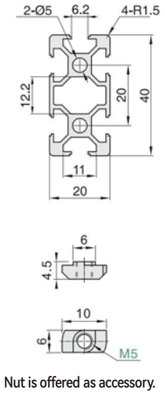

Nut is offered as accessory.

⚠ Nut specification inside aluminum profile slot: Basis on L (Roller center distance)

250~999	1000~1499	1500~	Position	Spec	Status
16PCS	24PCS	32PCS	—	M5(T type)	Accessory
—	—	—	—	—	—

Controller and outline drawing

Figure 1: KMC speed control type(power supply: DC24V/DC48V)

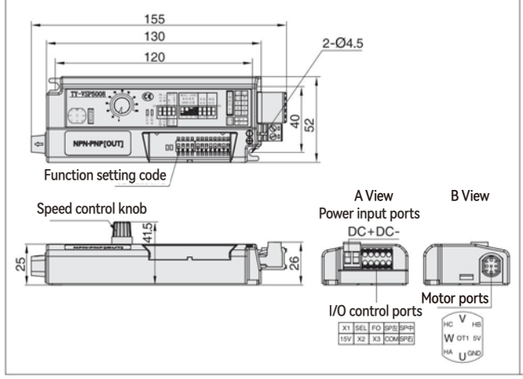

Figure 2: SWS Communication control type (power supply: DC24V/DC48V)

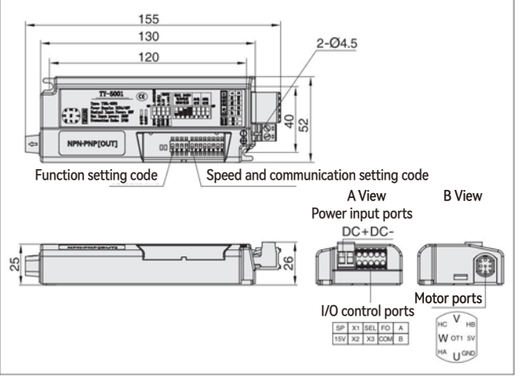

Belt Specification

Underlying Parameter			
• Material:PU • Thickness:0.9mm • Color:Blackish green • Character:General	• Material:PU • Thickness:0.9mm • Color:Bright green • Character:General	• Material:PU • Thickness:0.8mm • Color:Black • Character:ESD	• Material:PU • Thickness:1.0mm • Color:Blackish green • Character:ESD
H	H6	D	D9
Underlying Parameter			
• Material:PU • Thickness:1.2mm • Color:White • Character:Food grade	• Material:PU • Thickness:1.0mm • Color:Bright green • Character:Incline	•Material:PVC •Thickness:1.2mm •Color:Yellow •Character:Special	•Material:PVC •Thickness:1.2mm •Color:Red •Character:Special
F	Q2	Y2	R

onveyor for labelling process

Product Application Case

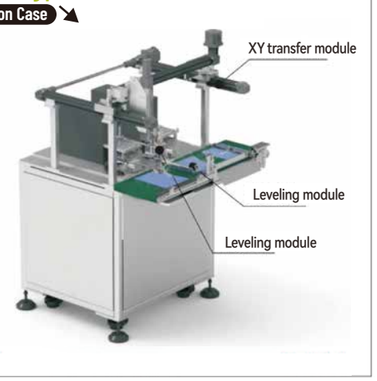

Three Slots Aluminum Profilee

Conveyor Features

Motor is inserted in drive roller to save space, for medium load.



Conveyor Dimensions

Motor Specification : 30W ← Motion Direction

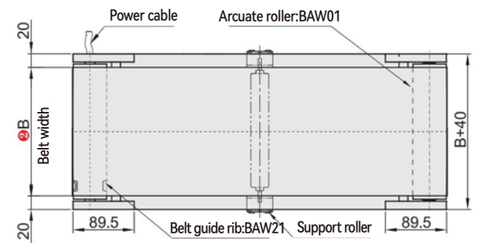

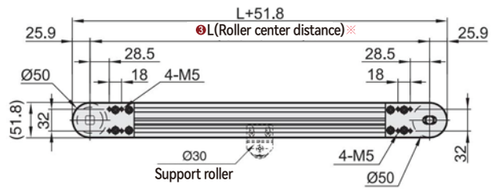

⚠ Above conveyor dimensions is basis on belt thickness H(0.9mm).

Conveyor Profile Section

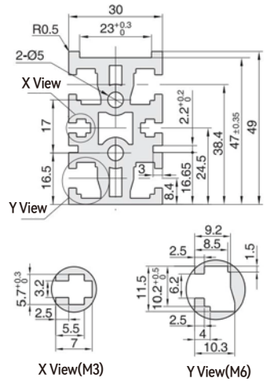

Nut is offered as accessory.



⚠ Nut specification inside aluminum profile slot:
Basis on L (Roller center distance)

300~999	1000~1499	1500~	Position	Spec	Status
4PCS	6PCS	8PCS	X View	M3 (hexagonal)	Accessory
4PCS	6PCS	8PCS	Y View	M6(square)	Accessory

Controller and outline drawing

Figure 1: KMC speed control type(power supply: DC24V/DC48V)

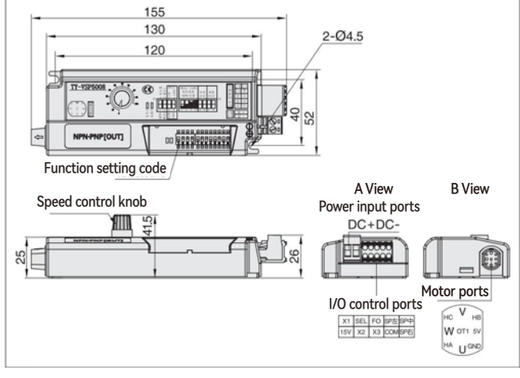

Figure 2: SWS Communication control type (power supply: DC24V/DC48V)

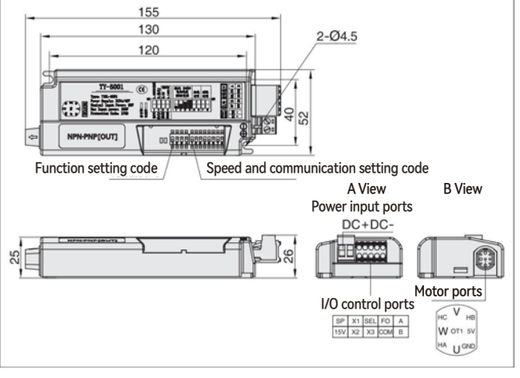

※ Please do not exceed the allowed conveyor load and length. Belt thickness should be smaller than 1.2mm due to belt roller diameter.

Series Code	Type	※ Conveyor Features		Material			Surface Treatment		
		Application Features	Motion Features	Aluminum Profile	Motor Cover	Pulley Mounting Board	Aluminum Profile	Motor Cover	Pulley Mounting Board
BAW01	Arcuate roller to avoid belt shift	Belt with good flatness	One-way transfer	Alloy			Surface electrophoresis	Painting	
BAW21	Belt guide rib to avoid belt shift	Belt runs stable, but guide rib may be slight protrusion.	Forward/Reverse transfer						

Model		❸L-Conveyor Length 5mm	Motor Options				❽ Belt Speciation	❾ Motor Brand
❶ Series Code	❷B-Belt Width		❹ Output Power(W)	❺ Voltage(V)	❻ Motor Type	❼ Speed Range(m/min)		
BAW01 Arcuate roller	250 300 350 400	300~2000	80	DC24 DC DC48 DC	KMC Speed adjustable motor SWS Motor with drive	10 (0~10m/min) 20 (0~20m/min) 30 (0~30m/min) 40 (0~40m/min)	H(Blackish green) H6(Bright green) D(Black-ESD) D9(Blackish green-ESD) F(White-Food grade) Q2(Green-incline application) Y2(Yellow- Special type) R(Red- Special type)	B(BOZ
BAW21 Belt with guide rib	300 350 400 450	350~2000				⚠ Recommend speed control range within 20% during application.		⚠ Motor build-in drive roller

Model code example	Conveyor Model	Belt Width	Conveyor Length	Output Power	Voltage	Control Method	Ratio	Belt Type	Motor Brand
"—"									
Speed adjustable motor	BAW01–	B250 –	L1000 –	80 –	DC24 –	KMC –	30 –	H –	B
Model code example	Conveyor Model	Belt Width	Conveyor Length	Motor series	Control Method	Output torque	Drive type	Belt Type	Motor Brand
"—"									
Stepper motor	BAW21–	B300 –	L1000 –	80 –	DC48 –	KMC –	30 –	H –	B
Model code example	Conveyor Model	Belt Width	Conveyor Length	Inertia	Voltage	Output power	Drive type	Belt Type	Motor Brand
"—"									
Servo motor	BAW21–	B300 –	L1000 –	80 –	DC24 –	SWS –	30 –	H –	B

Model	B	L300 ↕ 400	L405 ↕ 500	L505 ↕ 600	L605 ↕ 700	L705 ↕ 800	L805 ↕ 2000
BAW01 BAW21	250	●	●	●	●	●	●
	300	●	●	●	●	●	●
	350	—	—	●	●	●	●
	400	—	—	—	●	●	●
	—	—	—	—	—	—	—	—

Belt Specification

Underlying Parameter			
• Material:PU • Thickness:0.9mm • Color:Blackish green • Character:General	• Material:PU • Thickness:0.9mm • Color:Bright green • Character:General	• Material:PU • Thickness:0.8mm • Color:Black • Character:ESD	• Material:PU • Thickness:1.0mm • Color:Blackish green • Character:ESD
H	H6	D	D9
Underlying Parameter			
• Material:PU • Thickness:1.2mm • Color:White • Character:Food grade	• Material:PU • Thickness:1.0mm • Color:Bright green • Character:Incline	•Material:PVC •Thickness:2.0mm •Color:Yellow •Character:Special	•Material:PVC •Thickness:2.0mm •Color:Red •Character:Special
F	Q2	Y1	R1

Conveyor for parts feeding

Product Application Case

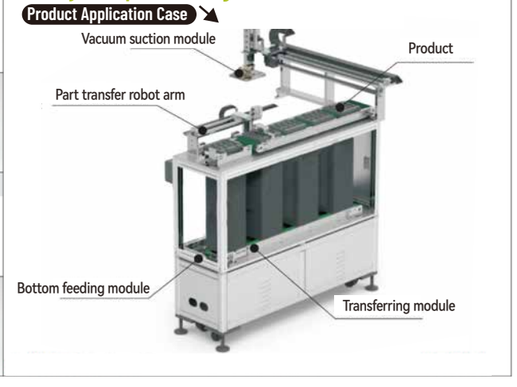

Three Slots Aluminum Profilee

Conveyor Features

Motor is inserted in drive roller to save space, for medium load.



※ Please do not exceed the allowed conveyor load and length. Belt thickness should be smaller than 1.2mm due to belt roller diameter.

Series Code	Type	※ Conveyor Features		Material			Surface Treatment		
		Application Features	Motion Features	Aluminum Profile	Motor Cover	Pulley Mounting Board	Aluminum Profile	Motor Cover	Pulley Mounting Board
BAW31	Arcuate roller to avoid belt shift	Belt with good flatness	One-way transfer	Alloy			Surface electrophoresis	Painting	
BAW51	Belt guide rib to avoid belt shift	Belt runs stable, but guide rib may be slight protrusion.	Forward/Reverse transfer						

Model		❸L-Conveyor Length 5mm	Motor Options				❽ Belt Speciation	❾ Motor Brand
❶ Series Code	❷B-Belt Width		❹ Output Power(W)	❺ Voltage(V)	❻ Motor Type	❼ Speed Range(m/min)		
BAW31 Arcuate roller	250 300 350 400	300~2000	80	DC24 DC DC48 DC	KMC Speed adjustable motor SWS Motor with drive	10 (0~10m/min) 20 (0~20m/min) 30 (0~30m/min) 40 (0~40m/min)	H(Blackish green) H6(Bright green) D(Black-ESD) D9(Blackish green-ESD) F(White-Food grade) Q2(Green-incline application) Y2(Yellow- Special type) R(Red- Special type)	B(BOZ
BAW51 Belt with guide rib	350 400 450 500	400~2000						

⚠ Recommend speed control range within 20% during application.

⚠ Motor build-in drive roller

Model code example	Conveyor Model	Belt Width	Conveyor Length	Output Power	Voltage	Control Method	Ratio	Belt Type	Motor Brand
Speed adjustable motor	BAW31–	B250 –	L1000 –	80 –	DC24 –	KMC –	30 –	H –	B
Model code example	Conveyor Model	Belt Width	Conveyor Length	Motor series	Control Method	Output torque	Drive type	Belt Type	Motor Brand
Stepper motor	BAW51–	B350 –	L1000 –	80 –	DC48 –	KMC –	30 –	H –	B
Model code example	Conveyor Model	Belt Width	Conveyor Length	Inertia	Voltage	Output power	Drive type	Belt Type	Motor Brand
Servo motor	BAW51–	B350 –	L1000 –	80 –	DC24 –	SWS –	30 –	H –	B

Recommend belt width and conveyor length

Model	B	L300 ~ 400	L405 ~ 500	L505 ~ 600	L605 ~ 700	L705 ~ 800	L805 ~ 2000
BAW31 BAW51	250	●	●	●	●	●	●
	300	●	●	●	●	●	●
	350	—	—	●	●	●	●
	400	—	—	—	●	●	●
	—	—	—	—	—	—	—

Conveyor Dimensions

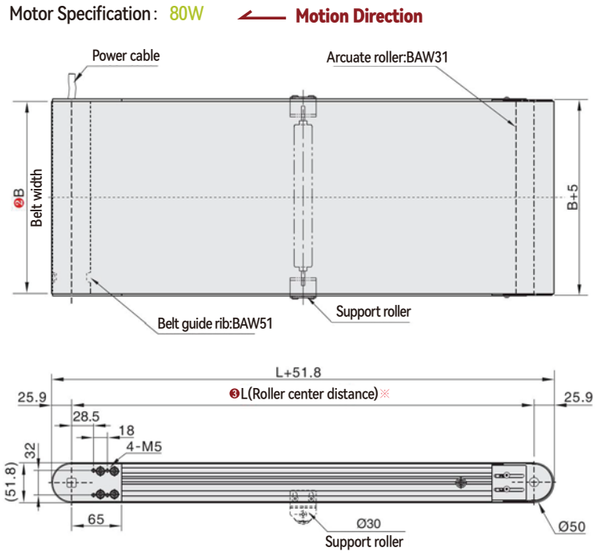

⚠ Above conveyor dimensions is basis on belt thickness H(0.9mm).

Conveyor Profile Section

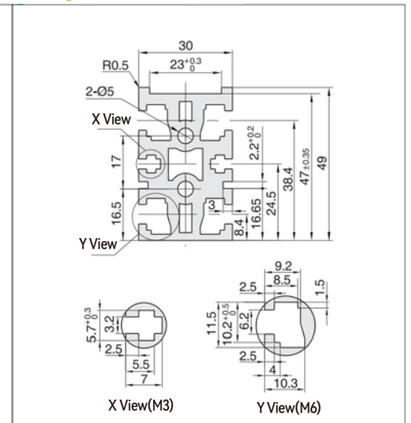

Nut is offered as accessory.



⚠ Nut specification inside aluminum profile slot: Basis on L (Roller center distance)

300~999	1000~1499	1500~	Position	Spec	Status
4PCS	6PCS	8PCS	X View	M3 (hexagonal)	Accessory
4PCS	6PCS	8PCS	Y View	M6(square)	Accessory

Controller and outline drawing

Figure 1: KMC speed control type(power supply: DC24V/DC48V)

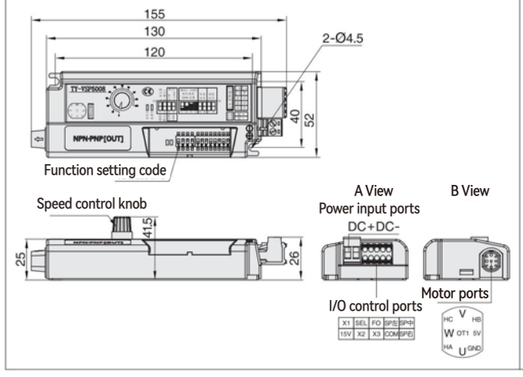

Figure 2: SWS Communication control type (power supply: DC24V/DC48V)

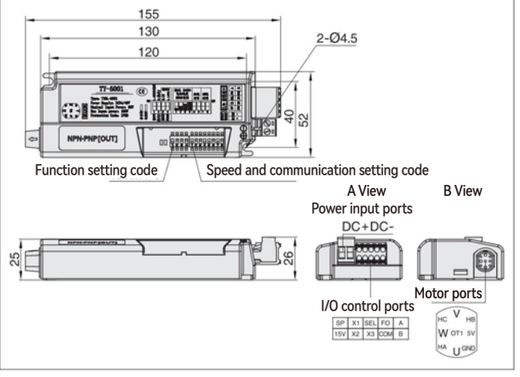

Belt Specification

Underlying Parameter			
• Material:PU • Thickness:0.9mm • Color:Blackish green • Character:General	• Material:PU • Thickness:0.9mm • Color:Bright green • Character:General	• Material:PU • Thickness:0.8mm • Color:Black • Character:ESD	• Material:PU • Thickness:1.0mm • Color:Blackish green • Character:ESD
H	H6	D	D9
Underlying Parameter			
• Material:PU • Thickness:1.2mm • Color:White • Character:Food grade	• Material:PU • Thickness:1.0mm • Color:Bright green • Character:Incline	• Material:PVC • Thickness:2.0mm • Color:Yellow • Character:Special	• Material:PVC • Thickness:2.0mm • Color:Red • Character:Special
F	Q2	Y1	R1

Conveyor for parts feeding

Product Application Case

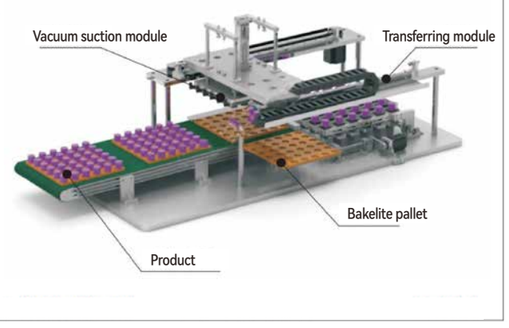

Three Slots Aluminum Profilee

Conveyor Features

Motor is inserted in drive roller to save space, for big load.



※ Please do not exceed the allowed conveyor load and length. Belt thickness should be smaller than 2.0mm due to belt roller diameter.

Series Code	Type	※ Conveyor Features		Material			Surface Treatment		
		Application Features	Motion Features	Aluminum Profile	Motor Cover	Pulley Mounting Board	Aluminum Profile	Motor Cover	Pulley Mounting Board
BAL01	Arcuate roller to avoid belt shift	Belt with good flatness	One-way transfer	Alloy			Surface anodizing	Painting	
BAL21	Belt guide rib to avoid belt shift	Belt runs stable, but guide rib may be slight protrusion.	Forward/Reverse transfer						

Model		❸L-Conveyor Length 5mm	Motor Options				❽ Belt Speciation	❾ Motor Brand
❶ Series Code	❷B-Belt Width		❹ Output Power(W)	❺ Voltage(V)	❻ Motor Type	❼ Speed Range(m/min)		
BAL01 Arcuate roller	250 300 350 400 450 500	300~3000	120	DC24 DC DC48 DC	KMC Speed adjustable motor SWS Motor with drive	10 (0~10m/min) 20 (0~20m/min) 30 (0~30m/min) 40 (0~40m/min)	H(Blackish green) H6(Bright green) D(Black-ESD) D9(Blackish green-ESD) F(White-Food grade) Q2(Green-incline application) Y2(Yellow- Special type) R(Red- Special type)	B(BOZ
BAL21 Belt with guide rib	300 350 400 450 500	350~3000				⚠ Recommend speed control range within 20% during application.		⚠ Motor build-in drive roller

Model code example									
"—" Model code example	Conveyor Model	Belt Width	Conveyor Length	Output Power	Voltage	Control Method	Ratio	Belt Type	Motor Brand
Speed adjustable motor	BAL01–	B250	– L1000	– 120	– DC24	– KMC	– 40	– H	– B
"—" Model code example	Conveyor Model	Belt Width	Conveyor Length	Motor series	Control Method	Output torque	Drive type	Belt Type	Motor Brand
Stepper motor	BAL21–	B300	– L1000	– 120	– DC48	– KMC	– 40	– H	– B
"—" Model code example	Conveyor Model	Belt Width	Conveyor Length	Inertia	Voltage	Output power	Drive type	Belt Type	Motor Brand
Servo motor	BAL21–	B300	– L1000	– 120	– DC48	– SWS	– 40	– H	– B

Recommend belt width and conveyor length							
Model	B	L300 ≀ 400	L405 ≀ 500	L505 ≀ 600	L605 ≀ 700	L705 ≀ 800	L805 ≀ 3000
BAL01 BAL21	250	●	●	●	●	●	●
	300	●	●	●	●	●	●
	350	—	—	●	●	●	●
	400	—	—	—	●	●	●
	450	—	—	—	●	●	●
	500	—	—	—	●	●	●

Conveyor Dimensions

Motor Specification: 120W ⟵ Motion Direction

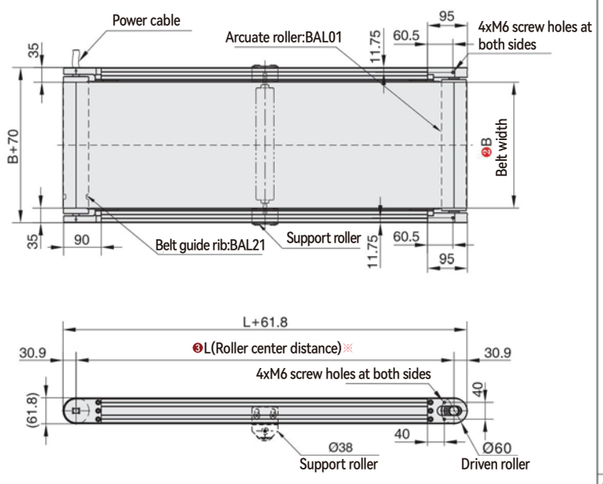

⚠ Above conveyor dimensions is basis on belt thickness H(0.9mm).

Conveyor Profile Section

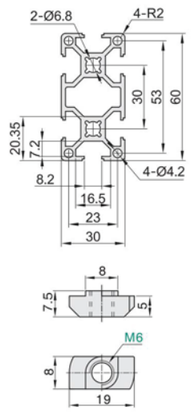

Nut is offered as accessory.

⚠ Nut specification inside aluminum profile slot:
Basis on L (Roller center distance)

300~999	1000~1499	1500~	Position	Spec	Status
16PCS	24PCS	32PCS	—	M6(T type)	Accessory
—	—	—	—	—	—

Controller and outline drawing

Figure 1: KMC speed control type(power supply: DC24V/DC48V)

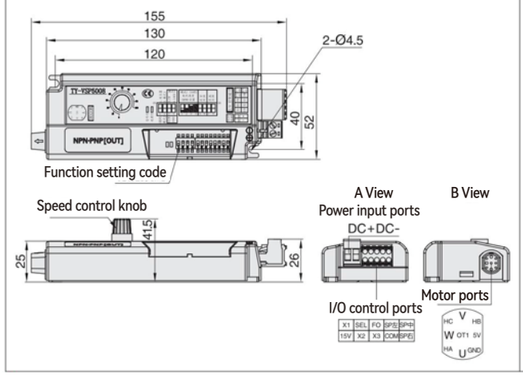

Figure 2: SWS Communication control type (power supply: DC24V/DC48V)

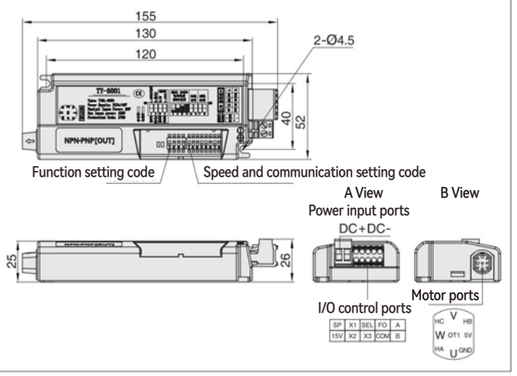

Belt Specification

Underlying Parameter			
• Material:PU • Thickness:0.9mm • Color:Blackish green • Character:General	• Material:PU • Thickness:0.9mm • Color:Bright green • Character:General	• Material:PU • Thickness:0.8mm • Color:Black • Character:ESD	• Material:PU • Thickness:1.0mm • Color:Blackish green • Character:ESD
H	H6	D	D9
Underlying Parameter			
• Material:PU • Thickness:1.2mm • Color:White • Character:Food grade	• Material:PU • Thickness:1.0mm • Color:Bright green • Character:Incline	• Material:PVC • Thickness:2.0mm • Color:Yellow • Character:Special	• Material:PVC • Thickness:2.0mm • Color:Red • Character:Special
F1	Q2	Y1	R1

Conveyor for parts feeding

Product Application Case



Dual Slots Aluminum Profilee



Conveyor Features

Motor is inserted in drive roller to save space, with overall belt, for big load.

※ Please do not exceed the allowed conveyor load and length. Belt thickness should be smaller than 2.0mm due to belt roller diameter.

Series Code	Type	※ Conveyor Features		Material			Surface Treatment		
		Application Features	Motion Features	Aluminum Profile	Motor Cover	Pulley Mounting Board	Aluminum Profile	Motor Cover	Pulley Mounting Board
BAL31	Arcuate roller to avoid belt shift	Belt with good flatness	One-way transfer	Alloy			Surface anodizing	Painting	
BAL51	Belt guide rib to avoid belt shift	Belt runs stable, but guide rib may be slight protrusion.	Forward/Reverse transfer						

Model		❸L-Conveyor Length 5mm	Motor Options				❽ Belt Speciation	❾ Motor Brand
❶ Series Code	❷B-Belt Width		❹ Output Power(W)	❺ Voltage(V)	❻ Motor Type	❼ Speed Range(m/min)		
BAL31 Arcuate roller	300 350 400 450 500	350~3000	120	DC24 DC DC48 DC	KMC Speed adjustable motor SWS Motor with drive	10 (0~10m/min) 20 (0~20m/min) 30 (0~30m/min) 40 (0~40m/min)	H(Blackish green) H6(Bright green) D(Black-ESD) D9(Blackish green-ESD) F(White-Food grade) Q2(Green-incline application) Y2(Yellow- Special type) R(Red- Special type)	B(BOZ
BAL51 Belt with guide rib	400 450 500 550	600~3000				⚠ Recommend speed control range within 20% during application.		⚠ Motor build-in drive roller

Model code example									
"—" Model code example	Conveyor Model	Belt Width	Conveyor Length	Output Power	Voltage	Control Method	Ratio	Belt Type	Motor Brand
Speed adjustable motor	BAL31–	B300	– L1000	– 120	– DC24	– KMC	– 40	– H	– B
"—" Model code example	Conveyor Model	Belt Width	Conveyor Length	Motor series	Control Method	Output torque	Drive type	Belt Type	Motor Brand
Stepper motor	BAL51–	B400	– L1000	– 120	– DC48	– KMC	– 40	– H	– B
"—" Model code example	Conveyor Model	Belt Width	Conveyor Length	Inertia	Voltage	Output power	Drive type	Belt Type	Motor Brand
Servo motor	BAL51–	B400	– L1000	– 120	– DC48	– SWS	– 40	– H	– B

Recommend belt width and conveyor length							
Model	B	L350 ≀ 400	L405 ≀ 500	L505 ≀ 600	L605 ≀ 700	L705 ≀ 800	L805 ≀ 3000
BAL31 BAL51	250	●	●	●	●	●	●
	300	●	●	●	●	●	●
	350	—	—	●	●	●	●
	400	—	—	—	●	●	●
	450	—	—	—	●	●	●
	500	—	—	—	●	●	●

Conveyor Dimensions

Motor Specification: 120W ⟵ Motion Direction

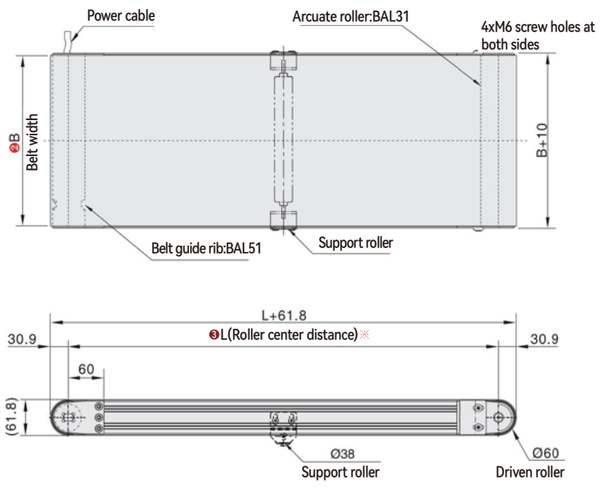

⚠ Above conveyor dimensions is basis on belt thickness H(0.9mm).

Conveyor Profile Section

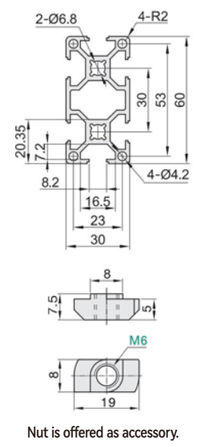

Nut is offered as accessory.

⚠ Nut specification inside aluminum profile slot: Basis on L (Roller center distance)

350~999	1000~1499	1500~	Position	Spec	Status
16PCS	24PCS	32PCS	—	M6(T type)	Accessory
—	—	—	—	—	—

Controller and outline drawing

Figure 1: KMC speed control type(power supply: DC24V/DC48V)

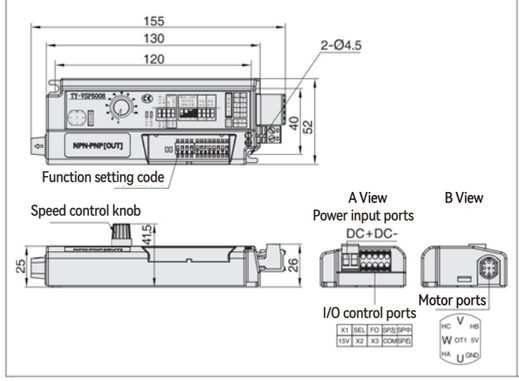

Figure 2: SWS Communication control type (power supply: DC24V/DC48V)

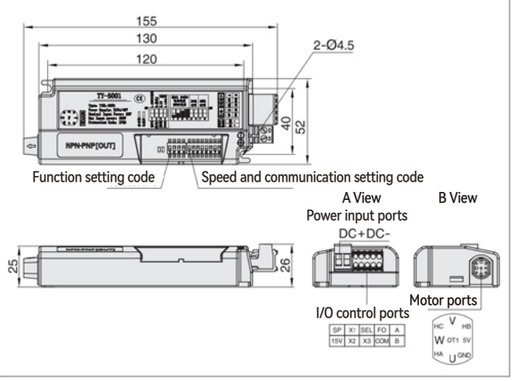

Belt Specification

Underlying Parameter			
• Material:PU • Thickness:0.9mm • Color:Blackish green • Character:General	• Material:PU • Thickness:0.9mm • Color:Bright green • Character:General	• Material:PU • Thickness:0.8mm • Color:Black • Character:ESD	• Material:PU • Thickness:1.0mm • Color:Blackish green • Character:ESD
H	H6	D	D9
Underlying Parameter			
• Material:PU • Thickness:1.2mm • Color:White • Character:Food grade	• Material:PU • Thickness:1.0mm • Color:Bright green • Character:Incline	• Material:PVC • Thickness:2.0mm • Color:Yellow • Character:Special	• Material:PVC • Thickness:2.0mm • Color:Red • Character:Special
F1	Q2	Y1	R1

Product infeed and outfeed conveyor system

Product Application Case



Three Slots Aluminum Profilee



Conveyor Features

Motor is inserted in drive roller to save space, for small load.

※ Please do not exceed the allowed conveyor load and length. Belt thickness should be smaller than 2.0mm due to belt roller diameter.

Series Code	Type	※ Conveyor Features		Material			Surface Treatment		
		Application Features	Motion Features	Aluminum Profile	Motor Cover	Pulley Mounting Board	Aluminum Profile	Motor Cover	Pulley Mounting Board
BAQ01	Belt guide rib to avoid belt shift	Belt runs stable, but guide rib may be slight protrusion.	Forward Reverse transfer	Alloy			Surface electrophoresis	Painting	

Model		❸L-Conveyor Length 5mm	Motor Options				❽ Belt Speciation	❾ Motor Brand
❶ Series Code	❷B-Belt Width		❹ Output Power(W)	❺ Voltage(V)	❻ Motor Type	❼ Speed Range(m/min)		
BAQ01 Arcuate roller	60 100 Min.Step (5:mm)	415~2000	6	TA220 Single phase	IM Fix-speed motor SCM Speed adjustable motor	5 7.5 10 12.5 15 18 25 30 36 50 60 75 90 100 120 150 180 ⚠ When motor power is 6W gear box ratio can not be 5~10.	H(Blackish green) H6(Bright green) D(Black-ESD) D9(Blackish green-ESD) F(White-Food grade) Q2(Green-incline application) Y1(Yellow- Special type) R(Red- Special type)	GPG JSCC No motor
			25	DC24 DC TA220 Single phase	KMC Speed adjustable motor SWS Motor with drive			ZD No motor
			❹ Motor Series	❺ Control method	❻ Output torque	❼ Drive type		❾ Stepper motor brand
			57 series stepper motor	CM Open loop CME Closed loop	23 26 31	MC Pulse type IO IO type EC IO typeEtherCAT RS RS485 ⚠ Default type: pulse type		S(Leadshine) No motor
			❹ Inertia	❺ Voltage(V)	❻ Output power			❾ Servo motor brand
			MH Servo motor	TA220 Single phase	200W			S(Leadshine) X(Panasonic) No motor

⚠ ※Recommend motor brand JSCC

Model code example									
"—" Model code example	Conveyor Model	Belt Width	Conveyor Length	Output Power	Voltage	Control Method	Ratio	Belt Type	Motor Brand
Speed adjustable motor	BAQ01–	B100	– L800	– 6	– TA220	– SCM	– 12.5	– H	– G
"—" Model code example	Conveyor Model	Belt Width	Conveyor Length	Motor series	Control Method	Output torque	Drive type	Belt Type	Motor Brand
Stepper motor	BAQ01–	B100	– L800	– 57	– CM	– 23	– MC	– H	– S
"—" Model code example	Conveyor Model	Belt Width	Conveyor Length	Inertia	Voltage	Output power	Drive type	Belt Type	Motor Brand
Servo motor	BAQ01–	B100	– L800	– MH	– TA220	– 200W	– EC	– H	– X

Recommend belt width and conveyor length							
Model	B	L415 ~ 500	L505 ~ 600	L605 ~ 800	L805 ~ 900	L905 ~ 1000	L1005 ~ 2000
BAQ01	60	●	●	●	●	●	●
	100	—	●	●	●	●	●
	150	—	●	●	●	●	●
	200	—	●	●	●	●	●
	—	—	—	—	—	—	—

Conveyor Dimensions

Motor Specification: 6W ⟵ Motion Direction

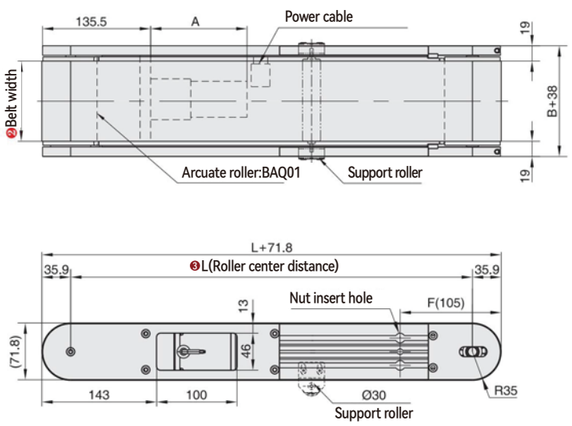

⚠ Above conveyor dimensions is basis on belt thickness H(0.9mm).

Conveyor Profile Section

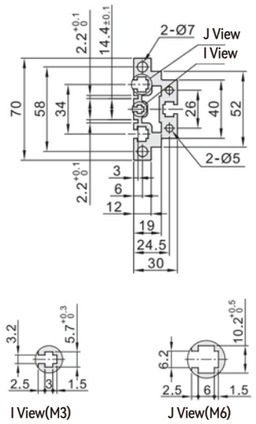

⚠ Nut specification inside aluminum profile slot:
Basis on L (Roller center distance)

415~999	1000~1499	1500~	Position	Spec	Status
4PCS	6PCS	8PCS	I View	M3 (hexagonal)	Accessory
4PCS	6PCS	8PCS	J View	M6(square)	Accessory

Conveyor speed and load capability

Form 1: Gear box ratio and conveyor speed(m/min)

Gear box radio	Fix-speed motor Speed(m/min)	Speed adjustable motor Speed(m/min)	Frequency motor Speed(m/min)	Brushless motor Speed(m/min)
5	—	—	—	0~131.9
7.5	—	—	—	0~87.9
10	—	—	—	0~65.9
12.5	23.7	14.2~23.7	—	0~52.8
15	19.8	11.9~19.8	—	0~44.0
18	16.5	9.9~16.5	—	0~36.6
25	11.9	7.1~11.9	—	0~26.4
30	9.9	5.9~9.9	—	0~22.0
36	8.2	4.9~8.2	—	0~18.3
50	5.9	3.6~5.9	—	0~13.2
60	4.9	3.0~4.9	—	0~11.0

Form 2: Pulse quality and conveyor speed(m/min)

Pulse quantity	Conveyor speed(m/min)	57 series stepper motor torque 2.3N.m	2.6N.m	3.1N.m	—	—	—	—
400	26.4	0~7.3	0~8.2	0~9.9	—	—	—	—
800	52.8	0~3.6	0~4.1	0~4.9	—	—	—	—
1600	105.5	0~1.8	0~2.1	0~2.5	—	—	—	—
3200	211.0	0~0.9	0~1.0	0~1.2	—	—	—	—
6400	422.0	0~0.5	0~0.5	0~0.6	—	—	—	—
12800	844.0	—	—	—	—	—	—	—
25600	1688.0	—	—	—	—	—	—	—
51200	3376.0	—	—	—	—	—	—	—

Instrument 1.Set the current as default 2.Set the code on motor drive
3.Default torque can be modified by current setting.

⚠ Test Condition:B=100 L=800

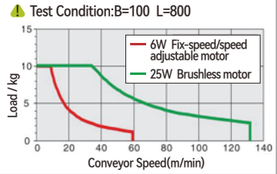

⚠ Speed calculation formula

1.Drive roller diameter D=70mm
2.Speed adjustable motor RPM=1350r/min
3.Frequency motor RPM=1680r/min
4.Brushless motor RPM=3000r/min
5.Belt pulley ratio i2=1:1

$$S=\frac{D\times\pi\times R\times i2}{i1\times1000}$$

$$S=\frac{70\times3.14\times1350\times1}{12.5\times1000}$$

S=23.738m/min

⚠ Test Condition:B=100 L=800 Current:5A

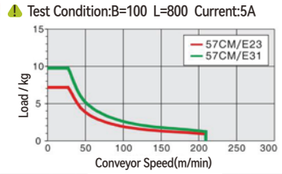

⚠ Speed calculation formula

1.Drive roller diameter D=70mm
2.Pulse quantity=400
3.Stepper motor angle J=1.8°
4.Belt pulley ratio i2=1:1

$$S=\frac{D\times\pi\times(M\times J/360\times60)\times i_2}{1000}$$

$$S=\frac{70\times3.14\times(400\times1.8/360\times60)\times1}{1000}$$

S=26.4m/min

Belt Specification

Underlying Parameter			
• Material:PU • Thickness:0.9mm • Color:Blackish green • Character:General	• Material:PU • Thickness:0.9mm • Color:Bright green • Character:General	• Material:PU • Thickness:0.8mm • Color:Black • Character:ESD	• Material:PU • Thickness:1.0mm • Color:Blackish green • Character:ESD
H	H6	D	D9
Underlying Parameter			
• Material:PU • Thickness:1.2mm • Color:White • Character:Food grade	• Material:PU • Thickness:1.0mm • Color:Bright green • Character:Incline	• Material:PVC • Thickness:2.0mm • Color:Yellow • Character:Special	• Material:PVC • Thickness:2.0mm • Color:Red • Character:Special
F	Q2	Y1	R1

Build-in drive belt conveyor for small and narrow space.

Product Application Case

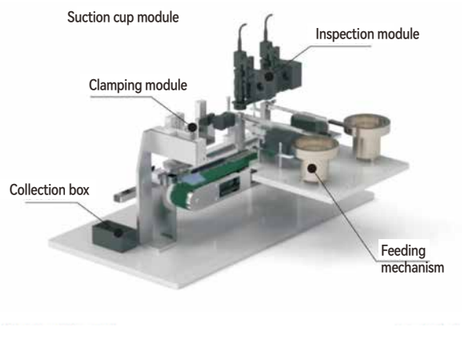

Dual Slots Aluminum Profilee



Conveyor Features

Motor is inserted in drive roller to save space, for big load.

※ Please do not exceed the allowed conveyor load and length. Belt thickness should be smaller than 2.0mm due to belt roller diameter.

Series Code	Type	※ Conveyor Features		Material			Surface Treatment		
		Application Features	Motion Features	Aluminum Profile	Motor Cover	Pulley Mounting Board	Aluminum Profile	Motor Cover	Pulley Mounting Board
BAB01	Arcuate roller to avoid belt shift	Belt with good flatness	One-way transfer	Alloy			Surface anodizing	Painting	
BAB21	Belt guide rib to avoid belt shift	Belt runs stable, but guide rib may be slight protrusion.	Forward/Reverse transfer						

Model		❸L-Conveyor Length 5mm	Motor Options				❽ Belt Speciation	❾ Motor Brand
❶ Series Code	❷B-Belt Width		❹ Output Power(W)	❺ Voltage(V)	❻ Motor Type	❼ Speed Range(m/min)		
BAB01 Arcuate roller BAB21 Belt with guide rib	300 400 500 600 700 800	400~3000	220	DC24 DC DC48 DC	KMC Speed adjustable motor SWS Motor with drive	12 (0~12m/min) 25 (0~25m/min) 40 (0~40m/min) 50 (0~50m/min) ⚠ Recommend speed control range within 20% during application.	H1(Blackish green) H2(green) D7(Black-ESD) D10(Bright green-ESD) F1(White-Food grade) W8(Blue-Anti slip) Y1(Yellow- Special type) R1(Red- Special type)	B(BOZ ⚠ Motor build-in drive roller

Model code example									
"—" Model code example	Conveyor Model	Belt Width	Conveyor Length	Output Power	Voltage	Control Method	Ratio	Belt Type	Motor Brand
Speed adjustable motor	BAB01–	B300 –	L1000 –	220 –	DC24 –	KMC –	50 –	H1 –	B
"—" Model code example	Conveyor Model	Belt Width	Conveyor Length	Motor series	Control Method	Output torque	Drive type	Belt Type	Motor Brand
Stepper motor	BAB21–	B300 –	L1000 –	220 –	DC48 –	KMC –	50 –	H1 –	B
"—" Model code example	Conveyor Model	Belt Width	Conveyor Length	Inertia	Voltage	Output power	Drive type	Belt Type	Motor Brand
Servo motor	BAB21–	B300 –	L1000 –	220 –	DC48 –	SWS –	50 –	H1 –	B

Recommend belt width and conveyor length								
Model	B	L400 ≀ 500	L505 ≀ 600	L605 ≀ 700	L705 ≀ 800	L805 ≀ 1000	L1005 ≀ 3000
BAB01 BAB21	300	●	●	●	●	●	●
	400	●	●	●	●	●	●
	500	—	—	●	●	●	●
	600	—	—	—	●	●	●
	700	—	—	—	—	●	●
	800	—	—	—	—	—	●

Conveyor Dimensions

Motor Specification: 220W ⟵ Motion Direction

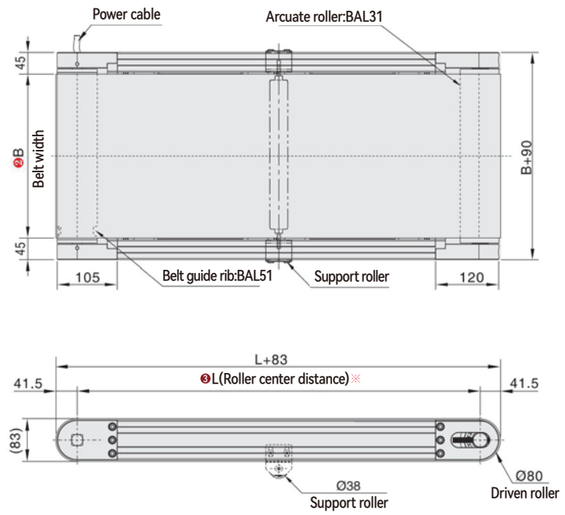

⚠ Above conveyor dimensions is basis on belt thickness H1(1.5mm).

Conveyor Profile Section

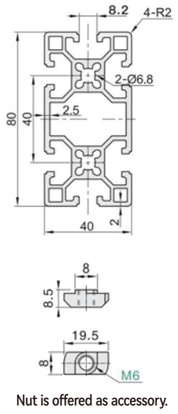

Nut is offered as accessory.

⚠ Nut specification inside aluminum profile slot: Basis on L (Roller center distance)

400~999	1000~1499	1500~	Position	Spec	Status
16PCS	24PCS	32PCS	—	M6(T type)	Accessory
—	—	—	—	—	—

Controller and outline drawing

Figure 1: KMC speed control type(power supply: DC24V/DC48V)

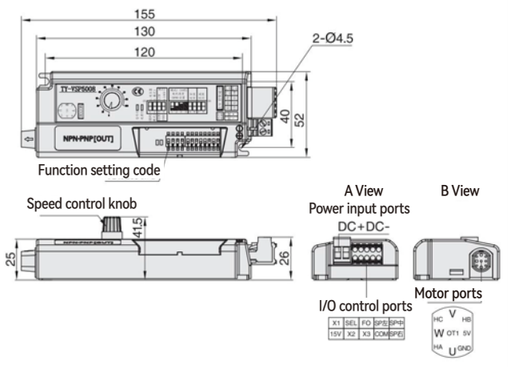

Figure 2: SWS Communication control type (power supply: DC24V/DC48V)

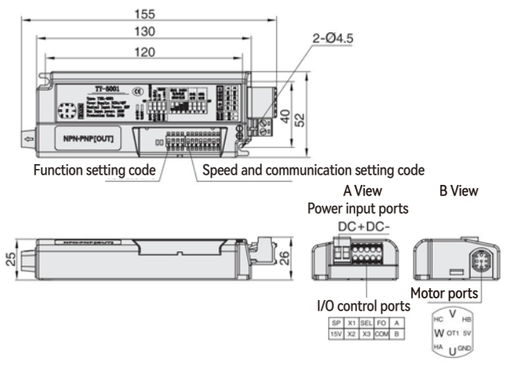

Belt Specification

Underlying Parameter			
• Material:PU • Thickness:1.8mm • Color:Blackish green • Character:General	• Material:PVC • Thickness:2.0mm • Color:Green • Character:General	• Material:PU • Thickness:1.5mm • Color:Black • Character:ESD	• Material:PVC • Thickness:2.0mm • Color:Green • Character:ESD
H1	H2	D7	D10
Underlying Parameter			
• Material:PU • Thickness:1.5mm • Color:White • Character:Food grade	• Material:PU • Thickness:1.8 mm • Color:Blue • Character:Anti-slip	•Material:PVC •Thickness:2.0mm •Color:Yellow •Character:Special	•Material:PVC •Thickness:2.0mm •Color:Red •Character:Special
F1	W8	Y1	R1

Conveyor with product guide profile and sensor for stepping transferring and positioning. Product Application Case

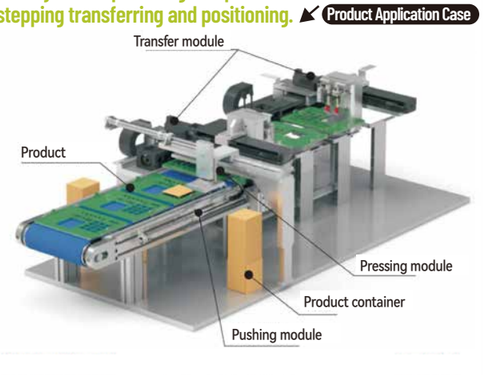

Dual Slots Aluminum Profilee

Conveyor Features

Motor is inserted in drive roller to save space, with overall belt, for big load.



Conveyor Dimensions

Motor Specification: 220W ← Motion Direction

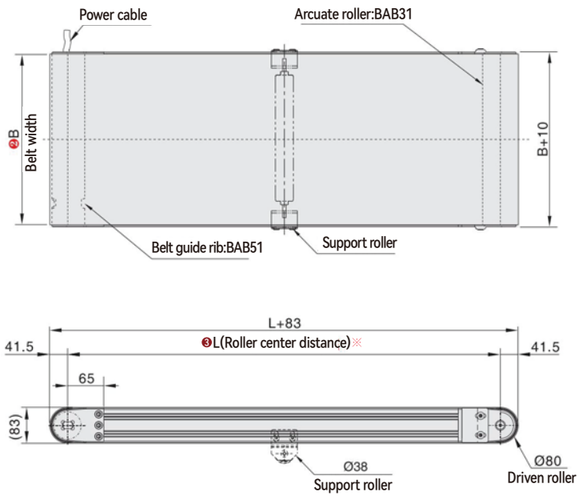

⚠ Above conveyor dimensions is basis on belt thickness H1(1.5mm).

Conveyor Profile Section

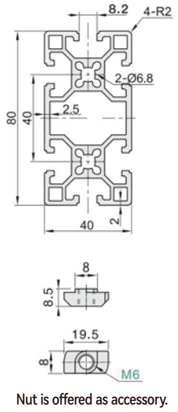

Nut is offered as accessory.

⚠ Nut specification inside aluminum profile slot:
Basis on L (Roller center distance)

400~999	1000~1499	1500~	Position	Spec	Status
16PCS	24PCS	32PCS	—	M6(T type)	Accessory
—	—	—	—	—	—

Controller and outline drawing

Figure 1: KMC speed control type(power supply: DC24V/DC48V)

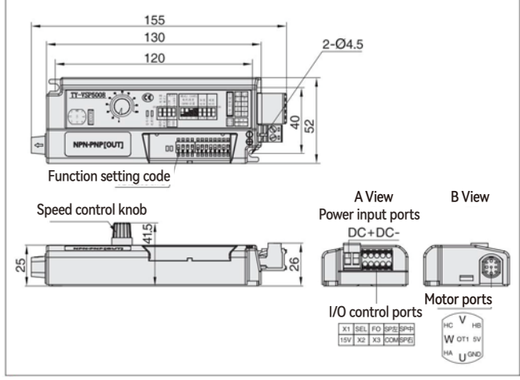

Figure 2: SWS Communication control type (power supply: DC24V/DC48V)

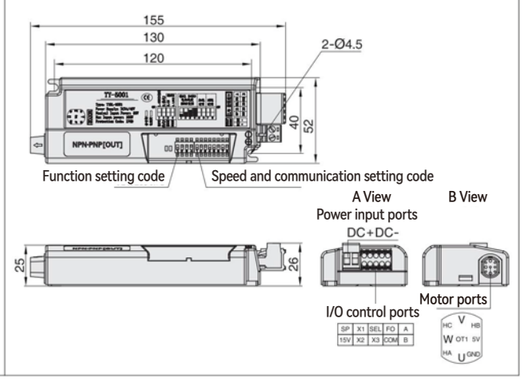

※ Please do not exceed the allowed conveyor load and length. Belt thickness should be smaller than 2.0mm due to belt roller diameter.

Series Code	Type	※ Conveyor Features		Material			Surface Treatment		
		Application Features	Motion Features	Aluminum Profile	Motor Cover	Pulley Mounting Board	Aluminum Profile	Motor Cover	Pulley Mounting Board
BAB31	Arcuate roller to avoid belt shift	Belt with good flatness	One-way transfer	Alloy			Surface anodizing	Painting	
BAB51	Belt guide rib to avoid belt shift	Belt runs stable, but guide rib may be slight protrusion.	Forward/Reverse transfer						

Model		❸L-Conveyor Length 5mm	Motor Options				❽ Belt Speciation	❾ Motor Brand
❶ Series Code	❷B-Belt Width		❹ Output Power(W)	❺ Voltage(V)	❻ Motor Type	❼ Speed Range(m/min)		
BAB31 Arcuate roller BAB51 Belt with guide rib	350 400 500 600 700 800	400~3000	220	DC24 DC DC48 DC	KMC Speed adjustable motor SWS Motor with drive	12 (0~12m/min) 25 (0~25m/min) 40 (0~40m/min) 50 (0~50m/min)	H1(Blackish green) H2(green) D7(Black-ESD) D10(Bright green-ESD) F1(White-Food grade) W8(Blue-Anti slip) Y1(Yellow- Special type) R1(Red- Special type)	B(BO
						⚠ Recommend speed control range within 20% during application.		⚠ Motor build-in drive roller

Model code example									
"—" Model code example	Conveyor Model	Belt Width	Conveyor Length	Output Power	Voltage	Control Method	Ratio	Belt Type	Motor Brand
Speed adjustable motor	BAB31	B350	L1000	220	DC24	KMC	50	H1	B
"—" Model code example	Conveyor Model	Belt Width	Conveyor Length	Motor series	Control Method	Output torque	Drive type	Belt Type	Motor Brand
Stepper motor	BAB51	B350	L1000	220	DC48	KMC	50	H1	B
"—" Model code example	Conveyor Model	Belt Width	Conveyor Length	Inertia	Voltage	Output power	Drive type	Belt Type	Motor Brand
Servo motor	BAB51	B350	L1000	220	DC48	SWS	50	H1	B

Recommend belt width and conveyor length							
Model	B	L400~500	L505~600	L605~700	L705~800	L805~1000	L1005~3000
BAB31 BAB51	300	●	●	●	●	●	●
	400	●	●	●	●	●	●
	500	—	—	●	●	●	●
	600	—	—	—	●	●	●
	700	—	—	—	—	●	●
	800	—	—	—	—	—	●

Belt Specification

Underlying Parameter			
• Material:PU • Thickness:1.5mm • Color:Blackish green • Character:General	• Material:PVC • Thickness:2.0mm • Color:Green • Character:General	• Material:PU • Thickness:1.5mm • Color:Black • Character:ESD	• Material:PVC • Thickness:2.0mm • Color:Green • Character:ESD
H1	H2	D7	D10
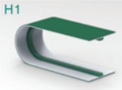	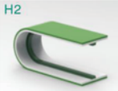		
Underlying Parameter			
• Material:PVC • Thickness:2.0mm • Color:White • Character:Food grade	• Material:PU • Thickness:1.8 mm • Color:Blue • Character:Anti-slip	•Material:PVC •Thickness:2.0mm •Color:Yellow •Character:Special	•Material:PVC •Thickness:2.0mm •Color:Red •Character:Special
F4	W8	Y1	R1
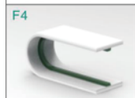	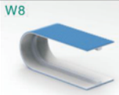	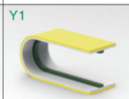	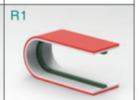

Conveyor with product guide profile and sensor for stepping transferring and positioning. Product Application Case

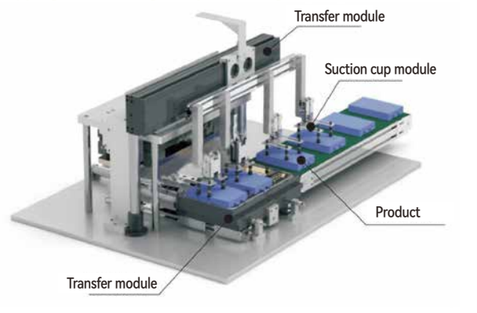

Three Slots Aluminum Profilee



Conveyor Features

Motor is inserted in drive roller to save space, for small to medium load.

※ Please do not exceed the allowed conveyor load and length. Belt thickness should be smaller than 2.0mm due to belt roller diameter.

Series Code	Type	※ Conveyor Features		Material			Surface Treatment		
		Application Features	Motion Features	Aluminum Profile	Motor Cover	Pulley Mounting Board	Aluminum Profile	Motor Cover	Pulley Mounting Board
BDT51	Belt guide rib to avoid belt shift	Belt runs stable, but guide rib may be slight protrusion.	Forward Reverse transfer	Alloy			Surface electrophoresis	Painting	

Model		❸ L-Conveyor Length 5mm	Motor Options				❽ Belt Spec	❾ Motor Brand	❿ Board height	⓫ Motor Brand
❶ Series Code	❷ B-Belt Width		❹ Output Power(W)	❺ Voltage(V)	❻ Motor Type	❼ Gear box ratio				
BDT51 Belt with guide rib	50~300 Min.Step (5mm)	350~2000 Min.Step (5mm)	25 40 60	TA220 Single phase SA220 Three phase	IM Fix-speed motor SCM Speed adjustable motor INV VFD type	5 7.5 10 12.5 15 18 25 30 36 50 60 75 90 100 120 150 180	H1(Blackish green-General) H2(Green-General) D1(Green-ESD) D7(Black -ESD) D14(Blue -ESD) F1(White-Food grade) Y1(Yellow- Special type) R(Red- Special type)	20~150 Board quantity ≤Perimeter (2L+160)/50	10 20 30 40 50 T=5mm board thickness	GPG JSCC No motor ZD No motor ⓫ Stepper motor brand S(Leadshine) No motor ⓫ Servo motor brand S(Leadshine) X(Panasonic) No motor
			❹ Motor Series	❺ Control method	❻ Output torque	❼ Drive type				
			86 series stepper motor	CM Open loop CME Closed loop	45 80 120	MC Pulse type IO IO type EC IO typeEtherCAT RS RS485 Default type: pulse type				
			❹ Inertia	❺ Voltage(V)	❻ Output power					
			MH Servo motor	TA220 Single phase	400W 750W					

※ Recommend motor brand JSCC

Model code example											
"—" Model code example	Conveyor Model	Belt Width	Conveyor Length	Output Power	Voltage	Control Method	Ratio	Belt Type	Motor Brand	Board Height	Motor Brand
Speed adjustable motor	BDT51	B200	L1000	25	TA220	SCM	12.5	H2	S30	H30	G
"—" Model code example	Conveyor Model	Belt Width	Conveyor Length	Motor series	Control Method	Output torque	Drive type	Belt Type	Motor Brand	Board Height	Motor Brand
Stepper motor	BDT51	B200	L1000	86	CM	45	MC	H2	S30	H30	S
"—" Model code example	Conveyor Model	Belt Width	Conveyor Length	Inertia	Voltage	Output power	Drive type	Belt Type	Motor Brand	Board Height	Motor Brand
Servo motor	BDT51	B200	L1000	MH	TA220	400W	EC	H2	S30	H30	X

Conveyor Dimensions

Motor Specification: 60W ← Motion Direction

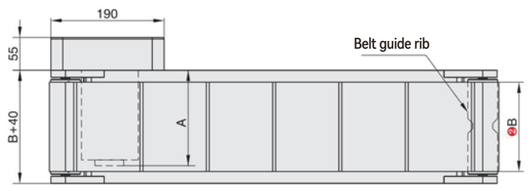

⚠ Above conveyor dimensions is basis on belt thickness H1(1.5mm).

Conveyor Profile Section

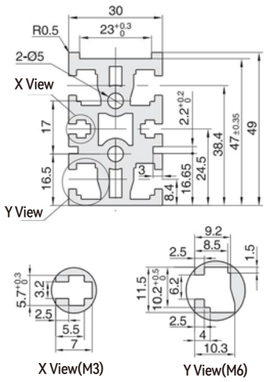

Nut is offered as accessory.



⚠ Nut specification inside aluminum profile slot: Basis on L (Roller center distance)

350~999	1000~1499	1500~	Position	Spec	Status
4PCS	6PCS	8PCS	X View	M3 (hexagonal)	Accessory
4PCS	6PCS	8PCS	YView	M6(square)	Accessory

Conveyor speed and load capability

Form 1: Gear box ratio and conveyor speed(m/min)

Gear box radio	Fix-speed motor Speed(m/min)	Speed adjustable motor Speed(m/min)	Frequency motor Speed(m/min)	Brushless motor Speed(m/min)
5	50.9	30.5~50.9	63.3	0~113.0
7.5	33.9	20.3~33.9	42.2	0~75.4
10	25.4	15.3~25.4	31.7	0~56.5
12.5	20.3	12.2~20.3	25.3	0~45.2
15	17.0	10.2~17.0	21.1	0~37.7
18	14.1	8.5~14.1	17.6	0~31.4
25	10.2	6.1~10.2	12.7	0~22.6
30	8.5	5.1~8.5	10.6	0~18.8
36	7.1	4.2~7.1	8.8	0~15.7
50	5.1	3.1~5.1	6.3	0~11.3
60	4.2	2.5~4.2	5.3	0~9.4

⚠ Test Condition:B=200 L=1000

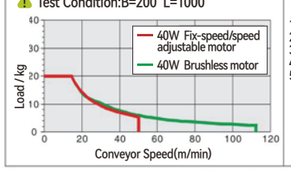

⚠ Speed calculation formula

1.Drive roller diameter D=50mm
2.Speed adjustable motor RPM=1350r/min
3.Frequency motor RPM=1680r/min
4.Brushless motor RPM=3000r/min
5.Belt pulley ratio i2=1.2:1

$$S=\frac{D\times\pi\times R\times i2}{i1\times1000}$$

$$S=\frac{50\times3.14\times1350\times1.2}{12.5\times1000}$$

S= 20.3472m/min

Form 2: Pulse quality and conveyor speed(m/min)

Pulse quantity	Conveyor speed(m/min)	—	—	—	86 series stepper motor torque 4.5N.m	8.0N.m	12.0N.m	—
400	22.6	—	—	—	0~13.8	0~24.8	0~37.4	—
800	45.2	—	—	—	0~6.9	0~12.4	0~18.7	—
1600	90.4	—	—	—	0~3.5	0~6.2	0~9.4	—
3200	180.9	—	—	—	0~1.7	0~3.1	0~4.7	—
6400	361.7	—	—	—	0~0.9	0~1.6	0~2.3	—
12800	723.5	—	—	—	—	—	—	—
25600	1446.9	—	—	—	—	—	—	—
51200	2893.8	—	—	—	—	—	—	—

Instrument 1.Set the current as default 2.Set the code on motor drive
3.Default torque can be modified by current setting.

⚠ Test Condition:B=200 L=1000 Current:5A

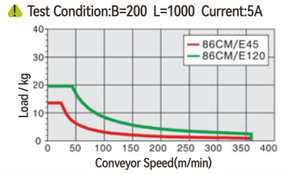

⚠ Speed calculation formula

1.Drive roller diameter D=50mm
2.Pulse quantity=400
3.Stepper motor angle J=1.8°
4.Belt pulley ratio i2=1.2:1

$$S=\frac{D\times\pi\times(M\times J/360\times60)\times i_2}{1000}$$

$$S=\frac{50\times3.14\times(400\times1.8/360\times60)\times1.2}{1000}$$

S=22.608m/min

⚠ Conveyor speed and load capability are for reference, the data is measured by testing under specific conditions.

Belt Specification

Underlying Parameter			
• Material:PU • Thickness:1.5mm • Color:Blackish green • Character:General	• Material:PVC • Thickness:2.0mm • Color:Green • Character:General	• Material:PVC • Thickness:2.0mm • Color:Green • Character:ESD	• Material:PU • Thickness:1.5mm • Color:Black • Character:ESD
H1	H2	D1	D7
Underlying Parameter			
• Material:PU • Thickness:1.5mm • Color:Blue • Character:ESD	• Material:PU • Thickness:1.5mm • Color:White- • Character:Food grade	•Material:PVC •Thickness:2.0mm •Color:Yellow •Character:Special	•Material:PVC •Thickness:2.0mm •Color:Red •Character:Special
D14	F1	Y1	R1

Parts separated by conveyor belt for specified process operating.

Product Application Case

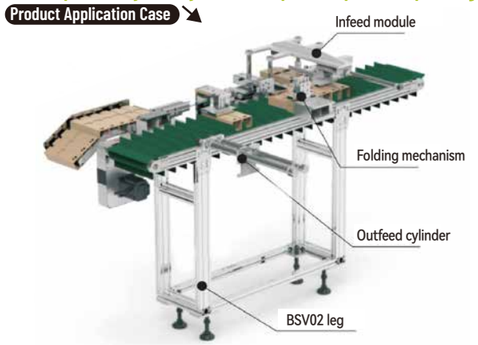

Three Slots Aluminum Profilee

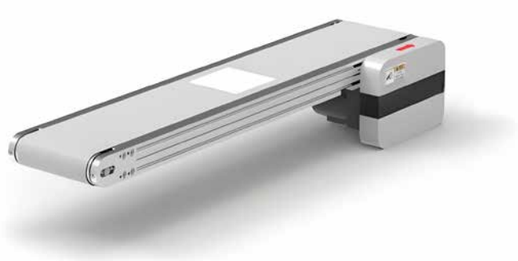

Conveyor Features

Conveyor made of specialized transparent belts,
with parallel surface light sources on the underside of the
belt for product appearance or outline dimensions inspection.

※ Please do not exceed the allowed conveyor load and length. Belt load capability changes according to belt width.

Series Code	Type	※ Conveyor Features		Material			Surface Treatment		
		Application Features	Motion Features	Aluminum Profile	Motor Cover	Pulley Mounting Board	Aluminum Profile	Motor Cover	Pulley Mounting Board
BST01	Belt guide rib to avoid belt shift	Belt runs stable, but guide rib may be slight protrusion.	Forward Reverse transfer	Alloy			Surface electrophoresis	Painting	

Model ❶Series Code	❷W-Select	❸L-Conveyor Length 5mm	❹Lighting Area Position	❺Light Area Length	Motor Options ❻Output Power(w)	❼Voltage	❽Motor Type	❾Gear box ratio	❿Belt Spec	⓫Motor Options	⓬Light Color
BST01 Belt with guide rib	50	540~3000	80~2500	50 100	25 40 60 90	TA220 Single phase	IM Fix-speed motor	5 7.5 10 12.5 15 18 25 30 36 50 60 75 90 100 120 150 180	K (Transparent belt White)	GPG JSCC No motor	H(White)
	100			100 150		SA220 Three phase	SCM Speed adjustable motor				R(Red)
	150			200 250	40 60	DC24 DC TA220 Single phase	INV VFD type			ZD No motor	G(Green)
	200			200 250	❻Motor Series	❼Control method	KMC Speed adjustable motor			⓫Stepper motor brand	U(Blue)
	250			250 300	86 series stepper motor	CM Open loop CME Closed loop	SWS Motor with drive			S(Leadshine) No motor	W(Infrared)
	300			300 400	❻Inertia	❼Voltage(V)	❽Output power	❾Drive type		⓫Servo motor brand	Z(Ultraviolet)
					MH Servo motor	TA220 Single phase	400W 750W	MC Pulse type IO IO type EC IO typeEtherCAT RS RS485 ⚠ Default type: pulse type		S(Leadshine) X(Panasonic) No motor	

※Recommend motor brand JSCC

Model code example													
"—" Model code example	Series Code	Light Area Width	Conveyor Length	Lighting Area Position	Light Area Length	Motor Power	Voltage	Control Method	Ratio	Belt Type	Motor Brand	Light Color
Speed adjustable motor	BST01	W100	L1000	E80	F100	25	TA220	SCM	12.5	K	G	H
"—" Model code example	Series Code	Light Area Width	Conveyor Length	Lighting Area Position	Light Area Length	Motor series	Control Method	Output torque	Drive type	Belt Type	Motor Brand	Light Color
Stepper motor	BST01	W100	L1000	E80	F100	86	CM	45	MC	K	S	H
"—" Model code example	Series Code	Light Area Width	Conveyor Length	Lighting Area Position	Light Area Length	Inertia	Voltage	Output power	Drive type	Belt Type	Motor Brand	Light Color
Servo motor	BST01	W100	L1000	E80	F100	MH	TA220	400W	EC	K	X	H

Conveyor Dimensions

Motor Specification: 25W ⟵ Motion Direction

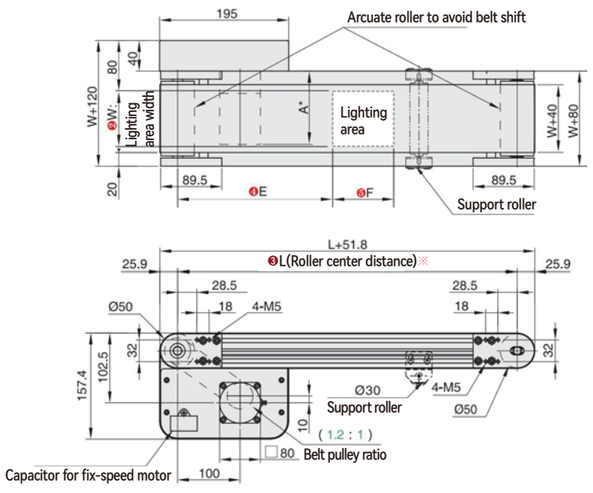

⚠ Above conveyor dimensions is basis on belt thickness K(0.9mm).

Conveyor Profile Section

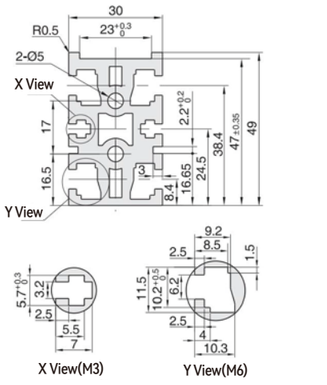

Nut is offered as accessory.



⚠ Nut specification inside aluminum profile slot:
Basis on L (Roller center distance)

540~999	1000~1499	1500~	Position	Spec	Status
4PCS	6PCS	8PCS	X View	M3 (hexagonal)	Accessory
4PCS	6PCS	8PCS	YView	M6(square)	Accessory

Conveyor speed and load capability

Form 1: Gear box ratio and conveyor speed(m/min)

Gear box radio	Fix-speed motor Speed(m/min)	Speed adjustable motor Speed(m/min)	Frequency motor Speed(m/min)	Brushless motor Speed(m/min)
5	50.9	30.5~50.9	63.3	0~113.0
7.5	33.9	20.3~33.9	42.2	0~75.4
10	25.4	15.3~25.4	31.7	0~56.5
12.5	20.3	12.2~20.3	25.3	0~45.2
15	17.0	10.2~17.0	21.1	0~37.7
18	14.1	8.5~14.1	17.6	0~31.4
25	10.2	6.1~10.2	12.7	0~22.6
30	8.5	5.1~8.5	10.6	0~18.8
36	7.1	4.2~7.1	8.8	0~15.7
50	5.1	3.1~5.1	6.3	0~11.3
60	4.2	2.5~4.2	5.3	0~9.4

Form 2: Pulse quality and conveyor speed(m/min)

Pulse quantity	Conveyor speed(m/min)	—	—	—	86 series stepper motor torque 4.5N.m	8.0N.m	—	—
400	22.6	—	—	—	0~13.8	0~24.8	—	—
800	45.2	—	—	—	0~6.9	0~12.4	—	—
1600	90.4	—	—	—	0~3.5	0~6.2	—	—
3200	180.9	—	—	—	0~1.7	0~3.1	—	—
6400	361.7	—	—	—	0~0.9	0~1.6	—	—
12800	723.5	—	—	—	—	—	—	—
25600	1446.9	—	—	—	—	—	—	—
51200	2893.8	—	—	—	—	—	—	—

Instrument 1.Set the current as default 2.Set the code on motor drive
3.Default torque can be modified by current setting.

⚠ Test Condition:B=200 L=1000

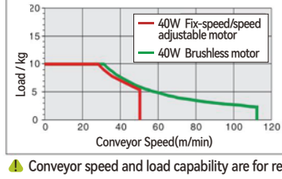

⚠ Speed calculation formula

1.Drive roller diameter D=50mm
2.Speed adjustable motor RPM=1350r/min
3.Frequency motor RPM=1680r/min
4.Brushless motor RPM=3000r/min
5.Belt pulley ratio i2=1.2:1

$$S=\frac{D\times\pi\times R\times i2}{i1\times1000}$$

$$S=\frac{50\times3.14\times1350\times1.2}{12.5\times1000}$$

S=20.3472m/min

⚠ Test Condition:B=200 L=1000 Current:5A

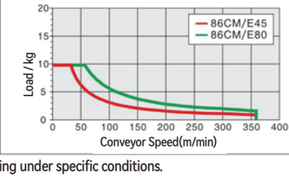

⚠ Speed calculation formula

1.Drive roller diameter D=50mm
2.Pulse quantity=400
3.Stepper motor angle J=1.8°
4.Belt pulley ratio i2=1.2:1

$$S=\frac{D\times\pi\times(M\times J/(360\times60))\times i_2}{1000}$$

$$S=\frac{50\times3.14\times(400\times1.8/(360\times60))\times1.2}{1000}$$

S=22.608m/min

⚠ Conveyor speed and load capability are for reference, the data is measured by testing under specific conditions.

Light Performance and Specification

Light Features				
Power cable length	Standard length 485+15mm, option extension cable length 1/2/3m			
Material statement	RoHs compliance			
Wavelength range	Red 620-630mm		Blue 465-475mm	
	Green 515-530mm		White 6000-100000k(Color temperature)	
Working environment	Temperature 0-40℃		Humidity 20-80%RH(Non-condensing)	
Storage environment	-20-60℃			
Life (Attenuation amount 50%)	Red Red (Operate continuously for over 60,000 hours at 50% illuminance)		Adapt to Rsee series controller	
	White White (Operate continuously for over 30,000 hours at 50% illuminance)			

Parallel plane light

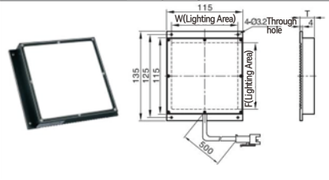

W-Width	F-Length	T-Thickness
50	50	19
	100	20
100	100	19
	150	19
150	200	19
	250	19
200	200	23
	250	19
250	250	24
	300	24
300	300	22
	400	24

Conveyor With Light



Lighting illustration

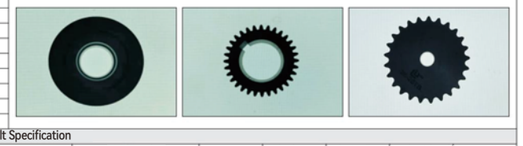

Transparent Belt Specification										
Belt Specification Code	Belt Performance	Color	Attribute	Translucency	Material Conveying face	Material Roller drive face	Layer quantity	Thickness (mm)	Adapt roller diameter(mm)	Adapt load (KG)	Temperature resistant(℃)
K	Backlight	White(bright face)	Default	60%~85%(Non pure transparency)	PU	Polyester canvas	Single layer	0.9	Ø20~50	0~15	0~80

⚠ Standard light controller is two lanes, power source AC220V, maximum length of extension power cable is 3meters.

Three Slots Aluminum Profilee



Conveyor Features

Conveyor made of specialized transparent belts,
with parallel surface light sources on the underside of the
belt for product appearance or outline dimensions inspection.

※ Please do not exceed the allowed conveyor load and length. Belt load capability changes according to belt width.

Series Code	Type	※ Conveyor Features		Material			Surface Treatment		
		Application Features	Motion Features	Aluminum Profile	Motor Cover	Pulley Mounting Board	Aluminum Profile	Motor Cover	Pulley Mounting Board
BSZ01	Belt guide rib to avoid belt shift	Belt runs stable, but guide rib may be slight protrusion.	Forward Reverse transfer	Alloy			Surface electrophoresis	Painting	

Model	❸ L-Conveyor Length 5mm	❹ Lighting Area Position	❺ Light Area Length	Motor Options				❿ Belt Spec	⓫ Motor Options	⓬ Light Color
❶Series Code ❷W-Select				❻ Output Power(w)	❼ Voltage	❽ Motor Type	❾ Gear box ratio			
BSZ01 Belt with guide rib 50 100 150 200 250 300	540~3000	80~2500	50 100 100 150 200 250 200 250 250 300 300 400	25 40 60 90 40 60	TA220 Single phase SA220 Three phase DC24 DC TA220 Single phase	IM Fix-speed motor SCM Speed adjustable motor INV VFD type KMC Speed adjustable motor SWS Motor with drive	5 7.5 10 12.5 15 18 25 30 36 50 60 75 90 100 120 150 180	K (Transparent belt White)	GPG JSCC No motor ZD No motor	H(White) R(Red) G(Green) U(Blue) W(Infrared) Z(Ultraviolet)
				❻ Motor Series	❼ Control method	❽ Output torque	❾ Drive type		⓫ Stepper motor brand	
				86 series stepper motor	CM Open loop CME Closed loop	45 80	MC Pulse type IO IO type EC IO typeEtherCAT RS RS485 ⚠ Default type: pulse type		S(Leadshine) No motor	
				❻ Inertia	❼ Voltage(V)	❽ Output power			⓫ Servo motor brand	
				MH Servo motor	TA220 Single phase	400W 750W			S(Leadshine) X(Panasonic) No motor	

※ Recommend motor brand JSCC

Model code example												
"—" Model code example	Series Code	Light Area Width	Conveyor Length	Lighting Area Position	Light Area Length	Motor Power	Voltage	Control Method	Ratio	Belt Type	Motor Brand	Light Color
Speed adjustable motor	BSZ01 –	W100 –	L1000 –	E80 –	F100 –	25 –	TA220 –	SCM –	12.5 –	K –	G –	H
"—" Model code example	Series Code	Light Area Width	Conveyor Length	Lighting Area Position	Light Area Length	Motor series	Control Method	Output torque	Drive type	Belt Type	Motor Brand	Light Color
Stepper motor	BSZ01 –	W100 –	L1000 –	E80 –	F100 –	86 –	CM –	45 –	MC –	K –	S –	H
"—" Model code example	Series Code	Light Area Width	Conveyor Length	Lighting Area Position	Light Area Length	Inertia	Voltage	Output power	Drive type	Belt Type	Motor Brand	Light Color
Servo motor	BSZ01 –	W100 –	L1000 –	E80 –	F100 –	MH –	TA220 –	400W –	EC –	K –	X –	H

Conveyor Dimensions

Motor Specification: 25W ⟵ Motion Direction

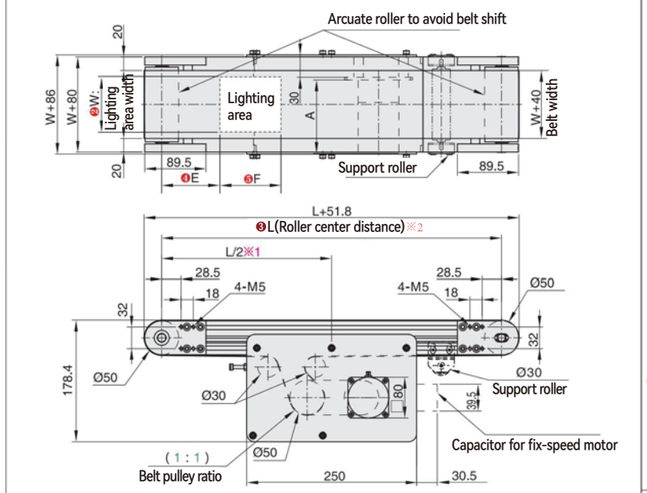

⚠ Above conveyor dimensions is basis on belt thickness K(0.9mm).

Conveyor Profile Section

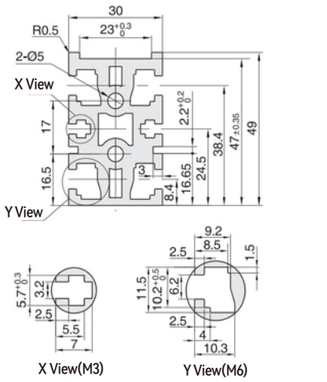

Nut is offered as accessory.



⚠ Nut specification inside aluminum profile slot:
Basis on L (Roller center distance)

540~999	1000~1499	1500~	Position	Spec	Status
4PCS	6PCS	8PCS	X View	M3 (hexagonal)	Accessory
4PCS	6PCS	8PCS	YView	M6(square)	Accessory

Conveyor speed and load capability

Form 1: Gear box ratio and conveyor speed(m/min)

Gear box radio	Fix-speed motor Speed(m/min)	Speed adjustable motor Speed(m/min)	Frequency motor Speed(m/min)	Brushless motor Speed(m/min)
5	42.4	25.4~42.4	52.8	0~94.2
7.5	28.3	17.0~28.3	35.2	0~62.8
10	21.2	12.7~21.2	26.4	0~47.1
12.5	17.0	10.2~17.0	21.1	0~37.7
15	14.1	8.5~14.1	17.6	0~31.4
18	11.8	7.1~11.8	14.7	0~26.2
25	8.5	5.1~8.5	10.6	0~18.8
30	7.1	4.2~7.1	8.8	0~15.7
36	5.9	3.5~5.9	7.3	0~13.1
50	4.2	2.5~4.2	5.3	0~9.4
60	3.5	2.1~3.5	4.4	0~7.9

⚠ Test Condition:B=200 L=1000

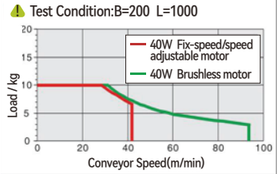

⚠ Speed calculation formula

1.Drive roller diameter D=50mm
2.Speed adjustable motor RPM=1350r/min
3.Frequency motor RPM=1680r/min
4.Brushless motor RPM=3000r/min
5.Belt pulley ratio i2=1:1

$$S=\frac{D\times\pi\times R\times i2}{i1\times1000}$$

$$S=\frac{50\times3.14\times1350\times1}{12.5\times1000}$$

S= 16.956m/min

Form 2: Pulse quality and conveyor speed(m/min)

Pulse quantity	Conveyor speed(m/min)	–	–	–	86 series stepper motor torque 4.5N.m	8.0N.m	–	–
400	18.8	–	–	–	0~20.0	0~35.8	–	–
800	37.7	–	–	–	0~10.0	0~17.9	–	–
1600	75.4	–	–	–	0~5.0	0~9.0	–	–
3200	150.7	–	–	–	0~2.5	0~4.5	–	–
6400	301.4	–	–	–	0~1.2	0~2.2	–	–
12800	602.9	–	–	–	–	–	–	–
25600	1205.8	–	–	–	–	–	–	–
51200	2411.5	–	–	–	–	–	–	–

Instrument 1.Set the current as default 2.Set the code on motor drive
3.Default torque can be modified by current setting.

⚠ Test Condition:B=200 L=1000 Current:5A

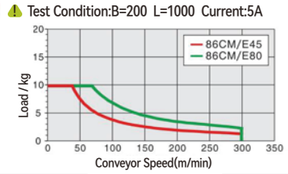

⚠ Speed calculation formula

1.Drive roller diameter D=50mm
2.Pulse quantity=400
3.Stepper motor angle J=1.8°
4.Belt pulley ratio i2=1:1

$$S=\frac{D\times\pi\times(M\times J/360\times60)\times i_2}{1000}$$

$$S=\frac{50\times3.14\times(400\times1.8/360\times60)\times1}{1000}$$

S= 18.84m/min

⚠ Conveyor speed and load capability are for reference, the data is measured by testing under specific conditions.

Light Performance and Specification

Light Features				
Power cable length	Standard length 485+15mm, option extension cable length 1/2/3m			
Material statement	RoHs compliance			
Wavelength range	Red 🔴	620-630mm	Blue 🔵	465-475mm
	Green 🟢	515-530mm	White Ⓦ	6000-100000k(Color temperature)
Working environment	Temperature	0-40℃	Humidity	20-80%RH(Non-condensing)
Storage environment		-20-60℃		
Life (Attenuation amount 50%)	Red 🔴	Red (Operate continuously for over 60,000 hours at 50% illuminance)	Adapt to Rsee series controller	
	White Ⓦ	White (Operate continuously for over 30,000 hours at 50% illuminance)		

Parallel plane light

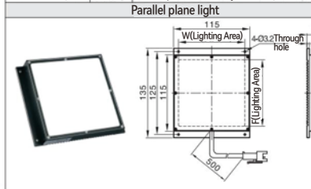

W-Width	F-Length	T-Thickness
50	50	19
	100	20
100	100	19
	150	19
150	200	19
	250	19
200	200	23
	250	19
250	250	24
	300	24
300	300	22
	400	24

Conveyor With Light



Lighting illustration



Transparent Belt Specification

Belt Specification					Material					
Code	Belt Performance	Color	Attribute	Translucency	Conveying face	Roller drive face	Layer quantity	Thickness (mm)	Adapt roller diameter(mm)	Adapt load (KG)	Temperature resistant(℃)
K	Backlight	White(bright face)	Default	60%~85%(Non pure transparency)	PU	Polyester canvas	Single layer	0.9	Ø20~50	0~15	0~80

⚠ Standard light controller is two lanes, power source AC220V, maximum length of extension power cable is 3meters.

Three Slots Aluminum Profilee



Conveyor Features

Conveyor made of specialized transparent belts,
overall belt design, with parallel surface light sources on the underside of the belt for product appearance or outline dimensions inspection.

※ Please do not exceed the allowed conveyor load and length. Belt load capability changes according to belt width.

Series Code	Type	※ Conveyor Features		Material			Surface Treatment		
		Application Features	Motion Features	Aluminum Profile	Motor Cover	Pulley Mounting Board	Aluminum Profile	Motor Cover	Pulley Mounting Board
BSQ01	Belt guide rib to avoid belt shift	Belt runs stable, but guide rib may be slight protrusion.	Forward Reverse transfer	Alloy			Surface electrophoresis	Painting	

Model ❶Series Code ❷W-Select		❸L-Conveyor Length 5mm	❹Lighting Area Position	❺Light Area Length	Motor Options ❻Output Power(w)	❼Voltage	❽Motor Type	❾Gear box ratio	❿Belt Spec	⓫Motor Options	⓬Light Color
BSQ01 Belt with guide rib	50	540~3000	80~2500	50 100	25 40 60 90	TA220 Single phase	IM Fix-speed motor SCM Speed adjustable motor	5 7.5 10 12.5 15 18 25 30 36 50 60 75 90 100 120 150 180	K (Transparent belt White)	GPG JSCC No motor	H(White)
	100			100 150		SA220 Three phase	INV VFD type			ZD No motor	R(Red)
	150			200 250	40 60	DC24 DC TA220 Single phase	KMC Speed adjustable motor SWS Motor with drive				G(Green)
	200			200 250	❻Motor Series	❼Control method	❽Output torque	❾Drive type		⓫Stepper motor brand	U(Blue)
	250			250 300	86 series stepper motor	CM Open loop CME Closed loop	45 80	MC Pulse type IO IO type EC IO typeEtherCAT RS RS485		S(Leadshine) No motor	W(Infrared)
	300			300 400	❻Inertia	❼Voltage(V)	❽Output power	⚠ Default type: pulse type		⓫Servo motor brand	Z(Ultraviolet)
					MH Servo motor	TA220 Single phase	400W 750W			S(Leadshine) X(Panasonic) No motor	

※Recommend motor brand JSCC

Model code example													
"—" Model code example	Series Code	Light Area Width	Conveyor Length	Lighting Area Position	Light Area Length	Motor Power	Voltage	Control Method	Ratio	Belt Type	Motor Brand	Light Color	
Speed adjustable motor	BSQ01	W100	L1000	E80	F100	25	TA220	SCM	12.5	K	G	H	
"—" Model code example	Series Code	Light Area Width	Conveyor Length	Lighting Area Position	Light Area Length	Motor series	Control Method	Output torque	Drive type	Belt Type	Motor Brand	Light Color	
Stepper motor	BSQ01	W100	L1000	E80	F100	86	CM	45	MC	K	S	H	
"—" Model code example	Series Code	Light Area Width	Conveyor Length	Lighting Area Position	Light Area Length	Inertia	Voltage	Output power	Drive type	Belt Type	Motor Brand	Light Color	
Servo motor	BSQ01	W100	L1000	E80	F100	MH	TA220	400W	EC	K	X	H	

Conveyor Dimensions

Motor Specification: 25W ← Motion Direction

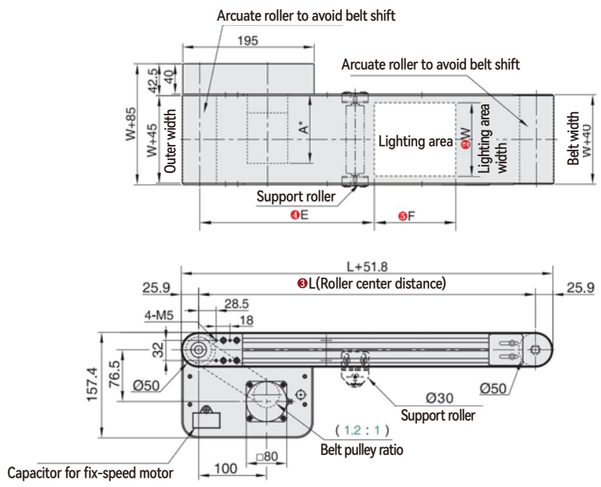

⚠ Above conveyor dimensions is basis on belt thickness K(0.9mm).

Conveyor Profile Section

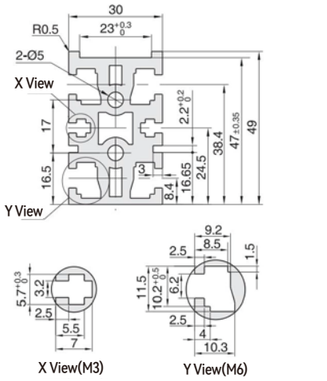

Nut is offered as accessory.



⚠ Nut specification inside aluminum profile slot:
Basis on L (Roller center distance)

540~999	1000~1499	1500~	Position	Spec	Status
4PCS	6PCS	8PCS	X View	M3 (hexagonal)	Accessory
4PCS	6PCS	8PCS	YView	M6(square)	Accessory

Conveyor speed and load capability

Form 1: Gear box ratio and conveyor speed(m/min)

Gear box radio	Fix-speed motor Speed(m/min)	Speed adjustable motor Speed(m/min)	Frequency motor Speed(m/min)	Brushless motor Speed(m/min)
5	50.9	30.5~50.9	63.3	0~113.0
7.5	33.9	20.3~33.9	42.2	0~75.4
10	25.4	15.3~25.4	31.7	0~56.5
12.5	20.3	12.2~20.3	25.3	0~45.2
15	17.0	10.2~17.0	21.1	0~37.7
18	14.1	8.5~14.1	17.6	0~31.4
25	10.2	6.1~10.2	12.7	0~22.6
30	8.5	5.1~8.5	10.6	0~18.8
36	7.1	4.2~7.1	8.8	0~15.7
50	5.1	3.1~5.1	6.3	0~11.3
60	4.2	2.5~4.2	5.3	0~9.4

Form 2: Pulse quality and conveyor speed(m/min)

Pulse quantity	Conveyor speed(m/min)	—	—	—	86 series stepper motor torque 4.5N.m	8.0N.m	—	—
400	22.6	—	—	—	0~13.8	0~24.8	—	—
800	45.2	—	—	—	0~6.9	0~12.4	—	—
1600	90.4	—	—	—	0~3.5	0~6.2	—	—
3200	180.9	—	—	—	0~1.7	0~3.1	—	—
6400	361.7	—	—	—	0~0.9	0~1.6	—	—
12800	723.5	—	—	—	—	—	—	—
25600	1446.9	—	—	—	—	—	—	—
51200	2893.8	—	—	—	—	—	—	—

Instrument 1.Set the current as default 2.Set the code on motor drive
3.Default torque can be modified by current setting.

⚠ Test Condition:B=200 L=1000

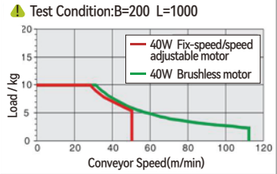

⚠ Speed calculation formula

1.Drive roller diameter D=50mm
2.Speed adjustable motor RPM=1350r/min
3.Frequency motor RPM=1680r/min
4.Brushless motor RPM=3000r/min
5.Belt pulley ratio i2=1.2:1

$$S=\frac{D\times\pi\times R\times i2}{i1\times1000}$$

$$S=\frac{50\times3.14\times1350\times1.2}{12.5\times1000}$$

S=20.3472m/min

⚠ Test Condition:B=200 L=1000 Current:5A

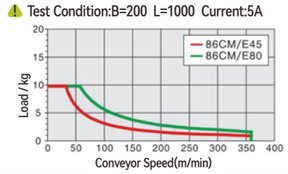

⚠ Speed calculation formula

1.Drive roller diameter D=50mm
2.Pulse quantity=400
3.Stepper motor angle J=1.8°
4.Belt pulley ratio i2=1.2:1

$$S=\frac{D\times\pi\times(M\times J/360\times60)\times i_2}{1000}$$

$$S=\frac{50\times3.14\times(400\times1.8/360\times60)\times1.2}{1000}$$

S=22.608m/min

⚠ Conveyor speed and load capability are for reference, the data is measured by testing under specific conditions.

Light Performance and Specification

Light Features				
Power cable length	Standard length 485+15mm, option extension cable length 1/2/3m			
Material statement	RoHs compliance			
Wavelength range	Red	620-630mm	Blue	465-475mm
	Green	515-530mm	White	6000-100000k(Color temperature)
Working environment / Storage environment	Temperature	0-40℃ / -20-60℃	Humidity	20-80%RH(Non-condensing)
Life (Attenuation amount 50%)	Red	Red (Operate continuously for over 60,000 hours at 50% illuminance)	Adapt to Rsee series controller	
	White	White (Operate continuously for over 30,000 hours at 50% illuminance)		

Conveyor With Light

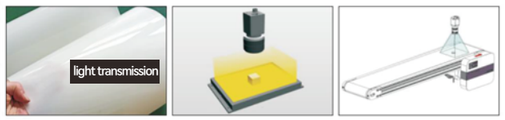

Lighting illustration



Parallel plane light

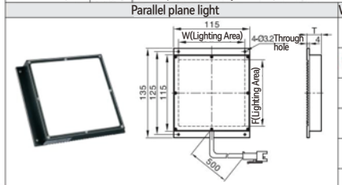

W-Width	F-Length	T-Thickness
50	50	19
	100	20
100	100	19
	150	19
150	200	19
	250	19
200	200	23
	250	19
250	250	24
	300	24
300	300	22
	400	24

Transparent Belt Specification

Belt Specification Code	Belt Performance	Color	Attribute	Translucency	Material Conveying face	Material Roller drive face	Layer quantity	Thickness (mm)	Adapt roller diameter(mm)	Adapt load (KG)	Temperature resistant(℃)
K	Backlight	White(bright face)	Default	60%~85%(Non pure transparency)	PU	Polyester canvas	Single layer	0.9	Ø20~50	0~15	0~80

⚠ Standard light controller is two lanes, power source AC220V, maximum length of extension power cable is 3meters.

Three Slots Aluminum Profilee



Conveyor Features

Conveyor made of specialized transparent belts,
overall belt design, with parallel surface light sources on the underside of the belt for product appearance or outline dimensions inspection.

Conveyor Dimensions

Motor Specification: 25W ← Motion Direction

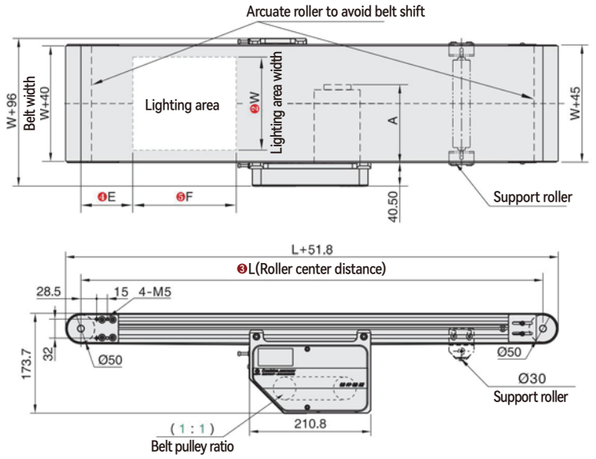

⚠ Above conveyor dimensions is basis on belt thickness K(0.9mm).

Conveyor Profile Section

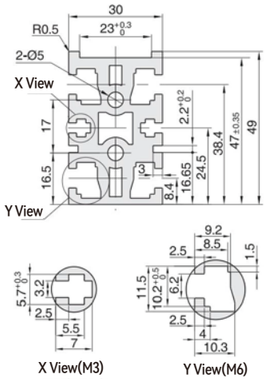

Nut is offered as accessory.



⚠ Nut specification inside aluminum profile slot:
Basis on L (Roller center distance)

540~999	1000~1499	1500~	Position	Spec	Status
4PCS	6PCS	8PCS	X View	M3 (hexagonal)	Accessory
4PCS	6PCS	8PCS	YView	M6(square)	Accessory

Conveyor speed and load capability

Form 1: Gear box ratio and conveyor speed(m/min)

Gear box radio	Fix-speed motor Speed(m/min)	Speed adjustable motor Speed(m/min)	Frequency motor Speed(m/min)	Brushless motor Speed(m/min)
5	42.4	25.4~42.4	52.8	0~94.2
7.5	28.3	17.0~28.3	35.2	0~62.8
10	21.2	12.7~21.2	26.4	0~47.1
12.5	17.0	10.2~17.0	21.1	0~37.7
15	14.1	8.5~14.1	17.6	0~31.4
18	11.8	7.1~11.8	14.7	0~26.2
25	8.5	5.1~8.5	10.6	0~18.8
30	7.1	4.2~7.1	8.8	0~15.7
36	5.9	3.5~5.9	7.3	0~13.1
50	4.2	2.5~4.2	5.3	0~9.4
60	3.5	2.1~3.5	4.4	0~7.9

Form 2: Pulse quality and conveyor speed(m/min)

Pulse quantity	Conveyor speed(m/min)	–	–	–	86 series stepper motor torque 4.5N.m	8.0N.m	–	–
400	18.8	–	–	–	0~20.0	0~35.8	–	–
800	37.7	–	–	–	0~10.0	0~17.9	–	–
1600	75.4	–	–	–	0~5.0	0~9.0	–	–
3200	150.7	–	–	–	0~2.5	0~4.5	–	–
6400	301.4	–	–	–	0~1.2	0~2.2	–	–
12800	602.9	–	–	–	–	–	–	–
25600	1205.8	–	–	–	–	–	–	–
51200	2411.5	–	–	–	–	–	–	–

Instrument 1.Set the current as default 2.Set the code on motor drive
3.Default torque can be modified by current setting.

⚠ Test Condition:B=200 L=1000

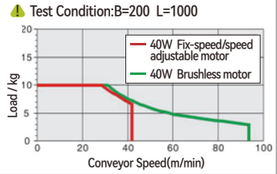

⚠ Speed calculation formula

1.Drive roller diameter D=50mm
2.Speed adjustable motor RPM=1350r/min
3.Frequency motor RPM=1680r/min
4.Brushless motor RPM=3000r/min
5.Belt pulley ratio i2=1:1

$$S=\frac{D\times\pi\times R\times i2}{i1\times1000}$$

$$S=\frac{50\times3.14\times1350\times1}{12.5\times1000}$$

S= 16.956m/min

⚠ Test Condition:B=200 L=1000 Current:5A

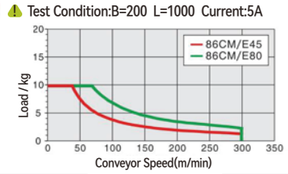

⚠ Speed calculation formula

1.Drive roller diameter D=50mm
2.Pulse quantity=400
3.Stepper motor angle J=1.8°
4.Belt pulley ratio i2=1:1

$$S=\frac{D\times\pi\times(M\times J/360\times60)\times i_2}{1000}$$

$$S=\frac{50\times3.14\times(400\times1.8/360\times60)\times1}{1000}$$

S= 18.84m/min

⚠ Conveyor speed and load capability are for reference, the data is measured by testing under specific conditions.

※ Please do not exceed the allowed conveyor load and length. Belt load capability changes according to belt width.

Series Code	Type	※ Conveyor Features: Application Features	※ Conveyor Features: Motion Features	Material: Aluminum Profile	Material: Motor Cover	Material: Pulley Mounting Board	Surface Treatment: Aluminum Profile	Surface Treatment: Motor Cover	Surface Treatment: Pulley Mounting Board
BSN01	Belt guide rib to avoid belt shift	Belt runs stable, but guide rib may be slight protrusion.	Forward Reverse transfer	Alloy			Surface electrophoresis	Painting	

Model ❶Series Code	❷W-Select	❸L-Conveyor Length 5mm	❹Lighting Area Position	❺Light Area Length	Motor Options: ❻Output Power(w)	❼Voltage	❽Motor Type	❾Gear box ratio	❿Belt Spec	⓫Motor Options	⓬Light Color
BSN01 Belt with guide rib	50	540~3000	80~2500	50 100	25 40 60 90	TA220 Single phase	IM Fix-speed motor SCM Speed adjustable motor	5 7.5 10 12.5 15 18 25 30 36 50 60 75 90 100 120 150 180	K (Transparent belt White)	GPG JSCC No motor	H(White) R(Red) G(Green) U(Blue) W(Infrared) Z(Ultraviolet)
	100			100 150		SA220 Three phase	INV VFD type			ZD No motor	
	150			200 250	40 60	DC24 DC TA220 Single phase	KMC Speed adjustable motor SWS Motor with drive			⓫Stepper motor brand	
	200			200 250	❻Motor Series	❼Control method	❽Output torque	❾Drive type		S(Leadshine) No motor	
	250			250 300	86 series stepper motor	CM Open loop CME Closed loop	45 80	MC Pulse type IO IO type EC IO typeEtherCAT RS RS485		⓫Servo motor brand	
	300			300 400	❻Inertia	❼Voltage(V)	❽Output power	⚠ Default type: pulse type		S(Leadshine) X(Panasonic) No motor	
					MH Servo motor	TA220 Single phase	400W 750W				

※ Recommend motor brand JSCC

Model code example	Series Code	Light Area Width	Conveyor Length	Lighting Area Position	Light Area Length	Motor Power	Voltage	Control Method	Ratio	Belt Type	Motor Brand	Light Color
Speed adjustable motor	BSN01 –	W100 –	L1000 –	E80 –	F100 –	25 –	TA220 –	SCM –	12.5 –	K –	G –	H
Model code example	Series Code	Light Area Width	Conveyor Length	Lighting Area Position	Light Area Length	Motor series	Control Method	Output torque	Drive type	Belt Type	Motor Brand	Light Color
Stepper motor	BSN01 –	W100 –	L1000 –	E80 –	F100 –	86 –	CM –	45 –	MC –	K –	S –	H
Model code example	Series Code	Light Area Width	Conveyor Length	Lighting Area Position	Light Area Length	Inertia	Voltage	Output power	Drive type	Belt Type	Motor Brand	Light Color
Servo motor	BSN01 –	W100 –	L1000 –	E80 –	F100 –	MH –	TA220 –	400W –	EC –	K –	X –	H

Light Performance and Specification

Light Features				
Power cable length	Standard length 485+15mm, option extension cable length 1/2/3m			
Material statement	RoHs compliance			
Wavelength range	Red ❶ 620-630mm	Blue ❶	465-475mm	
	Green ❷ 515-530mm	White ⓦ	6000-100000k(Color temperature)	
Working environment	Temperature 0-40℃	Humidity	20-80%RH(Non-condensing)	
Storage environment	-20-60℃			
Life (Attenuation amount 50%)	Red ❶ Adapt to Rsee series controller (Operate continuously for over 60,000 hours at 50% illuminance)			
	White ⓦ (Operate continuously for over 30,000 hours at 50% illuminance)			

Parallel plane light

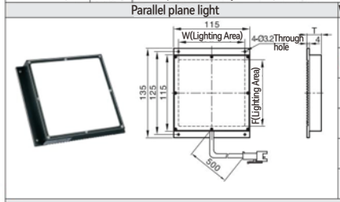

W-Width	F-Length	T-Thickness
50	50	19
	100	20
100	100	19
	150	19
150	200	19
	250	19
200	200	23
	250	19
250	250	24
	300	24
300	300	22
	400	24

Conveyor With Light



Lighting illustration



Transparent Belt Specification: Belt Specification Code	Belt Performance	Color	Attribute	Translucency	Material: Conveying face	Material: Roller drive face	Layer quantity	Thickness (mm)	Adapt roller diameter(mm)	Adapt load (KG)	Temperature resistant(℃)
K	Backlight	White(bright face)	Default	60%~85%(Non pure transparency)	PU	Polyester canvas	Single layer	0.9	Ø20~50	0~15	0~80

⚠ Standard light controller is two lanes, power source AC220V, maximum length of extension power cable is 3meters.

Dual Slots Aluminum Profilee



Conveyor Features

Conveyor with sharp end for compact connection,
one lane conveyor for small part positioning and transferring.

※ Please do not exceed the allowed conveyor load and length.

Series Code	Type	※ Conveyor Features		Material			Surface Treatment		
		Application Features	Motion Features	Aluminum Profile	Motor Cover	Pulley Mounting Board	Aluminum Profile	Motor Cover	Pulley Mounting Board
BTA01	Baffle alignment type for small load	Cloth tooth surface to reduce noise support precision positioning and transferring	Forward/ Reverse transfer	Alloy			Surface electrophoresis	Painting	

Model		❸L-Conveyor Length 5mm	Motor Options						
❶ Series Code	❷B-Belt Width		❹ Output Power(W)	❺ Voltage(V)	❻ Motor Type	❼ Gear box ratio	❽ Belt Spec	❾ Motor Brand
BTA01	10	245~2000	6	TA220 Single phase SA220 Three phase DC24 DC TA220 Single phase	IM Fix-speed motor SCM Speed adjustable motor	12.5 15 18 25 30 36 50 60 75 90 100 120 150 180	C(General type-Tooth with cloth face) C1(General type-Cloth face at both side) N(ESD-Cloth face at both side) N1(ESD-Tooth with cloth face) K(Anti-slip-Rubber surface) K2(Anti-slip-Rubber surface) K3(Anti-slip-Rubber surface) K7(Anti-slip-Tooth with cloth face)	GPG JSCC No motor
			❹ Motor Series	❺ Control method	❻ Output torque	❼ Drive type		❾ Stepper motor brand
			86 series stepper motor	CM Open loop CME Closed loop	23 26 31	MC Pulse type IO IO type EC IO typeEtherCAT RS RS485 ⚠ Default type: pulse type		S(Leadshine) No motor
			❹ Inertia	❺ Voltage(V)	❻ Output power			❾ Servo motor brand
			MH Servo motor	TA220 Single phase	200W 400W			S(Leadshine) X(Panasonic) No motor

※ Recommend motor brand JSCC

Model code example										
"—" Model code example	Series Code	Belt Width	Conveyor Length	Motor Power	Voltage	Control Method	Ratio	Timing Belt Type	Motor Brand
Speed adjustable motor	BTA01 –	B10 –	L800 –	6 –	TA220 –	SCM –	12.5 –	C –	G
"—" Model code example	Series Code	Belt Width	Conveyor Length	Motor series	Control Method	Output torque	Drive type	Timing Belt Type	Motor Brand
Stepper motor	BTA01 –	B10 –	L800 –	57 –	CM –	23 –	MC –	C –	S
"—" Model code example	Series Code	Belt Width	Conveyor Length	Inertia	Voltage	Output power	Drive type	Timing Belt Type	Motor Brand
Servo motor	BTA01 –	B10 –	L800 –	MH –	TA220 –	200W –	EC –	C –	X

Conveyor Dimensions

Motor Specification : 6W ⟵ Motion Direction

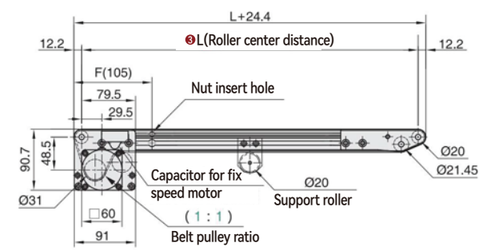

Conveyor Profile Section

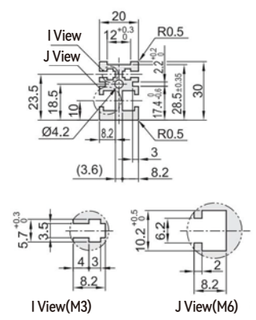

⚠ Nut specification inside aluminum profile slot:
Basis on L (Roller center distance)

245~999	1000~1499	1500~	Position	Spec	Status
4PCS	6PCS	8PCS	I View	M3 (hexagonal)	Accessory
4PCS	6PCS	8PCS	J View	M6(square)	Accessory

Conveyor speed and load capability

Form 1: Gear box ratio and conveyor speed(m/min)

Gear box radio	Fix-speed motor Speed(m/min)	Speed adjustable motor Speed(m/min)	Frequency motor Speed(m/min)	Brushless motor Speed(m/min)
5	–	–	–	–
7.5	–	–	–	–
10	–	–	–	–
12.5	10.9	6.5~10.9	–	–
15	9.0	5.4~9.0	–	–
18	7.5	4.5~7.5	–	–
25	5.4	3.3~5.4	–	–
30	4.5	2.7~4.5	–	–
36	3.8	2.3~3.8	–	–
50	2.7	1.6~2.7	–	–
60	2.3	1.4~2.3	–	–

Form 2: Pulse quality and conveyor speed(m/min)

Pulse quantity	Conveyor speed(m/min)	57 series stepper motor torque 2.3N.m	2.6N.m	3.1N.m	–	–	–	–
400	12.1	0~16.3	0~18.4	0~21.9	–	–	–	–
800	24.1	0~8.1	0~9.2	0~11.0	–	–	–	–
1600	48.2	0~4.1	0~4.6	0~5.5	–	–	–	–
3200	96.5	0~2.0	0~2.3	0~2.7	–	–	–	–
6400	192.9	0~1.0	0~1.2	0~1.4	–	–	–	–
12800	385.8	–	–	–	–	–	–	–
25600	771.7	–	–	–	–	–	–	–
51200	1543.4	–	–	–	–	–	–	–

Instrument 1.Set the current as default 2.Set the code on motor drive
3.Default torque can be modified by current setting.

⚠ Test Condition:B=10 L=800

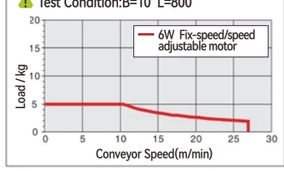

⚠ Speed calculation formula

1.Drive roller diameter D=32mm
2.Speed adjustable motor RPM=1350r/min
3.Frequency motor RPM=1680r/min
4.Brushless motor RPM=3000r/min
5.Belt pulley ratio i2=1:1

$$S=\frac{D\times\pi\times R\times i2}{i1\times1000}$$

$$S=\frac{32\times3.14\times1350\times1}{12.5\times1000}$$

S= 10.85184m/min

⚠ Test Condition:B=10 L=800 Current:5A

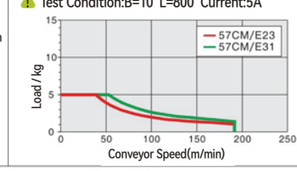

⚠ Speed calculation formula

1.Drive roller diameter D=32mm
2.Pulse quantity=400
3.Stepper motor angle J=1.8°
4.Belt pulley ratio i2=1:1

$$S=\frac{D\times\pi\times(M\times J/360\times60)\times i_2}{1000}$$

$$S=\frac{32\times3.14\times(400\times1.8/360\times60)\times1}{1000}$$

S= 12.0576m/min

⚠ Conveyor speed and load capability are for reference, the data is measured by testing under specific conditions.

Belt Specification

Underlying Parameter			
• Tooth type:T5 • Surface: White polyurethane • Tooth face: Green nylon cloth • Character:General	• Tooth type:T5 • Surface: Green nylon cloth • Tooth face: Green nylon cloth • Character:General	• Tooth type:T5 • Surface: ESD Black cloth • Tooth face: ESD Black cloth • Character:ESD	• Tooth type:T5 • Surface: Black polyurethane • Tooth face: ESD Black cloth • Character:ESD
C	C1	N	N1
Underlying Parameter			
• Tooth type:T5 • Surface: Red rubber 2mm • Tooth face: Green nylon cloth • CharacterAnti-slip	• Tooth type:T5 • Surface: Yellow rubber 2mm • Tooth face: Green nylon cloth • Character:Anti-slip	• Tooth type:T5 • Surface: Green rubber 2mm • Tooth face: Green nylon cloth • Character:Anti-slip	• Tooth type:T5 • Surface: Transparent polyurethane • Tooth face: Black Green nylon cloth • Character:Anti-slip
K	K2	K3	K7

Small conveyor for product out feeding

Product Application Case

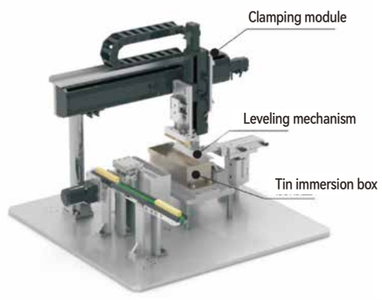

Dual Slots Aluminum Profilee



Conveyor Features

Conveyor with sharp end for compact connection,
one lane conveyor for small part positioning and transferring.

Conveyor Dimensions

Motor Specification: 6W ← Motion Direction

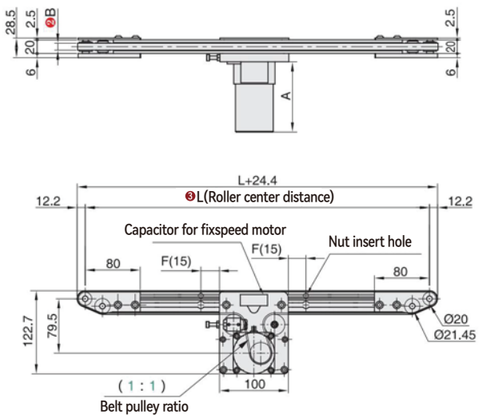

Conveyor Profile Section

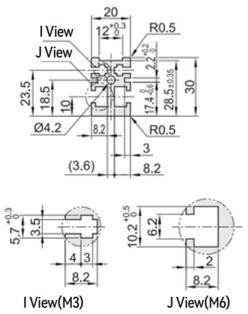

⚠ Nut specification inside aluminum profile slot:
Basis on L (Roller center distance)

330~999	1000~1499	1500~	Position	Spec	Status
4PCS	6PCS	8PCS	I View	M3 (hexagonal)	Accessory
4PCS	6PCS	8PCS	J View	M6(square)	Accessory

Conveyor speed and load capability

Form 1: Gear box ratio and conveyor speed(m/min)

Gear box radio	Fix-speed motor Speed(m/min)	Speed adjustable motor Speed(m/min)	Frequency motor Speed(m/min)	Brushless motor Speed(m/min)
5	—	—	—	—
7.5	—	—	—	—
10	—	—	—	—
12.5	10.9	6.5~10.9	—	—
15	9.0	5.4~9.0	—	—
18	7.5	4.5~7.5	—	—
25	5.4	3.3~5.4	—	—
30	4.5	2.7~4.5	—	—
36	3.8	2.3~3.8	—	—
50	2.7	1.6~2.7	—	—
60	2.3	1.4~2.3	—	—

Form 2: Pulse quality and conveyor speed(m/min)

Pulse quantity	Conveyor speed(m/min)	57 series stepper motor torque 2.3N.m	2.6N.m	3.1N.m	—	—	—	—
400	12.1	0~16.3	0~18.4	0~21.9	—	—	—	—
800	24.1	0~8.1	0~9.2	0~11.0	—	—	—	—
1600	48.2	0~4.1	0~4.6	0~5.5	—	—	—	—
3200	96.5	0~2.0	0~2.3	0~2.7	—	—	—	—
6400	192.9	0~1.0	0~1.2	0~1.4	—	—	—	—
12800	385.8	—	—	—	—	—	—	—
25600	771.7	—	—	—	—	—	—	—
51200	1543.4	—	—	—	—	—	—	—

Instrument 1.Set the current as default 2.Set the code on motor drive
3.Default torque can be modified by current setting.

⚠ Test Condition:B=10 L=800

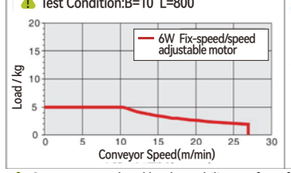

⚠ Speed calculation formula

1.Drive roller diameter D=32mm
2.Speed adjustable motor RPM=1350r/min
3.Frequency motor RPM=1680r/min
4.Brushless motor RPM=3000r/min
5.Belt pulley ratio i2=1:1

$$S=\frac{D\times\pi\times R\times i2}{i1\times1000}$$

$$S=\frac{32\times3.14\times1350\times1}{12.5\times1000}$$

S= 10.85184m/min

⚠ Test Condition:B=10 L=800 Current:5A

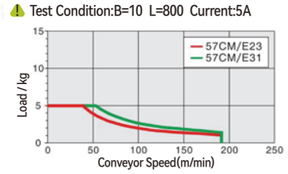

⚠ Speed calculation formula

1.Drive roller diameter D=32mm
2.Pulse quantity=400
3.Stepper motor angle J=1.8°
4.Belt pulley ratio i2=1:1

$$S=\frac{D\times\pi\times(M\times J/360\times60)\times i_2}{1000}$$

$$S=\frac{32\times3.14\times(400\times1.8/360\times60)\times1}{1000}$$

S= 12.0576m/min

⚠ Conveyor speed and load capability are for reference, the data is measured by testing under specific conditions.

※ Please do not exceed the allowed conveyor load and length.

Series Code	Type	※ Conveyor Features: Application Features	Motion Features	Material: Aluminum Profile	Motor Cover	Pulley Mounting Board	Surface Treatment: Aluminum Profile	Motor Cover	Pulley Mounting Board
BTB01	Baffle alignment type for small load	Cloth tooth surface to reduce noise support precision positioning and transferring	Forward/ Reverse transfer	Alloy			Surface electrophoresis	Painting	

Model ❶ Series Code	❷B-Belt Width	❸L-Conveyor Length 5mm	Motor Options ❹ Output Power(W)	❺ Voltage(V)	❻ Motor Type	❼ Gear box ratio	❽ Belt Spec	❾ Motor Brand
BTB01	10	330~2000	6	TA220 Single phase SA220 Three phase DC24 DC TA220 Single phase	IM Fix-speed motor SCM Speed adjustable motor	12.5 15 18 25 30 36 50 60 75 90 100 120 150 180	C(General type-Tooth with cloth face) C1(General type-Cloth face at both side) N(ESD-Cloth face at both side) N1(ESD-Tooth with cloth face) K(Anti-slip-Rubber surface) K2(Anti-slip-Rubber surface) K3(Anti-slip-Rubber surface) K7(Anti-slip-Tooth with cloth face)	GPG JSCC No motor
			❹ Motor Series	❺ Control method	❻ Output torque	❼ Drive type		❾ Stepper motor brand
			86 series stepper motor	CM Open loop CME Closed loop	23 26 31	MC Pulse type IO IO type EC IO typeEtherCAT RS RS485 ⚠ Default type: pulse type		S(Leadshine) No motor
			❹ Inertia	❺ Voltage(V)	❻ Output power			❾ Servo motor brand
			MH Servo motor	TA220 Single phase	200W 400W			S(Leadshine) X(Panasonic) No motor

※ Recommend motor brand JSCC

Model code example

"—" Model code example	Series Code		Belt Width		Conveyor Length		Motor Power		Voltage		Control Method		Ratio		Timing Belt Type		Motor Brand
Speed adjustable motor	BTB01	–	B10	–	L800	–	6	–	TA220	–	SCM	–	12.5	–	C	–	G
"—" Model code example	Series Code		Belt Width		Conveyor Length		Motor series		Control Method		Output torque		Drive type		Timing Belt Type		Motor Brand
Stepper motor	BTB01	–	B10	–	L800	–	57	–	CM	–	23	–	MC	–	C	–	S
"—" Model code example	Series Code		Belt Width		Conveyor Length		Inertia		Voltage		Output power		Drive type		Timing Belt Type		Motor Brand
Servo motor	BTB01	–	B10	–	L800	–	MH	–	TA220	–	200W	–	EC	–	C	–	X

Belt Specification

Underlying Parameter			
• Tooth type:T5 • Surface: White polyurethane • Tooth face: Green nylon cloth • Character:General	• Tooth type:T5 • Surface: Green nylon cloth • Tooth face: Green nylon cloth • Character:General	• Tooth type:T5 • Surface: ESD Black cloth • Tooth face: ESD Black cloth • Character:ESD	• Tooth type:T5 • Surface: Black polyurethane • Tooth face: ESD Black cloth • Character:ESD
C	C1	N	N1
Underlying Parameter			
• Tooth type:T5 • Surface: Red rubber 2mm • Tooth face: Green nylon cloth • Character:Anti-slip	• Tooth type:T5 • Surface: Yellow rubber 2mm • Tooth face: Green nylon cloth • Character:Anti-slip	• Tooth type:T5 • Surface: Green rubber 2mm • Tooth face: Green nylon cloth • Character:Anti-slip	• Tooth type:T5 • Surface: Transparent polyurethane • Tooth face: Black Green nylon cloth • Character:Anti-slip
K	K2	K3	K7

Small conveyor for product out feeding

Product Application Case

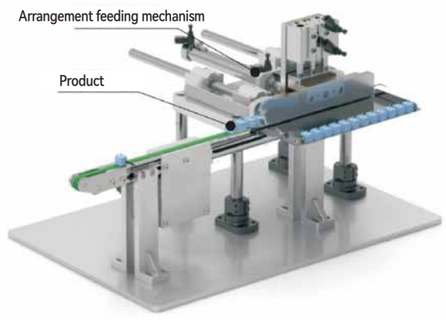

Three Slots Aluminum Profilee



Conveyor Features

Conveyor with sharp end for compact connection,
one lane conveyor for small part positioning and transferring,
suitable for medium load.

Conveyor Dimensions

Motor Specification : 6W ← Motion Direction

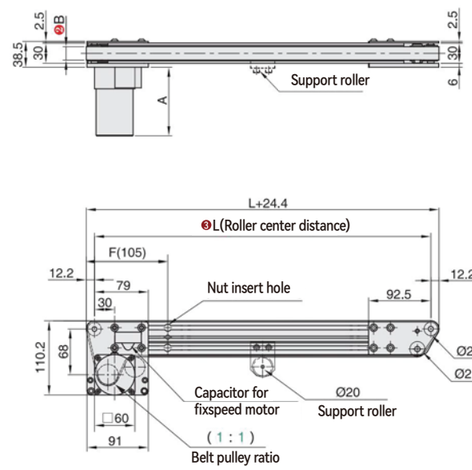

Conveyor Profile Section

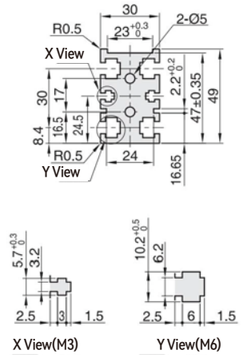

⚠ Nut specification inside aluminum profile slot:
Basis on L (Roller center distance)

245~999	1000~1499	1500~	Position	Spec	Status
4PCS	6PCS	8PCS	X View	M3 (hexagonal)	Accessory
4PCS	6PCS	8PCS	Y View	M6(square)	Accessory

Conveyor speed and load capability

Form 1: Gear box ratio and conveyor speed(m/min)

Gear box radio	Fix-speed motor Speed(m/min)	Speed adjustable motor Speed(m/min)	Frequency motor Speed(m/min)	Brushless motor Speed(m/min)
5	—	—	—	—
7.5	—	—	—	—
10	—	—	—	—
12.5	10.9	6.5~10.9	—	—
15	9.0	5.4~9.0	—	—
18	7.5	4.5~7.5	—	—
25	5.4	3.3~5.4	—	—
30	4.5	2.7~4.5	—	—
36	3.8	2.3~3.8	—	—
50	2.7	1.6~2.7	—	—
60	2.3	1.4~2.3	—	—

Form 2: Pulse quality and conveyor speed(m/min)

Pulse quantity	Conveyor speed(m/min)	57 series stepper motor torque 2.3N.m	2.6N.m	3.1N.m	—	—	—	—
400	12.1	0~16.3	0~18.4	0~21.9	—	—	—	—
800	24.1	0~8.1	0~9.2	0~11.0	—	—	—	—
1600	48.2	0~4.1	0~4.6	0~5.5	—	—	—	—
3200	96.5	0~2.0	0~2.3	0~2.7	—	—	—	—
6400	192.9	0~1.0	0~1.2	0~1.4	—	—	—	—
12800	385.8	—	—	—	—	—	—	—
25600	771.7	—	—	—	—	—	—	—
51200	1543.4	—	—	—	—	—	—	—

Instrument 1.Set the current as default 2.Set the code on motor drive
3.Default torque can be modified by current setting.

⚠ Test Condition:B=20 L=800

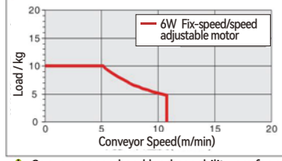

⚠ Speed calculation formula

1.Drive roller diameter D=32mm
2.Speed adjustable motor RPM=1350r/min
3.Frequency motor RPM=1680r/min
4.Brushless motor RPM=3000r/min
5.Belt pulley ratio i2=1:1

$S=\frac{D\times\pi\times R\times i2}{i1\times1000}$

$S=\frac{32\times3.14\times1350\times1}{12.5\times1000}$

S= 10.85184m/min

⚠ Test Condition:B=20 L=800 Current:5A

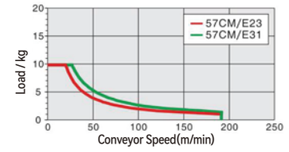

⚠ Speed calculation formula

1.Drive roller diameter D=32mm
2.Pulse quantity=400
3.Stepper motor angle J=1.8°
4.Belt pulley ratio i2=1:1

$S=\frac{D\times\pi\times(M\times J/(360\times60)\times i_2}{1000}$

$S=\frac{32\times3.14\times(400\times1.8/(360\times60)\times1}{1000}$

S= 12.0576m/min

⚠ Conveyor speed and load capability are for reference, the data is measured by testing under specific conditions.

※ Please do not exceed the allowed conveyor load and length.

Series Code	Type	※ Conveyor Features: Application Features	Motion Features	Material: Aluminum Profile	Material: Motor Cover	Material: Pulley Mounting Board	Surface Treatment: Aluminum Profile	Surface Treatment: Motor Cover	Surface Treatment: Pulley Mounting Board
BTA01	Baffle alignment type for small load	Cloth tooth surface to reduce noise support precision positioning and transferring	Forward/ Reverse transfer	Alloy			Surface electrophoresis	Painting	

Model: ❶ Series Code	❷B-Belt Width	❸L-Conveyor Length 5mm	Motor Options: ❹ Output Power(W)	❺ Voltage(V)	❻ Motor Type	❼ Gear box ratio	❽ Belt Spec	❾ Motor Brand
BTA01	20	245~2000	6	TA220 Single phase SA220 Three phase DC24 DC TA220 Single phase	IM Fix-speed motor SCM Speed adjustable motor	12.5 15 18 25 30 36 50 60 75 90 100 120 150 180	C(General type-Tooth with cloth face) C1(General type-Cloth face at both side) N(ESD-Cloth face at both side) N1(ESD-Tooth with cloth face) K(Anti-slip-Rubber surface) K2(Anti-slip-Rubber surface) K3(Anti-slip-Rubber surface) K7(Anti-slip-Tooth with cloth face)	GPG JSCC No motor
			❹ Motor Series	❺ Control method	❻ Output torque	❼ Drive type		❾ Stepper motor brand
			86 series stepper motor	CM Open loop CME Closed loop	23 26 31	MC Pulse type IO IO type EC IO typeEtherCAT RS RS485 ⚠ Default type: pulse type		S(Leadshine) No motor
			❹ Inertia	❺ Voltage(V)	❻ Output power			❾ Servo motor brand
			MH Servo motor	TA220 Single phase	200W 400W			S(Leadshine) X(Panasonic) No motor

※ Recommend motor brand JSCC

Model code example									
"—" Model code example	Series Code	Belt Width	Conveyor Length	Motor Power	Voltage	Control Method	Ratio	Timing Belt Type	Motor Brand
Speed adjustable motor	BTA01 –	B20 –	L800 –	6 –	TA220 –	SCM –	12.5 –	C –	G
"—" Model code example	Series Code	Belt Width	Conveyor Length	Motor series	Control Method	Output torque	Drive type	Timing Belt Type	Motor Brand
Stepper motor	BTA01 –	B20 –	L800 –	57 –	CM –	23 –	MC –	C –	S
"—" Model code example	Series Code	Belt Width	Conveyor Length	Inertia	Voltage	Output power	Drive type	Timing Belt Type	Motor Brand
Servo motor	BTA01 –	B20 –	L800 –	MH –	TA220 –	200W –	EC –	C –	X

Belt Specification

Underlying Parameter			
• Tooth type:T5 • Surface: White polyurethane • Tooth face: Green nylon cloth • Character:General	• Tooth type:T5 • Surface: Green nylon cloth • Tooth face: Green nylon cloth • Character:General	• Tooth type:T5 • Surface: ESD Black cloth • Tooth face: ESD Black cloth • Character:ESD	• Tooth type:T5 • Surface: Black polyurethane • Tooth face: ESD Black cloth • Character:ESD
C	C1	N	N1
			
Underlying Parameter			
• Tooth type:T5 • Surface: Red rubber 2mm • Tooth face: Green nylon cloth • Character:Anti-slip	• Tooth type:T5 • Surface: Yellow rubber 2mm • Tooth face: Green nylon cloth • Character:Anti-slip	• Tooth type:T5 • Surface: Green rubber 2mm • Tooth face: Green nylon cloth • Character:Anti-slip	• Tooth type:T5 • Surface: Transparent polyurethane • Tooth face: Black Green nylon cloth • Character:Anti-slip
K	K2	K3	K7
			

Small conveyor with pneumatic transfer module

Product Application Case

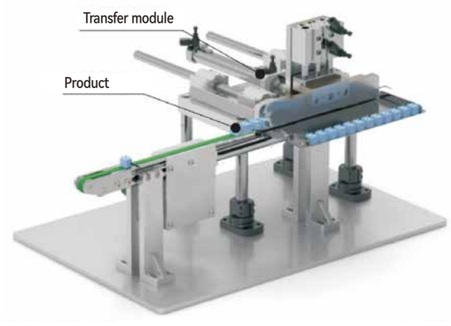

Three Slots Aluminum Profilee



Conveyor Features

Conveyor with sharp end for compact connection,
one lane conveyor for small part positioning and transferring,
suitable for medium load.

※ Please do not exceed the allowed conveyor load and length.

Series Code	Type	※ Conveyor Features		Material			Surface Treatment		
		Application Features	Motion Features	Aluminum Profile	Motor Cover	Pulley Mounting Board	Aluminum Profile	Motor Cover	Pulley Mounting Board
BTB01	Baffle alignment type for small load	Cloth tooth surface to reduce noise support precision positioning and transferring	Forward/ Reverse transfer	Alloy			Surface electrophoresis	Painting	

Model		❸L-Conveyor Length 5mm	Motor Options					
❶ Series Code	❷B-Belt Width		❹ Output Power(W)	❺ Voltage(V)	❻ Motor Type	❼ Gear box ratio	❽ Belt Spec	❾ Motor Brand
BTB01	20	330~2000	6	TA220 Single phase SA220 Three phase DC24 DC TA220 Single phase	IM Fix-speed motor SCM Speed adjustable motor	12.5 15 18 25 30 36 50 60 75 90 100 120 150 180	C(General type-Tooth with cloth face) C1(General type-Cloth face at both side) N(ESD-Cloth face at both side) N1(ESD-Tooth with cloth face) K(Anti-slip-Rubber surface) K2(Anti-slip-Rubber surface) K3(Anti-slip-Rubber surface) K7(Anti-slip-Tooth with cloth face)	GPG JSCC No motor
			❹ Motor Series	❺ Control method	❻ Output torque	❼ Drive type		❾ Stepper motor brand
			86 series stepper motor	CM Open loop CME Closed loop	23 26 31	MC Pulse type IO IO type EC IO typeEtherCAT RS RS485 ⚠ Default type: pulse type		S(Leadshine) No motor
			❹ Inertia	❺ Voltage(V)	❻ Output power			❾ Servo motor brand
			MH Servo motor	TA220 Single phase	200W 400W			S(Leadshine) X(Panasonic) No motor

※ Recommend motor brand JSCC

Model code example									
"—" Model code example	Series Code	Belt Width	Conveyor Length	Motor Power	Voltage	Control Method	Ratio	Timing Belt Type	Motor Brand
Speed adjustable motor	BTB01 –	B20 –	L800 –	6 –	TA220 –	SCM –	12.5 –	C –	G
"—" Model code example	Series Code	Belt Width	Conveyor Length	Motor series	Control Method	Output torque	Drive type	Timing Belt Type	Motor Brand
Stepper motor	BTB01 –	B20 –	L800 –	57 –	CM –	23 –	MC –	C –	S
"—" Model code example	Series Code	Belt Width	Conveyor Length	Inertia	Voltage	Output power	Drive type	Timing Belt Type	Motor Brand
Servo motor	BTB01 –	B20 –	L800 –	MH –	TA220 –	200W –	EC –	C –	X

Conveyor Dimensions

Motor Specification : 6W ⟵ Motion Direction

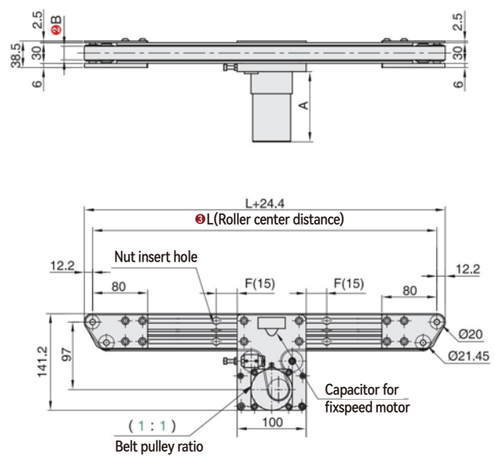

Conveyor Profile Section

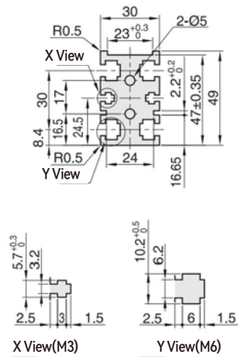

⚠ Nut specification inside aluminum profile slot:
Basis on L (Roller center distance)

330~999	1000~1499	1500~	Position	Spec	Status
4PCS	6PCS	8PCS	X View	M3 (hexagonal)	Accessory
4PCS	6PCS	8PCS	Y View	M6(square)	Accessory

Conveyor speed and load capability

Form 1: Gear box ratio and conveyor speed(m/min)

Gear box radio	Fix-speed motor Speed(m/min)	Speed adjustable motor Speed(m/min)	Frequency motor Speed(m/min)	Brushless motor Speed(m/min)
5	—	—	—	—
7.5	—	—	—	—
10	—	—	—	—
12.5	10.9	6.5~10.9	—	—
15	9.0	5.4~9.0	—	—
18	7.5	4.5~7.5	—	—
25	5.4	3.3~5.4	—	—
30	4.5	2.7~4.5	—	—
36	3.8	2.3~3.8	—	—
50	2.7	1.6~2.7	—	—
60	2.3	1.4~2.3	—	—

⚠ Test Condition:B=20 L=800

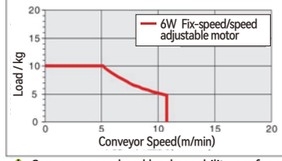

⚠ Speed calculation formula

1.Drive roller diameter D=32mm
2.Speed adjustable motor RPM=1350r/min
3.Frequency motor RPM=1680r/min
4.Brushless motor RPM=3000r/min
5.Belt pulley ratio i2=1:1

$$S=\frac{D\times\pi\times R\times i2}{i1\times1000}$$

$$S=\frac{32\times3.14\times1350\times1}{12.5\times1000}$$

S= 10.85184m/min

Form 2: Pulse quality and conveyor speed(m/min)

Pulse quantity	Conveyor speed(m/min)	57 series stepper motor torque 2.3N.m	2.6N.m	3.1N.m	—	—	—	—
400	12.1	0~16.3	0~18.4	0~21.9	—	—	—	—
800	24.1	0~8.1	0~9.2	0~11.0	—	—	—	—
1600	48.2	0~4.1	0~4.6	0~5.5	—	—	—	—
3200	96.5	0~2.0	0~2.3	0~2.7	—	—	—	—
6400	192.9	0~1.0	0~1.2	0~1.4	—	—	—	—
12800	385.8	—	—	—	—	—	—	—
25600	771.7	—	—	—	—	—	—	—
51200	1543.4	—	—	—	—	—	—	—

Instrument 1.Set the current as default 2.Set the code on motor drive
3.Default torque can be modified by current setting.

⚠ Test Condition:B=20 L=800 Current:5A

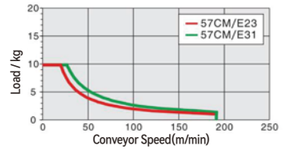

⚠ Speed calculation formula

1.Drive roller diameter D=32mm
2.Pulse quantity=400
3.Stepper motor angle J=1.8°
4.Belt pulley ratio i2=1:1

$$S=\frac{D\times\pi\times(M\times J/360\times60)\times i2}{1000}$$

$$S=\frac{32\times3.14\times(400\times1.8/360\times60)\times1}{1000}$$

S= 12.0576m/min

⚠ Conveyor speed and load capability are for reference, the data is measured by testing under specific conditions.

Belt Specification

Underlying Parameter			
• Tooth type:T5 • Surface: White polyurethane • Tooth face: Green nylon cloth • Character:General	• Tooth type:T5 • Surface: Green nylon cloth • Tooth face: Green nylon cloth • Character:General	• Tooth type:T5 • Surface: ESD Black cloth • Tooth face: ESD Black cloth • Character:ESD	• Tooth type:T5 • Surface: Black polyurethane • Tooth face: ESD Black cloth • Character:ESD
C	C1	N	N1
	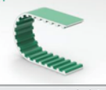		
Underlying Parameter			
• Tooth type:T5 • Surface: Red rubber 2mm • Tooth face: Green nylon cloth • Character:Anti-slip	• Tooth type:T5 • Surface: Yellow rubber 2mm • Tooth face: Green nylon cloth • Character:Anti-slip	• Tooth type:T5 • Surface: Green rubber 2mm • Tooth face: Green nylon cloth • Character:Anti-slip	• Tooth type:T5 • Surface: Transparent polyurethane • Tooth face: Black Green nylon cloth • Character:Anti-slip
K	K2	K3	K7
	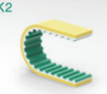		

Conveyor system with 90 degree corner

Product Application Case

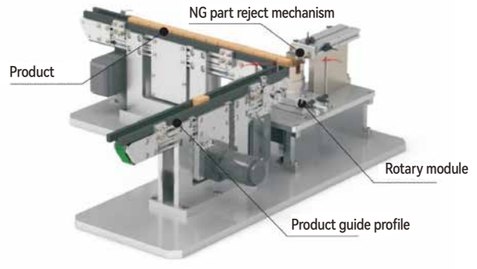

Dual Slots Aluminum Profilee



Conveyor Features

Dual lanes timing belt conveyor for pallet or fixture precision transferring, suitable for small load

※ Please do not exceed the allowed conveyor load and length.

Series Code	Type	※ Conveyor Features		Material			Surface Treatment		
		Application Features	Motion Features	Aluminum Profile	Motor Cover	Pulley Mounting Board	Aluminum Profile	Motor Cover	Pulley Mounting Board
BTH01	Baffle alignment type for small load	Cloth tooth surface to reduce noise support precision positioning and transferring	Forward/ Reverse transfer	Alloy			Surface electrophoresis	Painting	

Model		❸L-Conveyor Length 5mm	Motor Options						
❶ Series Code	❷B-Belt Width		❹ Output Power(W)	❺ Voltage(V)	❻ Motor Type	❼ Gear box ratio	❽ Belt Spec	❾ Motor Brand	
BTH01	80~300 Min.Step (5:mm)	255~2000	6 25	TA220 Single phase SA220 Three phase	IM Fix-speed motor SCM Speed adjustable motor INV VFD type	5 7.5 10 12.5 15 18 25 30 36 50 60 75 90 100 120 150 180 ⚠ When motor power is 6W gear box ratio can not be 5~10.	C(General type-Tooth with cloth face) C1(General type-Cloth face at both side) N(ESD-Cloth face at both side) N1(ESD-Tooth with cloth face) K(Anti-slip-Rubber surface) K2(Anti-slip-Rubber surface) K3(Anti-slip-Rubber surface) K7(Anti-slip-Tooth with cloth face)	GPG JSCC No motor ZD No motor	
			25	DC24 DC TA220 Single phase	KMC Speed adjustable motor SWS Motor with drive				
			❹ Motor Series	❺ Control method	❻ Output torque	❼ Drive type		❾ Stepper motor brand	
			86 series stepper motor	CM Open loop CME Closed loop	23 26 31	MC Pulse type IO IO type EC IO typeEtherCAT RS RS485 ⚠ Default type: pulse type		S(Leadshine) No motor	
			❹ Inertia	❺ Voltage(V)	❻ Output power			❾ Servo motor brand	
			MH Servo motor	TA220 Single phase	200W			S(Leadshine) X(Panasonic) No motor	

※ Recommend motor brand JSCC

Model code example	Conveyor Model	Belt Width	Conveyor Length	Output Power	Voltage	Control Method	Ratio	Belt Type	Motor Brand
Speed adjustable motor	BTH01–	B80	– L800	– 6	– TA220	– SCM	– 12.5	– C	– G
Model code example	Conveyor Model	Belt Width	Conveyor Length	Motor series	Control Method	Output torque	Drive type	Belt Type	Motor Brand
Stepper motor	BTH01–	B80	– L800	– 57	– CM	– 23	– MC	– C	– S
Model code example	Conveyor Model	Belt Width	Conveyor Length	Inertia	Voltage	Output power	Drive type	Belt Type	Motor Brand
Servo motor	BTH01–	B80	– L800	– MH	– TA220	– 200W	– EC	– C	– X

Recommend belt width and conveyor length

Model	B	L255 ≀ 300	L305 ≀ 500	L505 ≀ 600	L605 ≀ 800	L805 ≀ 900	L905 ≀ 2000
BTH01	80~110	●	●	●	●	●	●
	115~160	●	●	●	●	●	●
	165~210	●	●	●	●	●	●
	215~260	●	●	●	●	●	●
	265~300	●	●	●	●	●	●

Conveyor Dimensions

Motor Specification : 6W ← Motion Direction

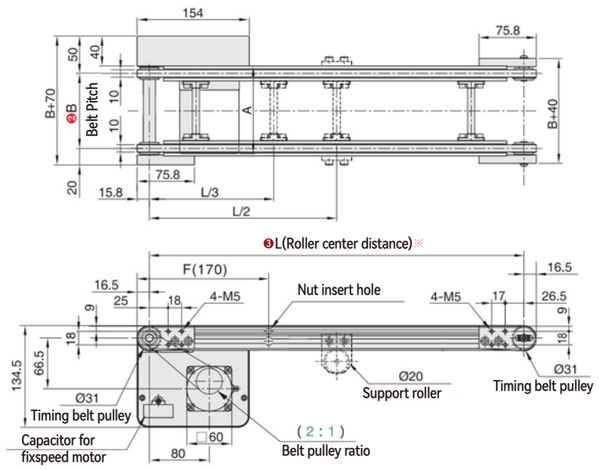

Conveyor Profile Section

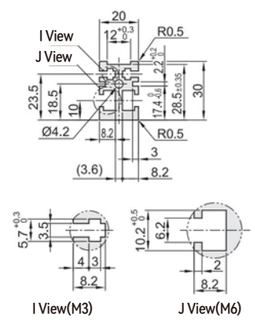

⚠ Nut specification inside aluminum profile slot: Basis on L (Roller center distance)

255~999	1000~1499	1500~	Position	Spec	Status
4PCS	6PCS	8PCS	I View	M3 (hexagonal)	Accessory
4PCS	6PCS	8PCS	J View	M6(square)	Accessory

Conveyor speed and load capability

Form 1: Gear box ratio and conveyor speed(m/min)

Gear box radio	Fix-speed motor Speed(m/min)	Speed adjustable motor Speed(m/min)	Frequency motor Speed(m/min)	Brushless motor Speed(m/min)
5	54.3	32.6~54.3	67.5	0~120.6
7.5	36.2	21.7~36.2	45.0	0~80.4
10	27.1	16.3~27.1	33.8	0~60.3
12.5	21.7	13.0~21.7	27.0	0~48.2
15	18.1	10.9~18.1	22.5	0~40.2
18	15.1	9.0~15.1	18.8	0~33.5
25	10.9	6.5~10.9	13.5	0~24.1
30	9.0	5.4~9.0	11.3	0~20.1
36	7.5	4.5~7.5	9.4	0~16.7
50	5.4	3.3~5.4	6.8	0~12.1
60	4.5	2.7~4.5	5.6	0~10.0

Form 2: Pulse quality and conveyor speed(m/min)

Pulse quantity	Conveyor speed(m/min)	57 series stepper motor torque 2.3N.m	2.6N.m	3.1N.m	–	–	–	–
400	24.1	0~4.1	0~4.6	0~5.5	–	–	–	–
800	48.2	0~2.0	0~2.3	0~2.7	–	–	–	–
1600	96.5	0~1.0	0~1.1	0~1.4	–	–	–	–
3200	192.9	0~0.5	0~0.6	0~0.7	–	–	–	–
6400	385.8	0~0.3	0~0.3	0~0.3	–	–	–	–
12800	771.7	–	–	–	–	–	–	–
25600	1543.4	–	–	–	–	–	–	–
51200	3086.7	–	–	–	–	–	–	–

Instrument 1.Set the current as default 2.Set the code on motor drive 3.Default torque can be modified by current setting.

⚠ Test Condition:B=80 L=800

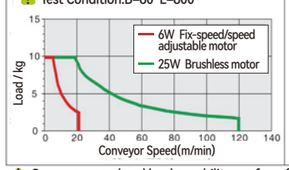

⚠ Speed calculation formula

1.Drive roller diameter D=32mm
2.Speed adjustable motor RPM=1350r/min
3.Frequency motor RPM=1680r/min
4.Brushless motor RPM=3000r/min
5.Belt pulley ratio i2=2:1

$S=\frac{D\times\pi\times R\times i2}{i1\times1000}$

$S=\frac{32\times3.14\times1350\times2}{12.5\times1000}$

S= 21.70368m/min

⚠ Test Condition:B=80 L=800 Current:5A

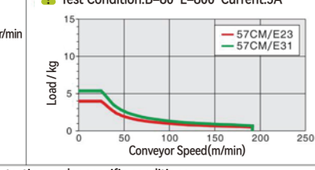

⚠ Speed calculation formula

1.Drive roller diameter D=32mm
2.Pulse quantity=400
3.Stepper motor angle J=1.8°
4.Belt pulley ratio i2=2:1

$S=\frac{D\times\pi\times(M\times J/360\times60)\times i_2}{1000}$

$S=\frac{32\times3.14\times(400\times1.8/360\times60)\times2}{1000}$

S= 24.1152m/min

⚠ Conveyor speed and load capability are for reference, the data is measured by testing under specific conditions.

Belt Specification

Underlying Parameter			
• Tooth type:T5 • Surface: White polyurethane • Tooth face: Green nylon cloth • Character:General	• Tooth type:T5 • Surface: Green nylon cloth • Tooth face: Green nylon cloth • Character:General	• Tooth type:T5 • Surface: ESD Black cloth • Tooth face: ESD Black cloth • Character:ESD	• Tooth type:T5 • Surface: Black polyurethane • Tooth face: ESD Black cloth • Character:ESD
C	C1	N	N1
Underlying Parameter			
• Tooth type:T5 • Surface: Red rubber 2mm • Tooth face: Green nylon cloth • Character:Anti-slip	• Tooth type:T5 • Surface: Yellow rubber 2mm • Tooth face: Green nylon cloth • Character:Anti-slip	• Tooth type:T5 • Surface: Green rubber 2mm • Tooth face: Green nylon cloth • Character:Anti-slip	• Tooth type:T5 • Surface: Transparent polyurethane • Tooth face: Black Green nylon cloth • Character:Anti-slip
K	K2	K3	K7

Conveyor system with transfer module

Product Application Case

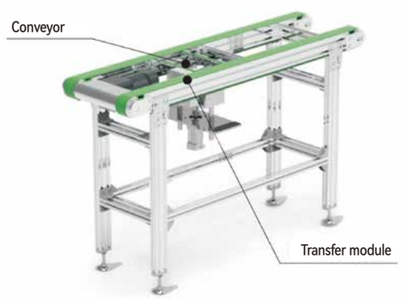

Dual Slots Aluminum Profilee

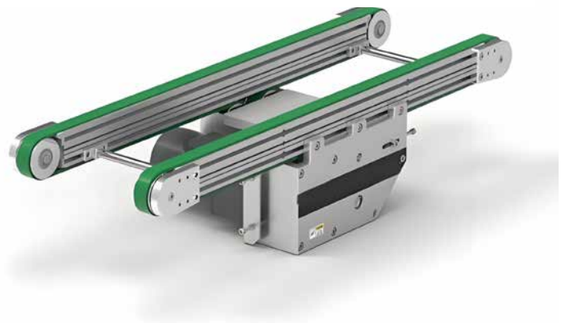

Conveyor Features

Dual lanes timing belt conveyor for pallet or fixture precision transferring, suitable for small load

※ Please do not exceed the allowed conveyor load and length.

Series Code	Type	※ Conveyor Features		Material			Surface Treatment		
		Application Features	Motion Features	Aluminum Profile	Motor Cover	Pulley Mounting Board	Aluminum Profile	Motor Cover	Pulley Mounting Board
BTM01	Baffle alignment type for small load	Cloth tooth surface to reduce noise support precision positioning and transferring	Forward/ Reverse transfer	Alloy			Surface electrophoresis	Painting	

Model		❸L-Conveyor Length 5mm	Motor Options				❽ Belt Spec	❾ Motor Brand
❶ Series Code	❷B-Belt Width		❹ Output Power(W)	❺ Voltage(V)	❻ Motor Type	❼ Gear box ratio		
BTM01	80~300 Min.Step (5:mm)	365~2000	6 25	TA220 Single phase SA220 Three phase	IM Fix-speed motor SCM Speed adjustable motor INV VFD type	5 7.5 10 12.5 15 18 25 30 36 50 60 75 90 100 120 150 180 ⚠ When motor power is 6W gear box ratio can not be 5~10.	C(General type-Tooth with cloth face) C1(General type-Cloth face at both side) N(ESD-Cloth face at both side) N1(ESD-Tooth with cloth face) K(Anti-slip-Rubber surface) K2(Anti-slip-Rubber surface) K3(Anti-slip-Rubber surface) K7(Anti-slip-Tooth with cloth face)	GPG JSCC No motor ZD No motor
			25	DC24 DC TA220 Single phase	KMC Speed adjustable motor SWS Motor with drive			
			❹ Motor Series	❺ Control method	❻ Output torque	❼ Drive type		❾ Stepper motor brand
			86 series stepper motor	CM Open loop CME Closed loop	23 26 31	MC Pulse type IO IO type EC IO typeEtherCAT RS RS485 ⚠ Default type: pulse type		S(Leadshine) No motor
			❹ Inertia	❺ Voltage(V)	❻ Output power			❾ Servo motor brand
			MH Servo motor	TA220 Single phase	200W			S(Leadshine) X(Panasonic) No motor

※ Recommend motor brand JSCC

Model code example

"—" Model code example	Conveyor Model	Belt Width	Conveyor Length	Output Power	Voltage	Control Method	Ratio	Belt Type	Motor Brand
Speed adjustable motor	BTM01	B80	L800	6	TA220	SCM	12.5	C	G

"—" Model code example	Conveyor Model	Belt Width	Conveyor Length	Motor series	Control Method	Output torque	Drive type	Belt Type	Motor Brand
Stepper motor	BTM01	B80	L800	57	CM	23	MC	C	S

"—" Model code example	Conveyor Model	Belt Width	Conveyor Length	Inertia	Voltage	Output power	Drive type	Belt Type	Motor Brand
Servo motor	BTM01	B80	L800	MH	TA220	200W	EC	C	X

Recommend belt width and conveyor length

Model	B	L365 ≀ 500	L505 ≀ 600	L605 ≀ 800	L805 ≀ 900	L905 ≀ 1000	L1005 ≀ 2000
BTM01	80~110	●	●	●	●	●	●
	115~160	●	●	●	●	●	●
	165~210	●	●	●	●	●	●
	215~260	●	●	●	●	●	●
	265~300	●	●	●	●	●	●

Conveyor Dimensions

Motor Specification : 6W ⟵ Motion Direction

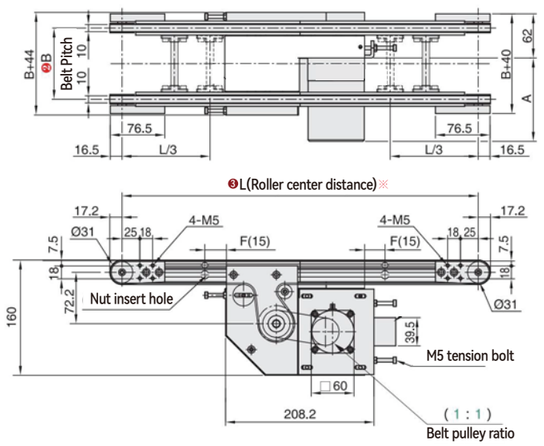

Conveyor Profile Section

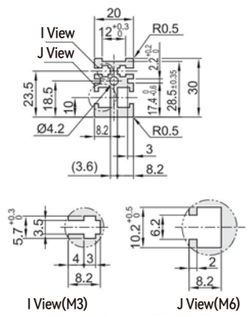

⚠ Nut specification inside aluminum profile slot: Basis on L (Roller center distance)

365~999	1000~1499	1500~	Position	Spec	Status
4PCS	6PCS	8PCS	I View	M3 (hexagonal)	Accessory
4PCS	6PCS	8PCS	J View	M6(square)	Accessory

Conveyor speed and load capability

Form 1: Gear box ratio and conveyor speed(m/min)

Gear box radio	Fix-speed motor Speed(m/min)	Speed adjustable motor Speed(m/min)	Frequency motor Speed(m/min)	Brushless motor Speed(m/min)
5	42.4	25.4~42.4	52.8	0~94.2
7.5	28.3	17.0~28.3	35.2	0~62.8
10	21.2	12.7~21.2	26.4	0~47.1
12.5	17.0	10.2~17.0	21.1	0~37.7
15	14.1	8.5~14.1	17.6	0~31.4
18	11.8	7.1~11.8	14.7	0~26.2
25	8.5	5.1~8.5	10.6	0~18.8
30	7.1	4.2~7.1	8.8	0~15.7
36	5.9	3.5~5.9	7.3	0~13.1
50	4.2	2.5~4.2	5.3	0~9.4
60	3.5	2.1~3.5	4.4	0~7.9

⚠ Test Condition:B=80 L=800

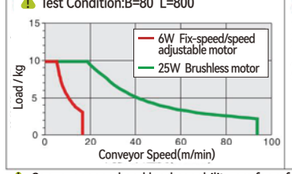

⚠ Speed calculation formula

1.Drive roller diameter D=50mm
2.Speed adjustable motor RPM=1350r/min
3.Frequency motor RPM=1680r/min
4.Brushless motor RPM=3000r/min
5.Belt pulley ratio i2=1:1

$$S=\frac{D\times\pi\times R\times i2}{i1\times1000}$$

$$S=\frac{50\times3.14\times1350\times1}{12.5\times1000}$$

S= 16.956m/min

Form 2: Pulse quality and conveyor speed(m/min)

Pulse quantity	Conveyor speed(m/min)	57 series stepper motor torque 2.3N.m	2.6N.m	3.1N.m	—	—	—	—
400	18.8	0~10.4	0~11.8	0~14.0	—	—	—	—
800	37.7	0~5.2	0~5.9	0~7.0	—	—	—	—
1600	75.4	0~2.6	0~2.9	0~3.5	—	—	—	—
3200	150.7	0~1.3	0~1.5	0~1.8	—	—	—	—
6400	301.4	0~0.7	0~0.7	0~0.9	—	—	—	—
12800	602.9	—	—	—	—	—	—	—
25600	1205.8	—	—	—	—	—	—	—
51200	2411.5	—	—	—	—	—	—	—

Instrument 1.Set the current as default 2.Set the code on motor drive
3.Default torque can be modified by current setting.

⚠ Test Condition:B=80 L=800 Current:5A

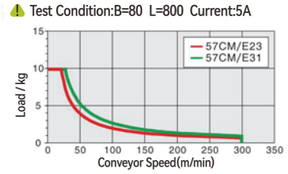

⚠ Speed calculation formula

1.Drive roller diameter D=50mm
2.Pulse quantity=400
3.Stepper motor angle J=1.8°
4.Belt pulley ratio i2=1:1

$$S=\frac{D\times\pi\times(M\times J/360\times60)\times i_2}{1000}$$

$$S=\frac{50\times3.14\times(400\times1.8/360\times60)\times1}{1000}$$

S= 18.84m/min

⚠ Conveyor speed and load capability are for reference, the data is measured by testing under specific conditions.

Belt Specification

Underlying Parameter			
• Tooth type:T5 • Surface: White polyurethane • Tooth face: Green nylon cloth • Character:General	• Tooth type:T5 • Surface: Green nylon cloth • Tooth face: Green nylon cloth • Character:General	• Tooth type:T5 • Surface: ESD Black cloth • Tooth face: ESD Black cloth • Character:ESD	• Tooth type:T5 • Surface: Black polyurethane • Tooth face: ESD Black cloth • Character:ESD
C	C1	N	N1
	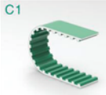		
Underlying Parameter			
• Tooth type:T5 • Surface: Red rubber 2mm • Tooth face: Green nylon cloth • Character:Anti-slip	• Tooth type:T5 • Surface: Yellow rubber 2mm • Tooth face: Green nylon cloth • Character:Anti-slip	• Tooth type:T5 • Surface: Green rubber 2mm • Tooth face: Green nylon cloth • Character:Anti-slip	• Tooth type:T5 • Surface: Transparent polyurethane • Tooth face: Black Green nylon cloth • Character:Anti-slip
K	K2	K3	K7
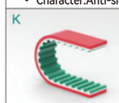			

Conveyor for fixture pressing process

Product Application Case

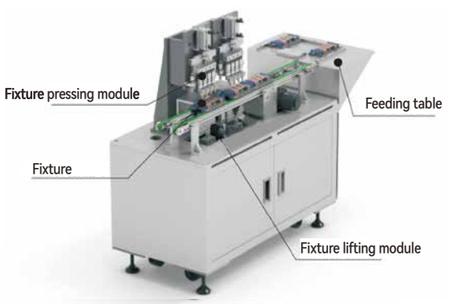

Three Slots Aluminum Profilee



Conveyor Features

Dual lanes timing belt conveyor for pallet or fixture precision transferring, suitable for medium load

※ Please do not exceed the allowed conveyor load and length.

Series Code	Type	※ Conveyor Features		Material			Surface Treatment		
		Application Features	Motion Features	Aluminum Profile	Motor Cover	Pulley Mounting Board	Aluminum Profile	Motor Cover	Pulley Mounting Board
BTJ01	Baffle alignment type for small load	Cloth tooth surface to reduce noise support precision positioning and transferring	Forward/ Reverse transfer	Alloy			Surface electrophoresis	Painting	

Model		❸L-Conveyor Length 5mm	Motor Options						
❶ Series Code	❷B-Belt Width		❹ Output Power(W)	❺ Voltage(V)	❻ Motor Type	❼ Gear box ratio	❽ Belt Spec	❾ Motor Brand
BTJ01	80~300 Min.Step (5:mm)	265~3000	25 40	TA220 Single phase SA220 Three phase	IM Fix-speed motor SCM Speed adjustable motor INV VFD type	5 7.5 10 12.5 15 18 25 30 36 50 60 75 90 100 120 150 180	C(General type- White polyurethane) C1(General type-Cloth+ Green polyurethane) C2(General type- White polyurethane) N(ESD-Cloth+ Black polyurethane) N1(ESD- Black polyurethane) K(Anti-slip- Red polyurethane) K1(Anti-slip- Black polyurethane) K2(Anti-slip- Yellow polyurethane)	GPG JSCC No motor ZD No motor
			25 40	DC24 DC TA220 Single phase	KMC Speed adjustable motor Motor with drive			
			❹ Motor Series	❺ Control method	❻ Output torque	❼ Drive type		❾ Stepper motor brand
			57 series stepper motor	CM Open loop	23 26 31	MC Pulse type IO IO type EC IO typeEtherCAT RS RS485 ⚠ Default type: pulse type		S(Leadshine) No motor
			86 series stepper motor	CME Closed loop	45 80 120			
			❹ Inertia	❺ Voltage(V)	❻ Output power			❾ Servo motor brand
			MH Servo motor	TA220 Single phase	400W 750W			S(Leadshine) X(Panasonic) No motor

※ Recommend motor brand JSCC

Model code example	Conveyor Model	Belt Width	Conveyor Length	Output Power	Voltage	Control Method	Ratio	Belt Type	Motor Brand
Speed adjustable motor	BTJ01–	B80	–L1000 –	25	– TA220 –	SCM	– 12.5	– C	– G
Model code example	Conveyor Model	Belt Width	Conveyor Length	Motor series	Control Method	Output torque	Drive type	Belt Type	Motor Brand
Stepper motor	BTJ01–	B80	–L1000 –	57	– CM	– 23	– MC	– C	– S
Model code example	Conveyor Model	Belt Width	Conveyor Length	Inertia	Voltage	Output power	Drive type	Belt Type	Motor Brand
Servo motor	BTJ01–	B80	–L1000 –	MH	– TA220 –	400W	– EC	– C	– X

Recommend belt width and conveyor length

Model	B	L265 ≀ 300	L305 ≀ 500	L505 ≀ 600	L605 ≀ 800	L805 ≀ 900	L905 ≀ 3000
BTJ01	80~100	●	●	●	●	●	●
	110~150	●	●	●	●	●	●
	160~200	●	●	●	●	●	●
	210~250	●	●	●	●	●	●
	260~300	●	●	●	●	●	●

Conveyor Dimensions

Motor Specification: 25W ← Motion Direction

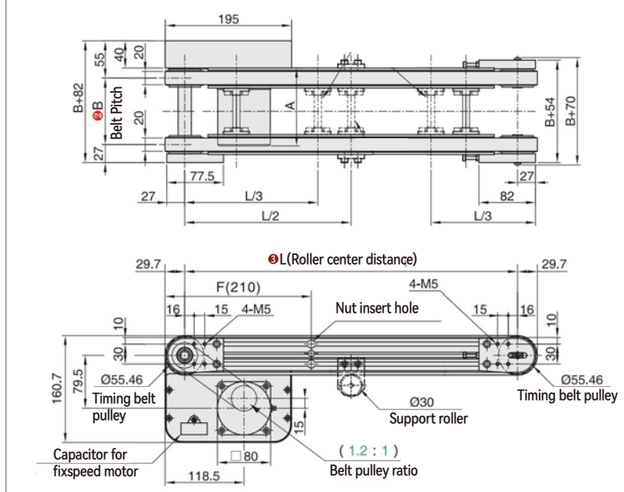

Conveyor Profile Section

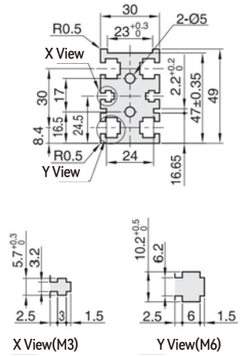

⚠ Nut specification inside aluminum profile slot: Basis on L (Roller center distance)

265~999	1000~1499	1500~	Position	Spec	Status
4PCS	6PCS	8PCS	X View	M3 (hexagonal)	Accessory
4PCS	6PCS	8PCS	Y View	M6(square)	Accessory

Conveyor speed and load capability

Form 1: Gear box ratio and conveyor speed(m/min)

Gear box radio	Fix-speed motor Speed(m/min)	Speed adjustable motor Speed(m/min)	Frequency motor Speed(m/min)	Brushless motor Speed(m/min)
5	58.0	34.8~58.0	72.2	0~128.9
7.5	38.7	23.2~38.7	48.1	0~85.9
10	29.0	17.4~29.0	36.1	0~64.4
12.5	23.2	13.9~23.2	28.9	0~51.5
15	19.3	11.6~19.3	24.1	0~43.0
18	16.1	9.7~16.1	20.0	0~35.8
25	11.6	7.0~11.6	14.4	0~25.8
30	9.7	5.8~9.7	12.0	0~21.5
36	8.1	4.8~8.1	10.0	0~17.9
50	5.8	3.5~5.8	7.2	0~12.9
60	4.8	2.9~4.8	6.0	0~10.7

Form 2: Pulse quality and conveyor speed(m/min)

Pulse quantity	Conveyor speed(m/min)	57 series stepper motor torque 2.3N.m	2.6N.m	3.1N.m	86 series stepper motor torque 4.5N.m	8.0N.m	12.0N.m	–
400	25.8	0~6.3	0~7.1	0~8.5	0~12.4	0~22.0	0~33.1	–
800	51.5	0~3.1	0~3.6	0~4.3	0~6.2	0~11.0	0~16.5	–
1600	103.1	0~1.6	0~1.8	0~2.1	0~3.1	0~5.5	0~8.3	–
3200	206.2	0~0.8	0~0.9	0~1.1	0~1.5	0~2.8	0~4.1	–
6400	412.4	0~0.4	0~0.4	0~0.5	0~0.8	0~1.4	0~2.1	–
12800	824.7	–	–	–	–	–	–	–
25600	1649.5	–	–	–	–	–	–	–
51200	3299.0	–	–	–	–	–	–	–

Instrument 1.Set the current as default 2.Set the code on motor drive 3.Default torque can be modified by current setting.

⚠ Test Condition:B=80 L=1000

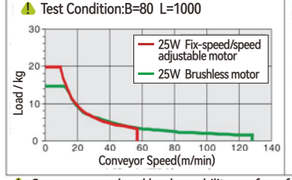

⚠ Speed calculation formula

1.Drive roller diameter D=57mm
2.Speed adjustable motor RPM=1350r/min
3.Frequency motor RPM=1680r/min
4.Brushless motor RPM=3000r/min
5.Belt pulley ratio i2=1.2:1

$$S=\frac{D\times\pi\times R\times i2}{i1\times1000}$$

$$S=\frac{57\times3.14\times1350\times1.2}{12.5\times1000}$$

S=23.195808m/min

⚠ Test Condition:B=80 L=1000 Current:5A

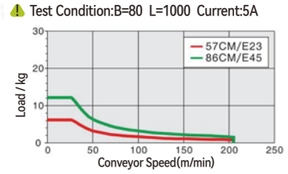

⚠ Speed calculation formula

1.Drive roller diameter D=57mm
2.Pulse quantity=400
3.Stepper motor angle J=1.8°
4.Belt pulley ratio i2=1.2:1

$$S=\frac{D\times\pi\times(M\times J/360\times60)\times i_2}{1000}$$

$$S=\frac{57\times3.14\times(400\times1.8/360\times60)\times1.2}{1000}$$

S=25.77312m/min

⚠ Conveyor speed and load capability are for reference, the data is measured by testing under specific conditions.

Belt Specification

Underlying Parameter			
• Tooth type:T10 • Surface: White polyurethane • Tooth face: Green nylon cloth • Character:General	• Tooth type:T10 • Surface: Green nylon cloth • Tooth face: Green nylon cloth • Character:General	• Tooth type:T10 • Surface: White polyurethane • Tooth face: Black nylon cloth • Character:General	• Tooth type:T10 • Surface: Black polyurethane • Tooth face: ESD Black cloth • Character:ESD
C	C1	C2	N
Underlying Parameter			
• Tooth type:T10 • Surface: Black polyurethane • Tooth face: ESD Black cloth • Character:ESD	• Tooth type:T10 • Surface: Red polyurethane • Tooth face: Green nylon cloth • Character:Anti-slip	• Tooth type:T10 • Surface: Black polyurethane • Tooth face: Green nylon cloth • Character:Anti-slip	• Tooth type:T10 • Surface: Yellow polyurethane • Tooth face: Green nylon cloth • Character:Anti-slip
N1	K	K1	K2

Conveyor for pallet unloading

Product Application Case

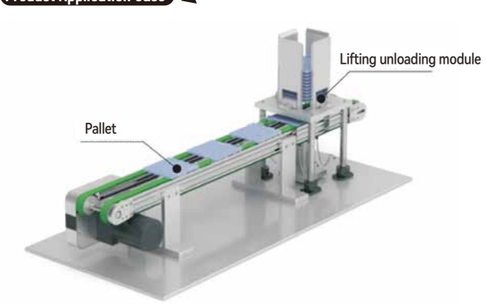

Three Slots Aluminum Profilee

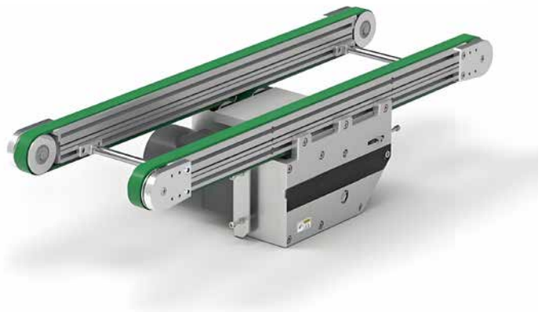

Conveyor Features

Dual lanes timing belt conveyor for pallet or
fixture precision transferring, suitable for medium load

※ Please do not exceed the allowed conveyor load and length.

Series Code	Type	※ Conveyor Features		Material			Surface Treatment		
		Application Features	Motion Features	Aluminum Profile	Motor Cover	Pulley Mounting Board	Aluminum Profile	Motor Cover	Pulley Mounting Board
BTN01	Baffle alignment type for small load	Cloth tooth surface to reduce noise support precision positioning and transferring	Forward/ Reverse transfer	Alloy			Surface electrophoresis	Painting	

Model		❸L-Conveyor Length 5mm	Motor Options						
❶ Series Code	❷B-Belt Width		❹ Output Power(W)	❺ Voltage(V)	❻ Motor Type	❼ Gear box ratio	❽ Belt Spec	❾ Motor Brand	
BTN01	80~300 Min.Step (5:mm)	365~3000	25 40	TA220 Single phase SA220 Three phase	IM Fix-speed motor SCM Speed adjustable motor INV VFD type	5 7.5 10 12.5 15 18 25 30 36 50 60 75 90 100 120 150 180	C(General type- White polyurethane) C1(General type-Cloth+ Green polyurethane) C2(General type- White polyurethane) N(ESD-Cloth+ Black polyurethane) N1(ESD- Black polyurethane) K(Anti-slip- Red polyurethane) K1(Anti-slip- Black polyurethane) K2(Anti-slip- Yellow polyurethane)	GPG JSCC No motor	
			25 40	DC24 DC TA220 Single phase	KMC Speed adjustable motor SWS Motor with drive			ZD No motor	
			❹ Motor Series	❺ Control method	❻ Output torque	❼ Drive type		❾ Stepper motor brand	
			57 series stepper motor	CM Open loop	23 26 31	MC Pulse type IO IO type EC IO typeEtherCAT RS RS485 ⚠ Default type: pulse type		S(Leadshine) No motor	
			86 series stepper motor	CME Closed loop	45 80 120				
			❹ Inertia	❺ Voltage(V)	❻ Output power			❾ Servo motor brand	
			MH Servo motor	TA220 Single phase	400W 750W			S(Leadshine) X(Panasonic) No motor	

※ Recommend motor brand JSCC

Model code example	Conveyor Model	Belt Width	Conveyor Length	Output Power	Voltage	Control Method	Ratio	Belt Type	Motor Brand
Speed adjustable motor	BTN01	B80	L1000	25	TA220	SCM	12.5	C	G
Model code example	Conveyor Model	Belt Width	Conveyor Length	Motor series	Control Method	Output torque	Drive type	Belt Type	Motor Brand
Stepper motor	BTN01	B80	L1000	57	CM	23	MC	C	S
Model code example	Conveyor Model	Belt Width	Conveyor Length	Inertia	Voltage	Output power	Drive type	Belt Type	Motor Brand
Servo motor	BTN01	B80	L1000	MH	TA220	400W	EC	C	X

Recommend belt width and conveyor length

Model	B	L365 ≀ 500	L505 ≀ 600	L605 ≀ 800	L805 ≀ 900	L905 ≀ 1000	L1005 ≀ 3000
BTN01	80~100	●	●	●	●	●	●
	110~150	●	●	●	●	●	●
	160~200	●	●	●	●	●	●
	210~250	●	●	●	●	●	●
	260~300	●	●	●	●	●	●

Conveyor Dimensions

Motor Specification: 25W ← Motion Direction

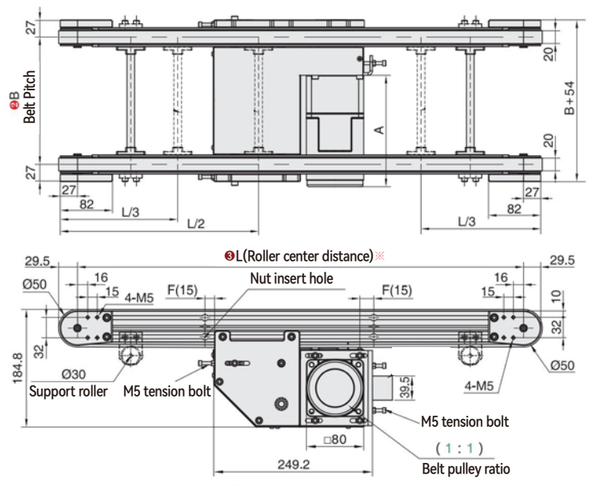

Conveyor Profile Section

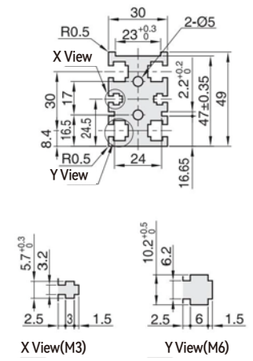

⚠ Nut specification inside aluminum profile slot:
Basis on L (Roller center distance)

365~999	1000~1499	1500~	Position	Spec	Status
4PCS	6PCS	8PCS	X View	M3 (hexagonal)	Accessory
4PCS	6PCS	8PCS	Y View	M6(square)	Accessory

Conveyor speed and load capability

Form 1: Gear box ratio and conveyor speed(m/min)

Gear box radio	Fix-speed motor Speed(m/min)	Speed adjustable motor Speed(m/min)	Frequency motor Speed(m/min)	Brushless motor Speed(m/min)
5	48.3	29.0~48.3	60.1	0~107.4
7.5	32.2	19.3~32.2	40.1	0~71.6
10	24.2	14.5~24.2	30.1	0~53.7
12.5	19.3	11.6~19.3	24.1	0~43.0
15	16.1	9.7~16.1	20.0	0~35.8
18	13.4	8.1~13.4	16.7	0~29.8
25	9.7	5.8~9.7	12.0	0~21.5
30	8.1	4.8~8.1	10.0	0~17.9
36	6.7	4.0~6.7	8.4	0~14.9
50	4.8	2.9~4.8	6.0	0~10.7
60	4.0	2.4~4.0	5.0	0~8.9

⚠ Test Condition:B=80 L=1000

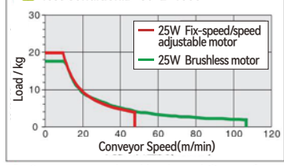

⚠ Speed calculation formula

1.Drive roller diameter D=57mm
2.Speed adjustable motor RPM=1350r/min
3.Frequency motor RPM=1680r/min
4.Brushless motor RPM=3000r/min
5.Belt pulley ratio i2=1.2:1

$$S=\frac{D\times\pi\times R\times i2}{i1\times1000}$$

$$S=\frac{57\times3.14\times1350\times1}{12.5\times1000}$$

S= 19.32984m/min

Form 2: Pulse quality and conveyor speed(m/min)

Pulse quantity	Conveyor speed(m/min)	57 series stepper motor torque 2.3N.m	2.6N.m	3.1N.m	86 series stepper motor torque 4.5N.m	8.0N.m	12.0N.m	—
400	21.5	0~9.1	0~10.3	0~12.2	0~17.8	0~31.7	0~47.7	—
800	43.0	0~4.5	0~5.1	0~6.1	0~8.9	0~15.9	0~23.8	—
1600	85.9	0~2.3	0~2.6	0~3.1	0~4.5	0~7.9	0~11.9	—
3200	171.8	0~1.1	0~1.3	0~1.5	0~2.2	0~4.0	0~6.0	—
6400	343.6	0~0.6	0~0.6	0~0.8	0~1.1	0~2.0	0~3.0	—
12800	687.3	—	—	—	—	—	—	—
25600	1374.6	—	—	—	—	—	—	—
51200	2749.1	—	—	—	—	—	—	—

Instrument 1.Set the current as default 2.Set the code on motor drive
3.Default torque can be modified by current setting.

⚠ Test Condition:B=80 L=1000 Current:5A

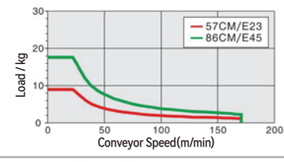

⚠ Speed calculation formula

1.Drive roller diameter D=57mm
2.Pulse quantity=400
3.Stepper motor angle J=1.8°
4.Belt pulley ratio i2=1.2:1

$$S=\frac{D\times\pi\times(M\times J/(360\times60)\times i_2}{1000}$$

$$S=\frac{57\times3.14\times(400\times1.8/(360\times60)\times1}{1000}$$

S=21.4776m/min

⚠ Conveyor speed and load capability are for reference, the data is measured by testing under specific conditions.

Belt Specification

Underlying Parameter			
• Tooth type:T10 • Surface: White polyurethane • Tooth face: Green nylon cloth • Character:General	• Tooth type:T10 • Surface: Green nylon cloth • Tooth face: Green nylon cloth • Character:General	• Tooth type:T10 • Surface: White polyurethane • Tooth face: Black nylon cloth • Character:General	• Tooth type:T10 • Surface: Black polyurethane • Tooth face: ESD Black cloth • Character:ESD
C	C1	C2	N
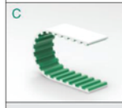			
Underlying Parameter			
• Tooth type:T10 • Surface: Black polyurethane • Tooth face: ESD Black cloth • Character:ESD	• Tooth type:T10 • Surface: Red polyurethane • Tooth face: Green nylon cloth • Character:Anti-slip	• Tooth type:T10 • Surface: Black polyurethane • Tooth face: Green nylon cloth • Character:Anti-slip	• Tooth type:T10 • Surface: Yellow polyurethane • Tooth face: Green nylon cloth • Character:Anti-slip
N1	K	K1	K2
		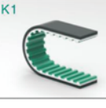	

Conveyor for fixture lifting and operating

Product Application Case

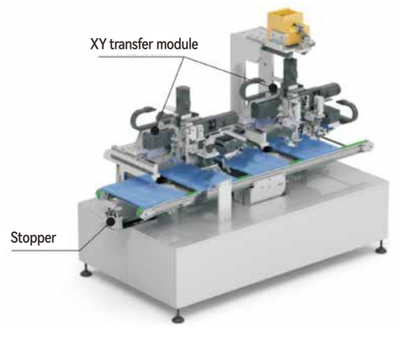

Three Slots Aluminum Profilee



Conveyor Features

Dual lanes timing belt conveyor for pallet or fixture precision transferring, suitable for medium load

Conveyor Dimensions

Motor Specification: 25W ← Motion Direction

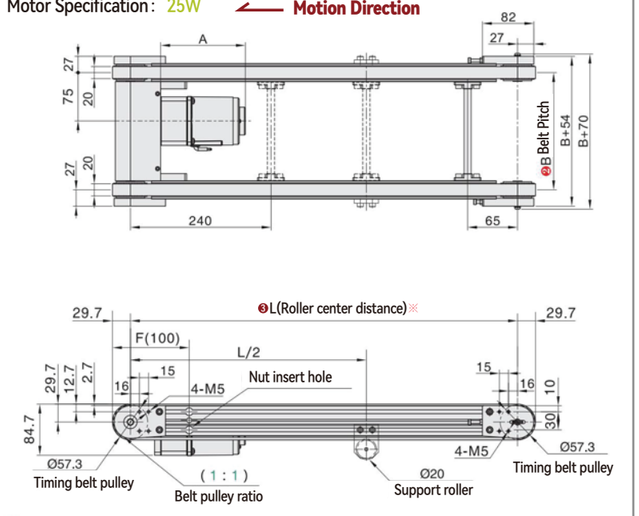

Conveyor Profile Section

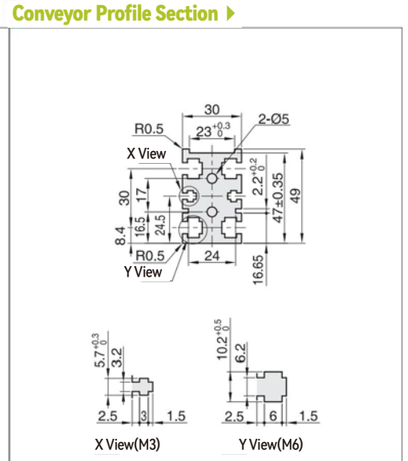

⚠ Nut specification inside aluminum profile slot: Basis on L (Roller center distance)

300~999	1000~1499	1500~	Position	Spec	Status
4PCS	6PCS	8PCS	X View	M3 (hexagonal)	Accessory
4PCS	6PCS	8PCS	Y View	M6(square)	Accessory

Conveyor speed and load capability

Form 1: Gear box ratio and conveyor speed(m/min)

Gear box radio	Fix-speed motor Speed(m/min)	Speed adjustable motor Speed(m/min)	Frequency motor Speed(m/min)	Brushless motor Speed(m/min)
5	48.3	29.0~48.3	60.1	0~107.4
7.5	32.2	19.3~32.2	40.1	0~71.6
10	24.2	14.5~24.2	30.1	0~53.7
12.5	19.3	11.6~19.3	24.1	0~43.0
15	16.1	9.7~16.1	20.0	0~35.8
18	13.4	8.1~13.4	16.7	0~29.8
25	9.7	5.8~9.7	12.0	0~21.5
30	8.1	4.8~8.1	10.0	0~17.9
36	6.7	4.0~6.7	8.4	0~14.9
50	4.8	2.9~4.8	6.0	0~10.7
60	4.0	2.4~4.0	5.0	0~8.9

Form 2: Pulse quality and conveyor speed(m/min)

Pulse quantity	Conveyor speed(m/min)	57 series stepper motor torque 2.3N.m	2.6N.m	3.1N.m	–	–	–	–
400	21.5	0~9.1	0~10.3	0~12.2	–	–	–	–
800	43.0	0~4.5	0~5.1	0~6.1	–	–	–	–
1600	85.9	0~2.3	0~2.6	0~3.1	–	–	–	–
3200	171.8	0~1.1	0~1.3	0~1.5	–	–	–	–
6400	343.6	0~0.6	0~0.6	0~0.8	–	–	–	–
12800	687.3	–	–	–	–	–	–	–
25600	1374.6	–	–	–	–	–	–	–
51200	2749.1	–	–	–	–	–	–	–

Instrument 1.Set the current as default 2.Set the code on motor drive
3.Default torque can be modified by current setting.

⚠ Test Condition:B=150 L=1000

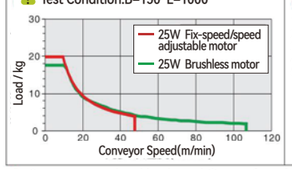

⚠ Speed calculation formula

1.Drive roller diameter D=57mm
2.Speed adjustable motor RPM=1350r/min
3.Frequency motor RPM=1680r/min
4.Brushless motor RPM=3000r/min
5.Belt pulley ratio i2=1:1

$$S=\frac{D\times\pi\times R\times i2}{i1\times1000}$$

$$S=\frac{57\times3.14\times1350\times1}{12.5\times1000}$$

S= 19.32984m/min

⚠ Test Condition:B=150 L=1000 Current:5A

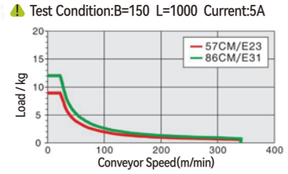

⚠ Speed calculation formula

1.Drive roller diameter D=57mm
2.Pulse quantity=400
3.Stepper motor angle J=1.8°
4.Belt pulley ratio i2=1:1

$$S=\frac{D\times\pi\times(M\times J/360\times60)\times i_2}{1000}$$

$$S=\frac{57\times3.14\times(400\times1.8/360\times60)\times1}{1000}$$

S=21.4776m/min

⚠ Conveyor speed and load capability are for reference, the data is measured by testing under specific conditions.

※ Please do not exceed the allowed conveyor load and length.

Series Code	Type	※ Conveyor Features: Application Features	Motion Features	Material: Aluminum Profile	Motor Cover	Pulley Mounting Board	Surface Treatment: Aluminum Profile	Motor Cover	Pulley Mounting Board
BTQ01	Baffle alignment type for small load	Cloth tooth surface to reduce noise support precision positioning and transferring	Forward/ Reverse transfer	Alloy			Surface electrophoresis	Painting	

Model ❶ Series Code	❷B-Belt Width	❸L-Conveyor Length 5mm	Motor Options ❹ Output Power(W)	❺ Voltage(V)	❻ Motor Type	❼ Gear box ratio	❽ Belt Spec	❾ Motor Brand
BTQ01	150~300 Min.Step (5:mm)	300~3000	25	TA220 Single phase	IM Fix-speed motor SCM Speed adjustable motor	5 7.5 10 12.5 15 18 25 30 36 50 60 75 90 100 120 150 180	C(General type- White polyurethane) C1(General type-Cloth+ Green polyurethane) C2(General type- White polyurethane) N(ESD-Cloth+ Black polyurethane) N1(ESD- Black polyurethane) K(Anti-slip- Red polyurethane) K1(Anti-slip- Black polyurethane) K2(Anti-slip- Yellow polyurethane)	GPG JSCC No motor
			25	SA220 Three phase	INV VFD type			

※ Recommend motor brand JSCC

Model code example	Conveyor Model	Belt Width	Conveyor Length	Output Power	Voltage	Control Method	Ratio	Belt Type	Motor Brand
Speed adjustable motor	BTQ01–	B150 –	L1000 –	25 –	TA220 –	SCM –	12.5 –	C –	G
Model code example	Conveyor Model	Belt Width	Conveyor Length	Motor series	Control Method	Output torque	Drive type	Belt Type	Motor Brand
Stepper motor	BTQ01–	B150 –	L1000 –	25 –	TA220 –	IM –	12.5 –	C –	G
Model code example	Conveyor Model	Belt Width	Conveyor Length	Inertia	Voltage	Output power	Drive type	Belt Type	Motor Brand
Servo motor	BTQ01–	B150 –	L1000 –	25 –	SA220 –	INV –	12.5 –	C –	G

Recommend belt width and conveyor length

Model	B	L300 ~ 500	L505 ~ 600	L605 ~ 800	L805 ~ 900	L905 ~ 1000	L1005 ~ 3000
BTQ01	150	●	●	●	●	●	●
	160~200	●	●	●	●	●	●
	210~250	●	●	●	●	●	●
	260~300	●	●	●	●	●	●
	–	–	–	–	–	–	–

Belt Specification

Underlying Parameter			
• Tooth type:T10 • Surface: White polyurethane • Tooth face: Green nylon cloth • Character:General	• Tooth type:T10 • Surface: Green nylon cloth • Tooth face: Green nylon cloth • Character:General	• Tooth type:T10 • Surface: White polyurethane • Tooth face: Black nylon cloth • Character:General	• Tooth type:T10 • Surface: Black polyurethane • Tooth face: ESD Black cloth • Character:ESD
C	C1	C2	N
Underlying Parameter			
• Tooth type:T10 • Surface: Black polyurethane • Tooth face: ESD Black cloth • Character:ESD	• Tooth type:T10 • Surface: Red polyurethane • Tooth face: Green nylon cloth • Character:Anti-slip	• Tooth type:T10 • Surface: Black polyurethane • Tooth face: Green nylon cloth • Character:Anti-slip	• Tooth type:T10 • Surface: Yellow polyurethane • Tooth face: Green nylon cloth • Character:Anti-slip
N1	K	K1	K2

Conveyor with lifter

Product Application Case

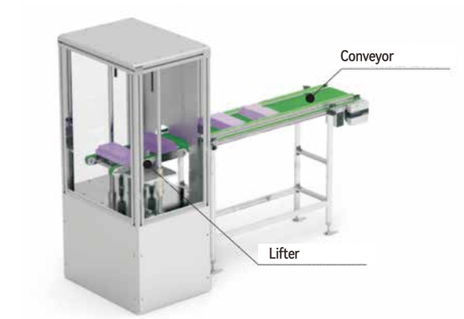

Dual Slots Aluminum Profilee

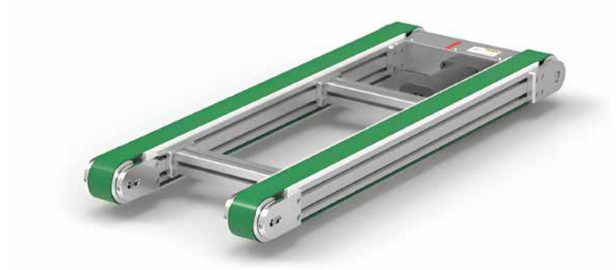

Conveyor Features

Dual lanes timing belt conveyor for pallet or fixture precision transferring, suitable for big load

※ Please do not exceed the allowed conveyor load and length.

Series Code	Type	※ Conveyor Features		Material			Surface Treatment		
		Application Features	Motion Features	Aluminum Profile	Motor Cover	Pulley Mounting Board	Aluminum Profile	Motor Cover	Pulley Mounting Board
BTR01	Baffle alignment type for small load	Cloth tooth surface to reduce noise support precision positioning and transferring	Forward/ Reverse transfer	Alloy			Surface electrophoresis	Painting	

Model		❸L-Conveyor Length 5mm	Motor Options						
❶ Series Code	❷B-Belt Width		❹ Output Power(W)	❺ Voltage(V)	❻ Motor Type	❼ Gear box ratio	❽ Belt Spec	❾ Motor Brand
BTR01	200~600 Min.Step (5:mm)	500~5000	60 90 120	TA220 Single phase	IM Fix-speed motor	5 7.5 10 12.5 15 18 25 30 36 50 60 75 90 100 120 150 180	C(General type- White polyurethane)	GPG JSCC No motor
				SA220 Three phase	SCM Speed adjustable motor		C1(General type-Cloth+ Green polyurethane)	
			60 90	DC24 DC TA220 Single phase	INV VFD type		C2(General type- White polyurethane)	ZD No motor
					KMC Speed adjustable motor SWS Motor with drive		N(ESD-Cloth+ Black polyurethane)	
			❹ Motor Series	❺ Control method	❻ Output torque	❼ Drive type	N1(ESD- Black polyurethane)	❾ Stepper motor brand
			57 series stepper motor	CM Open loop CME Closed loop	23 26 31	MC Pulse type IO IO type EC IO typeEtherCAT RS RS485	K(Anti-slip- Red polyurethane)	S(Leadshine) No motor
			❹ Inertia	❺ Voltage(V)	❻ Output power	⚠ Default type: pulse type	K1(Anti-slip- Black polyurethane)	❾ Servo motor brand
			MH Servo motor	TA220 Single phase	400W		K2(Anti-slip- Yellow polyurethane)	S(Leadshine) X(Panasonic) No motor

※ Recommend motor brand JSCC

Model code example									
"—" Model code example	Conveyor Model	Belt Width	Conveyor Length	Output Power	Voltage	Control Method	Ratio	Belt Type	Motor Brand
Speed adjustable motor	BTR01	B200	L1000	90	TA220	SCM	12.5	C	G
"—" Model code example	Conveyor Model	Belt Width	Conveyor Length	Motor series	Control Method	Output torque	Drive type	Belt Type	Motor Brand
Stepper motor	BTR01	B200	L1000	57	CM	23	MC	C	S
"—" Model code example	Conveyor Model	Belt Width	Conveyor Length	Inertia	Voltage	Output power	Drive type	Belt Type	Motor Brand
Servo motor	BTR01	B200	L1000	MH	TA220	400W	EC	C	X

Recommend belt width and conveyor length							
Model	B	L500 ≀ 1000	L1005 ≀ 2000	L2005 ≀ 3000	L3005 ≀ 4000	L4005 ≀ 5000	—
BTR01	200~300	●	●	●	●	●	—
	310~400	●	●	●	●	●	—
	410~500	●	●	●	●	●	—
	510~600	—	●	●	●	●	—
	—	—	—	—	—	—	—

Conveyor Dimensions

Motor Specification: 90W ⟵ Motion Direction

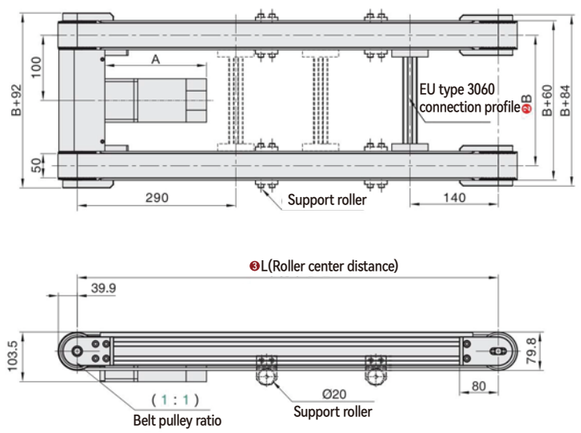

Conveyor Profile Section

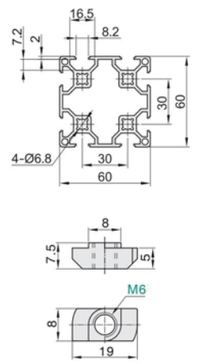

Nut is offered as accessory.

⚠ Nut specification inside aluminum profile slot: Basis on L (Roller center distance)

500~999	1000~1499	1500~	Position	Spec	Status
16PCS	24PCS	32PCS	—	M6(T type)	Accessory
—	—	—	—	—	—

Conveyor speed and load capability

Form 1: Gear box ratio and conveyor speed(m/min)

Gear box radio	Fix-speed motor Speed(m/min)	Speed adjustable motor Speed(m/min)	Frequency motor Speed(m/min)	Brushless motor Speed(m/min)
5	64.4	38.7~64.4	80.2	0~143.2
7.5	43.0	25.8~43.0	53.5	0~95.5
10	32.2	19.3~32.2	40.1	0~71.6
12.5	25.8	15.5~25.8	32.1	0~57.3
15	21.5	12.9~21.5	26.7	0~47.7
18	17.9	10.7~17.9	22.3	0~39.8
25	12.9	7.7~12.9	16.0	0~28.6
30	10.7	6.4~10.7	13.4	0~23.9
36	8.9	5.4~8.9	11.1	0~19.9
50	6.4	3.9~6.4	8.0	0~14.3
60	5.4	3.2~5.4	6.7	0~11.9

Form 2: Pulse quality and conveyor speed(m/min)

Pulse quantity	Conveyor speed(m/min)	57 series stepper motor torque 2.3N.m	2.6N.m	3.1N.m	—	—	—	—
400	28.6	0~6.6	0~7.5	0~9.0	—	—	—	—
800	57.3	0~3.3	0~3.8	0~4.5	—	—	—	—
1600	114.5	0~1.7	0~1.9	0~2.3	—	—	—	—
3200	229.1	0~0.8	0~0.9	0~1.1	—	—	—	—
6400	458.2	0~0.4	0~0.5	0~0.6	—	—	—	—
12800	916.4	—	—	—	—	—	—	—
25600	1832.8	—	—	—	—	—	—	—
51200	3665.5	—	—	—	—	—	—	—

Instrument 1.Set the current as default 2.Set the code on motor drive 3.Default torque can be modified by current setting.

⚠ Test Condition:B=80 L=1000

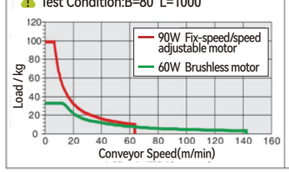

⚠ Speed calculation formula

1.Drive roller diameter D=76mm
2.Speed adjustable motor RPM=1350r/min
3.Frequency motor RPM=1680r/min
4.Brushless motor RPM=3000r/min
5.Belt pulley ratio i2=1:1

$$S=\frac{D\times\pi\times R\times i2}{i1\times1000}$$

$$S=\frac{76\times3.14\times1350\times1}{12.5\times1000}$$

S= 25.77312m/min

⚠ Test Condition:B=80 L=1000 Current:5A

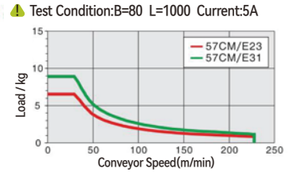

⚠ Speed calculation formula

1.Drive roller diameter D=76mm
2.Pulse quantity=400
3.Stepper motor angle J=1.8°
4.Belt pulley ratio i2=1:1

$$S=\frac{D\times\pi\times(M\times J/360\times60)\times i_2}{1000}$$

$$S=\frac{76\times3.14\times(400\times1.8/360\times60)\times1}{1000}$$

S= 28.6368m/min

⚠ Conveyor speed and load capability are for reference, the data is measured by testing under specific conditions.

Belt Specification

Underlying Parameter			
• Tooth type:T10 • Surface: White polyurethane • Tooth face: Green nylon cloth • Character:General	• Tooth type:T10 • Surface: Green nylon cloth • Tooth face: Green nylon cloth • Character:General	• Tooth type:T10 • Surface: White polyurethane • Tooth face: Black nylon cloth • Character:General	• Tooth type:T10 • Surface: Black polyurethane • Tooth face: ESD Black cloth • Character:ESD
C	C1	C2	N
Underlying Parameter			
• Tooth type:T10 • Surface: Black polyurethane • Tooth face: ESD Black cloth • Character:ESD	• Tooth type:T10 • Surface: Red polyurethane • Tooth face: Green nylon cloth • Character:Anti-slip	• Tooth type:T10 • Surface: Black polyurethane • Tooth face: Green nylon cloth • Character:Anti-slip	• Tooth type:T10 • Surface: Yellow polyurethane • Tooth face: Green nylon cloth • Character:Anti-slip
N1	K	K1	K2

Conveyor for pallet stacking

Product Application Case

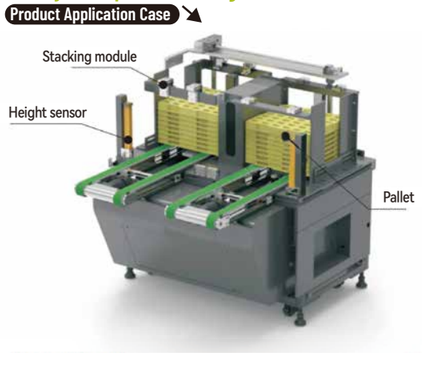

Dual Slots Aluminum Profilee



Conveyor Features

Dual lanes timing belt conveyor for pallet or fixture precision transferring, suitable for big load

※ Please do not exceed the allowed conveyor load and length.

Series Code	Type	※ Conveyor Features		Material			Surface Treatment		
		Application Features	Motion Features	Aluminum Profile	Motor Cover	Pulley Mounting Board	Aluminum Profile	Motor Cover	Pulley Mounting Board
BTP01	Baffle alignment type for small load	Cloth tooth surface to reduce noise support precision positioning and transferring	Forward/ Reverse transfer	Alloy			Surface electrophoresis	Painting	

Model		❸L-Conveyor Length 5mm	Motor Options						
❶ Series Code	❷B-Belt Width		❹ Output Power(W)	❺ Voltage(V)	❻ Motor Type	❼ Gear box ratio		❽ Belt Spec	❾ Motor Brand
BTP01	150~600 Min.Step (5:mm)	500~5000	60 90 120	TA220 Single phase SA220 Three phase	IM Fix-speed motor SCM Speed adjustable motor INV VFD type	5 7.5 10 12.5 15 18 25 30 36 50 60 75 90 100 120 150 180		C(General type- White polyurethane) C1(General type-Cloth+ Green polyurethane) C2(General type- White polyurethane) N(ESD-Cloth+ Black polyurethane) N1(ESD- Black polyurethane) K(Anti-slip- Red polyurethane) K1(Anti-slip- Black polyurethane) K2(Anti-slip- Yellow polyurethane)	GPG JSCC No motor
			60 90	DC24 DC TA220 Single phase	KMC Speed adjustable motor SWS Motor with drive				ZD No motor
			❹ Motor Series	❺ Control method	❻ Output torque	❼ Drive type			❾ Stepper motor brand
			86 series stepper motor	CM Open loop CME Closed loop	45 80 120	MC Pulse type IO IO type EC IO typeEtherCAT RS RS485 ⚠ Default type: pulse type			S(Leadshine) No motor
			❹ Inertia	❺ Voltage(V)	❻ Output power				❾ Servo motor brand
			MH Servo motor	TA220 Single phase	750W				S(Leadshine) X(Panasonic) No motor

※ Recommend motor brand JSCC

Model code example	Conveyor Model	Belt Width	Conveyor Length	Output Power	Voltage	Control Method	Ratio	Belt Type	Motor Brand
Speed adjustable motor	BTP01	B150	L1000	90	TA220	SCM	12.5	C	G
Model code example	Conveyor Model	Belt Width	Conveyor Length	Motor series	Control Method	Output torque	Drive type	Belt Type	Motor Brand
Stepper motor	BTP01	B150	L1000	86	CM	45	MC	C	S
Model code example	Conveyor Model	Belt Width	Conveyor Length	Inertia	Voltage	Output power	Drive type	Belt Type	Motor Brand
Servo motor	BTP01	B150	L1000	MH	TA220	750W	EC	C	X

Recommend belt width and conveyor length

Model	B	L500 ≀ 1000	L1005 ≀ 2000	L2005 ≀ 3000	L3005 ≀ 4000	L4005 ≀ 5000	–
BTP01	150~300	●	●	●	●	●	–
	310~400	●	●	●	●	●	–
	410~500	●	●	●	●	●	–
	510~600	–	●	●	●	●	–
	–	–	–	–	–	–	–

Conveyor Dimensions

Motor Specification: 90W ⟵ Motion Direction

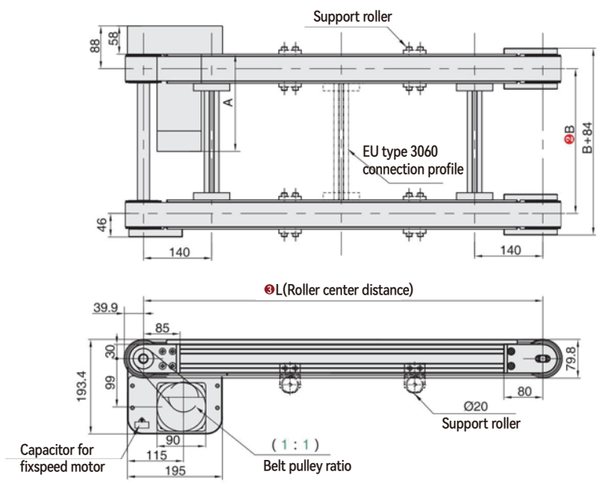

Conveyor Profile Section

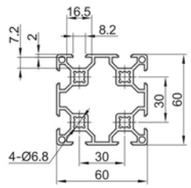

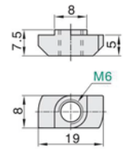

Nut is offered as accessory.

⚠ Nut specification inside aluminum profile slot: Basis on L (Roller center distance)

500~999	1000~1499	1500~	Position	Spec	Status
16PCS	24PCS	32PCS	–	M6(T type)	Accessory
–	–	–	–	–	–

Conveyor speed and load capability

Form 1: Gear box ratio and conveyor speed(m/min)

Gear box radio	Fix-speed motor Speed(m/min)	Speed adjustable motor Speed(m/min)	Frequency motor Speed(m/min)	Brushless motor Speed(m/min)
5	64.4	38.7~64.4	80.2	0~143.2
7.5	43.0	25.8~43.0	53.5	0~95.5
10	32.2	19.3~32.2	40.1	0~71.6
12.5	25.8	15.5~25.8	32.1	0~57.3
15	21.5	12.9~21.5	26.7	0~47.7
18	17.9	10.7~17.9	22.3	0~39.8
25	12.9	7.7~12.9	16.0	0~28.6
30	10.7	6.4~10.7	13.4	0~23.9
36	8.9	5.4~8.9	11.1	0~19.9
50	6.4	3.9~6.4	8.0	0~14.3
60	5.4	3.2~5.4	6.7	0~11.9

⚠ Test Condition:B=150 L=1000

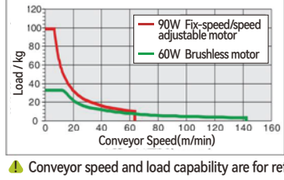

⚠ Speed calculation formula

1.Drive roller diameter D=76mm
2.Speed adjustable motor RPM=1350r/min
3.Frequency motor RPM=1680r/min
4.Brushless motor RPM=3000r/min
5.Belt pulley ratio i2=1:1

$$S=\frac{D\times\pi\times R\times i2}{i1\times1000}$$

$$S=\frac{76\times3.14\times1350\times1}{12.5\times1000}$$

S= 25.77312m/min

Form 2: Pulse quality and conveyor speed(m/min)

Pulse quantity	Conveyor speed(m/min)	–	–	–	86 series stepper motor torque			
		–	–	–	4.5N.m	8.0N.m	12.0N.m	–
400	28.6	–	–	–	0~13.2	0~23.6	0~35.6	–
800	57.3	–	–	–	0~6.6	0~11.8	0~17.8	–
1600	114.5	–	–	–	0~3.3	0~5.9	0~8.9	–
3200	229.1	–	–	–	0~1.7	0~3.0	0~4.4	–
6400	458.2	–	–	–	0~0.8	0~1.5	0~2.2	–
12800	916.4	–	–	–	–	–	–	–
25600	1832.8	–	–	–	–	–	–	–
51200	3665.5	–	–	–	–	–	–	–

Instrument 1.Set the current as default 2.Set the code on motor drive
3.Default torque can be modified by current setting.

⚠ Test Condition:B=150 L=1000 Current:5A

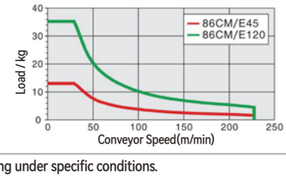

⚠ Speed calculation formula

1.Drive roller diameter D=76mm
2.Pulse quantity=400
3.Stepper motor angle J=1.8°
4.Belt pulley ratio i2=1:1

$$S=\frac{D\times\pi\times(M\times J/360\times60)\times i_2}{1000}$$

$$S=\frac{76\times3.14\times(400\times1.8/360\times60)\times1}{1000}$$

S= 28.6368m/min

⚠ Conveyor speed and load capability are for reference, the data is measured by testing under specific conditions.

Belt Specification

Underlying Parameter			
• Tooth type:T10 • Surface: White polyurethane • Tooth face: Green nylon cloth • Character:General	• Tooth type:T10 • Surface: Green polyurethane • Tooth face: Green nylon cloth • Character:General	• Tooth type:T10 • Surface: White polyurethane • Tooth face: Black nylon cloth • Character:General	• Tooth type:T10 • Surface: Black polyurethane • Tooth face: ESD Black cloth • Character:ESD
C	C1	C2	N
			
Underlying Parameter			
• Tooth type:T10 • Surface: Black polyurethane • Tooth face: ESD Black cloth • Character:ESD	• Tooth type:T10 • Surface: Red polyurethane • Tooth face: Green nylon cloth • Character:Anti-slip	• Tooth type:T10 • Surface: Black polyurethane • Tooth face: Green nylon cloth • Character:Anti-slip	• Tooth type:T10 • Surface: Yellow polyurethane • Tooth face: Green nylon cloth • Character:Anti-slip
N1	K	K1	K2
			

Conveyor for pallet feeding and out feeding

Product Application Case

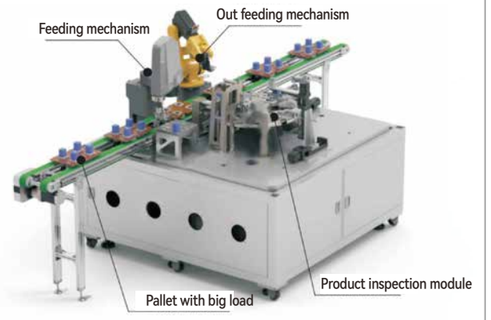

Single Slot Aluminum Profilee

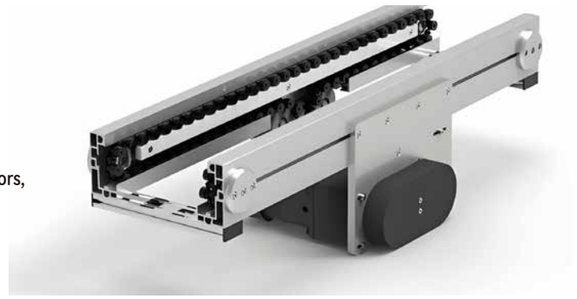

Conveyor Features

Free flow chain for accumulated pallet transferring,
wear-resistant guide profile, easy connection between conveyors,
suitable for big load.

Conveyor Dimensions

Motor Specification : 60W ← Motion Direction

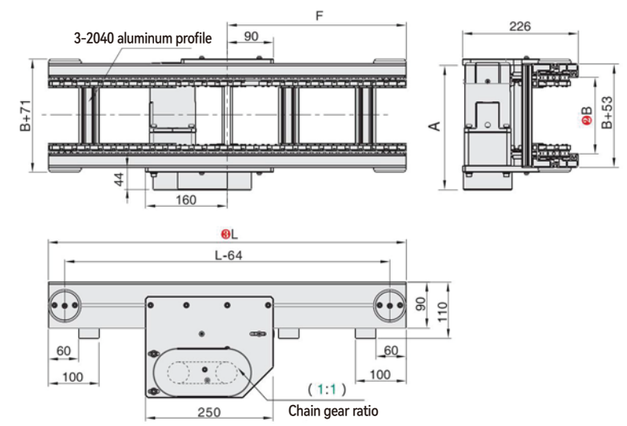

Conveyor Profile Section

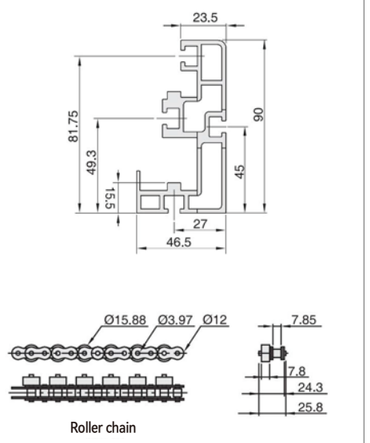

⚠ Nut specification inside aluminum profile slot:
Basis on L (Roller center distance)

550~999	1000~1499	1500~	Position	Spec	Status
8PCS	12PCS	16PCS	—	M6(square)	Accessory
—	—	—	—	—	—

Conveyor speed and load capability

Form 1: Gear box ratio and conveyor speed(m/min)

Gear box radio	Fix-speed motor Speed(m/min)	Speed adjustable motor Speed(m/min)	Frequency motor Speed(m/min)	—
5	—	—	—	—
7.5	—	—	—	—
10	—	—	—	—
12.5	19.3	11.6~19.3	24.1	—
15	16.1	9.7~16.1	20.0	—
18	13.4	8.1~13.4	16.7	—
25	9.7	5.8~9.7	12.0	—
30	8.1	4.8~8.1	10.0	—
36	6.7	4.0~6.7	8.4	—
50	4.8	2.9~4.8	6.0	—
60	4.0	2.4~4.0	5.0	—

⚠ Test Condition:B=100 L=1000

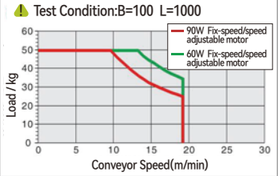

⚠ Speed calculation formula

1.Drive roller diameter D=57mm
2.Speed adjustable motor RPM=1350r/min
3.Frequency motor RPM=1680r/min
4.Belt pulley ratio i2=1:1

$$S=\frac{D\times\pi\times R\times i2}{i1\times1000}$$

$$S=\frac{57\times3.14\times1350\times1}{12.5\times1000}$$

S= 19.32984m/min

Form 2: Pulse quality and conveyor speed(m/min)

Gear box radio	Brushless motor (m/min)	—	—	—
5	—	—	—	—
7.5	—	—	—	—
10	—	—	—	—
12.5	0~43.0	—	—	—
15	0~35.8	—	—	—
18	0~29.8	—	—	—
25	0~21.5	—	—	—
30	0~17.9	—	—	—
36	0~14.9	—	—	—
50	0~10.7	—	—	—
60	0~8.9	—	—	—

⚠ Test Condition:B=100 L=1000 Current:5A

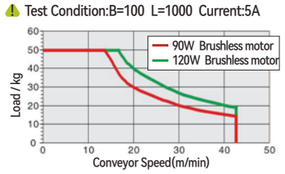

⚠ Speed calculation formula

1.Drive roller diameter D=57mm
2.Brushless motor RPM=3000
3.Belt pulley ratio i2=1:1

$$S=\frac{D\times\pi\times R\times i2}{i1\times1000}$$

$$S=\frac{57\times3.14\times3000\times1}{12.5\times1000}$$

S= 42.9552m/min

⚠ Conveyor speed and load capability are for reference, the data is measured by testing under specific conditions.

※ Please do not exceed the allowed conveyor load and length.

Series Code	Type	※ Conveyor Features		Material			Surface Treatment		
		Application Features	Motion Features	Aluminum Profile	Motor Cover	Pulley Mounting Board	Aluminum Profile	Motor Cover	Pulley Mounting Board
BRZ01	Accumulation	Free flow chain allows pallet accumulation	Forward/ Reverse transfer	S45C+Nylon	S45C	Alloy	Electrophoresis	Painting	

Model		❸L-Conveyor Length 5mm	Motor Options				❽ Belt Spec	❾ Motor Brand
❶ Series Code	❷B-Belt Width		❹ Output Power(W)	❺ Voltage(V)	❻ Motor Type	❼ Gear box ratio		
BRZ01	80~500 Min.Step (5:mm)	550~4000	60 90 120	TA220 Single phase	IM Fix-speed motor SCM Speed adjustable motor	12.5 15 18 25 30 36 50 60 75 90 100 120 150 180	NL(Black-Nylon) SC(Origin-Carbon Steel) SU(Origin-Stainless Steel)	GPG JSCC No motor
				SA220 Three phase	INV VFD type			
			60 90 120	DC24 DC TA220 Single phase	KMC Speed adjustable motor SWS Motor with drive			ZD No motor

※ Recommend motor brand JSCC

Model code example										
"—" Model code example	Conveyor Model		Belt Width		Conveyor Length		Motor Power	Voltage	Control Method	Ratio	Chain Material	Motor Brand
Speed adjustable motor	BRZ01	–	B200	–	L1000	–	60 –	TA220	– SCM	– 12.5	– NL	– G
"—" Model code example	Conveyor Model		Belt Width		Conveyor Length		Motor Power	Voltage	Control Method	Ratio	Chain Material	
Stepper motor	BRZ01	–	B200	–	L1000	–	60 –	TA220	– IM	– 12.5	– SC	– G
"—" Model code example	Conveyor Model		Belt Width		Conveyor Length		Motor Power	Voltage	Control Method	Ratio	Chain Material	
Servo motor	BRZ01	–	B200	–	L1000	–	60 –	SA220	– INV	– 12.5	– SU	– G

Belt Specification

Belt conveyor automated production.
Product Application Case

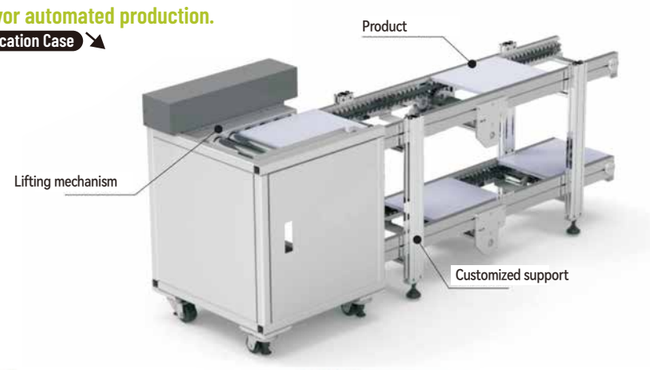

Three Slots Aluminum Profilee



Conveyor Features

Plastic chain adapt to anti-static, corrosion resistance, and non-magnetic properties working environment for medium load part transferring.

Conveyor Dimensions

Motor Specification : 40W ⟵ Motion Direction

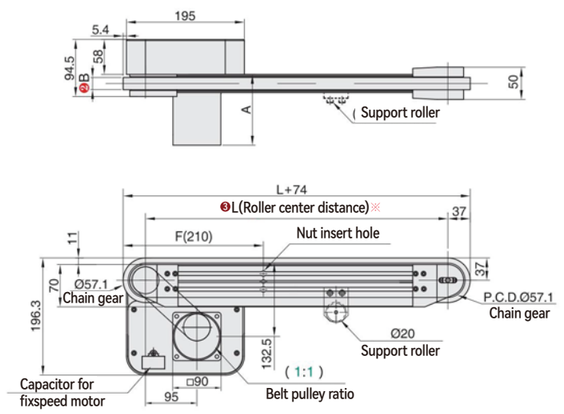

Conveyor Profile Section

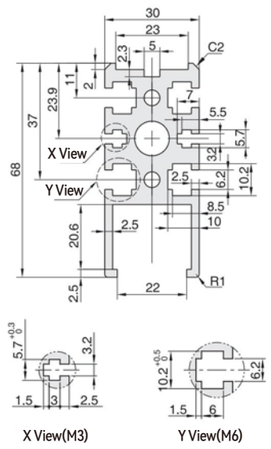

⚠ Nut specification inside aluminum profile slot: Basis on L (Roller center distance)

300~999	1000~1499	1500~	Position	Spec	Status
4PCS	6PCS	8PCS	X View	M3 (hexagonal)	Accessory
4PCS	6PCS	8PCS	Y View	M6(square)	Accessory

Conveyor speed and load capability

Form 1: Gear box ratio and conveyor speed(m/min)

Gear box radio	Fix-speed motor Speed(m/min)	Speed adjustable motor Speed(m/min)	Frequency motor Speed(m/min)	—
5	48.3	29.0~48.3	60.1	—
7.5	32.2	19.3~32.2	40.1	—
10	24.2	14.5~24.2	30.1	—
12.5	19.3	11.6~19.3	24.1	—
15	16.1	9.7~16.1	20.0	—
18	13.4	8.1~13.4	16.7	—
25	9.7	5.8~9.7	12.0	—
30	8.1	4.8~8.1	10.0	—
36	6.7	4.0~6.7	8.4	—
50	4.8	2.9~4.8	6.0	—
60	4.0	2.4~4.0	5.0	—

⚠ Test Condition:B=100 L=1000

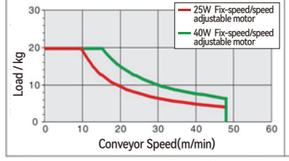

⚠ Speed calculation formula

1.Drive roller diameter D=57mm
2.Speed adjustable motor RPM=1350r/min
3.Frequency motor RPM=1680r/min
4.Belt pulley ratio i2=1:1

$S=\frac{D\times\pi\times R\times i2}{i1\times1000}$

$S=\frac{57\times3.14\times1350\times1}{12.5\times1000}$

S= 19.32984m/min

Form 2: Pulse quality and conveyor speed(m/min)

Gear box radio	Brushless motor (m/min)	—	—	—
5	0~107.4	—	—	—
7.5	0~71.6	—	—	—
10	0~53.7	—	—	—
12.5	0~43.0	—	—	—
15	0~35.8	—	—	—
18	0~29.8	—	—	—
25	0~21.5	—	—	—
30	0~17.9	—	—	—
36	0~14.9	—	—	—
50	0~10.7	—	—	—
60	0~8.9	—	—	—

⚠ Test Condition:B=100 L=1000 Current:5A

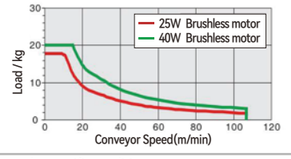

⚠ Speed calculation formula

1.Drive roller diameter D=57mm
2.Brushless motor RPM=3000
3.Belt pulley ratio i2=1:1

$S=\frac{D\times\pi\times R\times i2}{i1\times1000}$

$S=\frac{57\times3.14\times3000\times1}{12.5\times1000}$

S= 42.9552m/min

⚠ Conveyor speed and load capability are for reference, the data is measured by testing under specific conditions.

※ Please do not exceed the allowed conveyor load and length.

Series Code	Type	※ Conveyor Features		Material			Surface Treatment		
		Application Features	Motion Features	Aluminum Profile	Motor Cover	Pulley Mounting Board	Aluminum Profile	Motor Cover	Pulley Mounting Board
BRT01	With chain guide profile	Adapt to continue transferring	Forward/ Reverse transfer	Polyacetal	Nylon	Alloy	Electrophoresis	Painting	

Model		❸L-Conveyor Length 5mm	Motor Options				❽ Belt Spec	❾ Motor Brand
❶ Series Code	❷B-Belt Width		❹ Output Power(W)	❺ Voltage(V)	❻ Motor Type	❼ Gear box ratio		
BRT01	20 Min.Step (5:mm)	300~3000	25 40	TA220 Single phase	IM Fix-speed motor SCM Speed adjustable motor	5 7.5 9 12.5 15 18 25 30 36 50 60 75 90 100 120 150 180	NL(Black-Nylon) SC(Origin-Carbon Steel) SU(Origin-Stainless Steel)	GPG JSCC No motor
				SA220 Three phase	INV VFD type			
			25 40	DC24 DC TA220 Single phase	KMC Speed adjustable motor SWS Motor with drive			ZD No motor

※ Recommend motor brand JSCC

Model code example

"—" Model code example	Conveyor Model		Belt Width		Conveyor Length		Motor Power		Voltage		Control Method		Ratio		Chain Material		Motor Brand
Speed adjustable motor	BRT01	–	B20	–	L1000	–	25	–	TA220	–	SCM	–	12.5	–	H	–	G
"—" Model code example	Conveyor Model		Belt Width		Conveyor Length		Motor Power		Voltage		Control Method		Ratio		Chain Material		Motor Brand
Stepper motor	BRT01	–	B20	–	L1000	–	25	–	TA220	–	IM	–	12.5	–	H	–	G
"—" Model code example	Conveyor Model		Belt Width		Conveyor Length		Motor Power		Voltage		Control Method		Ratio		Chain Material		Motor Brand
Servo motor	BRT01	–	B20	–	L1000	–	25	–	SA220	–	INV	–	12.5	–	H	–	G

Belt Specification

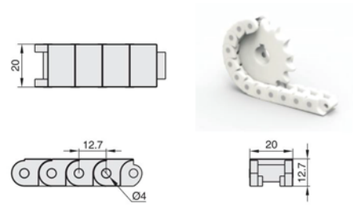

Chain Type	Chain Width W (mm)	Chain Weight (KG/M)	Chain Material	Chain Width W (mm)	Working Load N	Link Pin Material
40P Chain	20	0.4	POM	POM	490	SUS
Pitch(mm)	Link Pin Diameter(mm)	Minimum Curve Radius				
12.7	4	RD125				

Conveyor for product out feeding

Product Application Case

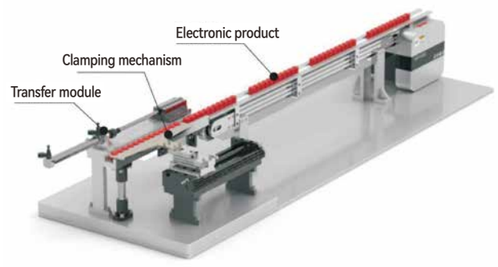

Three Slots Aluminum Profilee

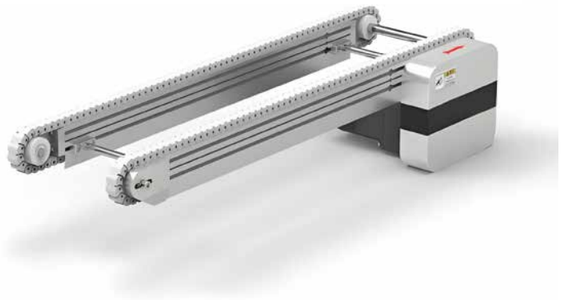

Conveyor Features

Plastic chain adapt to anti-static, corrosion resistance, and non-magnetic properties working environment for medium load part transferring.

※ Please do not exceed the allowed conveyor load and length.

Series Code	Type	※ Conveyor Features		Material			Surface Treatment		
		Application Features	Motion Features	Aluminum Profile	Motor Cover	Pulley Mounting Board	Aluminum Profile	Motor Cover	Pulley Mounting Board
BRT21	With chain guide profile	Adapt to continue transferring	Forward/ Reverse transfer	Polyacetal	Nylon	Alloy	Electrophoresis	Painting	

Model		❸L-Conveyor Length 5mm	Motor Options				❽ Belt Spec	❾ Motor Brand
❶ Series Code	❷B-Belt Width		❹ Output Power(W)	❺ Voltage(V)	❻ Motor Type	❼ Gear box ratio		
BRT21	80~500 Min.Step (5:mm)	300~3000	25 40	TA220 Single phase	IM Fix-speed motor SCM Speed adjustable motor	5 7.5 9 12.5 15 18 25 30 36 50 60 75 90 100 120 150 180	NL(Black-Nylon) SC(Origin-Carbon Steel) SU(Origin-Stainless Steel)	GPG JSCC No motor
				SA220 Three phase	INV VFD type			
			25 40	DC24 DC TA220 Single phase	KMC Speed adjustable motor SWS Motor with drive			ZD No motor

※ Recommend motor brand JSCC

Model code example									
"—" Model code example	Conveyor Model	Belt Width	Conveyor Length	Motor Power	Voltage	Control Method	Ratio	Chain Material	Motor Brand
Speed adjustable motor	BRT21 –	B80 –	L1000 –	25 –	TA220 –	SCM –	12.5 –	H –	G
"—" Model code example	Conveyor Model	Belt Width	Conveyor Length	Motor Power	Voltage	Control Method	Ratio	Chain Material	Motor Brand
Stepper motor	BRT21 –	B80 –	L1000 –	25 –	TA220 –	IM –	12.5 –	H –	G
"—" Model code example	Conveyor Model	Belt Width	Conveyor Length	Motor Power	Voltage	Control Method	Ratio	Chain Material	Motor Brand
Servo motor	BRT21 –	B80 –	L1000 –	25 –	SA220 –	INV –	12.5 –	H –	G

Conveyor Dimensions

Motor Specification : 40W ⟵ Motion Direction

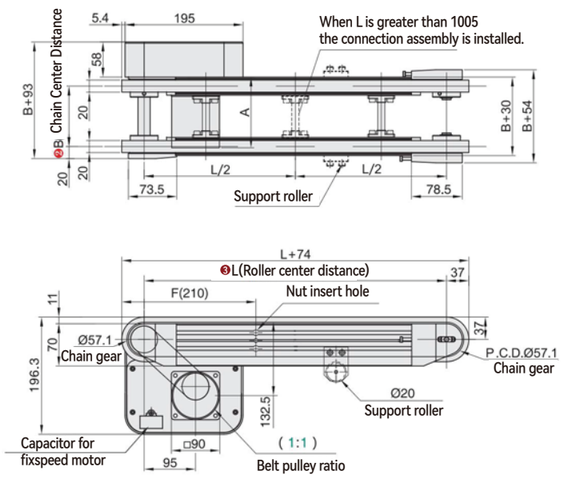

Conveyor Profile Section

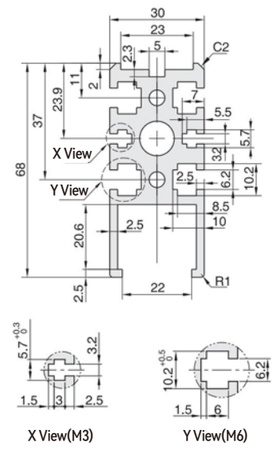

⚠ Nut specification inside aluminum profile slot:
Basis on L (Roller center distance)

300~999	1000~1499	1500~	Position	Spec	Status
4PCS	6PCS	8PCS	X View	M3 (hexagonal)	Accessory
4PCS	6PCS	8PCS	Y View	M6(square)	Accessory

Conveyor speed and load capability

Form 1: Gear box ratio and conveyor speed(m/min)

Gear box radio	Fix-speed motor Speed(m/min)	Speed adjustable motor Speed(m/min)	Frequency motor Speed(m/min)	—
5	48.3	29.0~48.3	60.1	—
7.5	32.2	19.3~32.2	40.1	—
10	24.2	14.5~24.2	30.1	—
12.5	19.3	11.6~19.3	24.1	—
15	16.1	9.7~16.1	20.0	—
18	13.4	8.1~13.4	16.7	—
25	9.7	5.8~9.7	12.0	—
30	8.1	4.8~8.1	10.0	—
36	6.7	4.0~6.7	8.4	—
50	4.8	2.9~4.8	6.0	—
60	4.0	2.4~4.0	5.0	—

⚠ Test Condition:B=100 L=1000

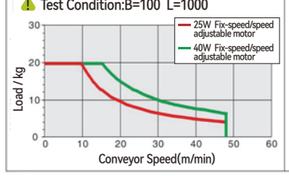

⚠ Speed calculation formula

1.Drive roller diameter D=57mm
2.Speed adjustable motor RPM=1350r/min
3.Frequency motor RPM=1680r/min
4.Belt pulley ratio i2=1:1

$$S=\frac{D\times\pi\times R\times i2}{i1\times1000}$$

$$S=\frac{57\times3.14\times1350\times1}{12.5\times1000}$$

S= 19.32984m/min

Form 2: Pulse quality and conveyor speed(m/min)

Gear box radio	Brushless motor (m/min)	—	—	—
5	0~107.4	—	—	—
7.5	0~71.6	—	—	—
10	0~53.7	—	—	—
12.5	0~43.0	—	—	—
15	0~35.8	—	—	—
18	0~29.8	—	—	—
25	0~21.5	—	—	—
30	0~17.9	—	—	—
36	0~14.9	—	—	—
50	0~10.7	—	—	—
60	0~8.9	—	—	—

⚠ Test Condition:B=100 L=1000 Current:5A

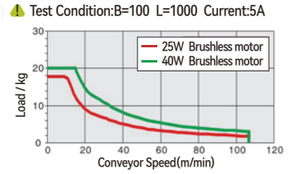

⚠ Speed calculation formula

1.Drive roller diameter D=57mm
2.Brushless motor RPM=3000
3.Belt pulley ratio i2=1:1

$$S=\frac{D\times\pi\times R\times i2}{i1\times1000}$$

$$S=\frac{57\times3.14\times3000\times1}{12.5\times1000}$$

S= 42.9552m/min

⚠ Conveyor speed and load capability are for reference, the data is measured by testing under specific conditions.

Belt Specification

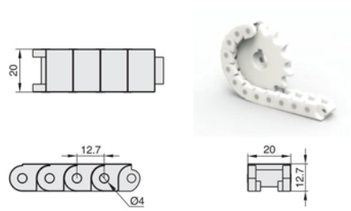

Chain Type	Chain Width W (mm)	Chain Weight (KG/M)	Chain Material	Chain Width W (mm)	Working Load N	Link Pin Material
40P Chain	20	0.4	POM	POM	490	SUS
Pitch(mm)	Link Pin Diameter(mm)	Minimum Curve Radius				
12.7	4	RD125				

Conveyor for product accumulated transferring

Product Application Case

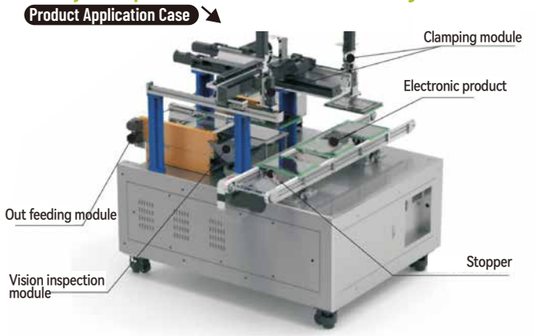

Aluminum Profile Support

Adapt conveyor type: BQ/BE series

Series Code	Type	Material				Surface Treatment			
		A:Connection board	B:Support profile	C:Connection board	D:Cup Base	A:Connection board	B:Support profile	C:Connection board	D:Cup Base
BSV01	I Type	SUS201	Aluminum profile	45#	Iron	Origin color	Sandblasting oxidation	Ni plating	Zn plating

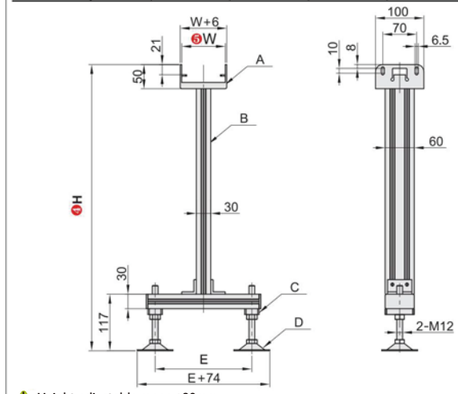

Application Instrument





⚠ Height adjustable range ±30mm

Type		①L(Minimum step 5mm)	②H(Minimum step 5mm)	③W(Minimum step 5mm)	E(Minimum step 5mm)
④Series Code	⑤Leg Quantity				
BSV01	1 2	0~1200 When leg quantity is 1 then L=0	200~1200	50~200	When W=50~100.then E=200 When W=101~200.then E=280

Order Example

④Series Code	-	⑤Leg Quantity	-	①L	-	②H	-	③W	-	Addition requirements	-JL : When changing cup base to roller base;
BSV01	-	2	-	L800	-	H800	-	W200	-	JL	

Adapt conveyor type: conveyor for small load.

Series Code	Type	Material				Surface Treatment			
		A:Connection board	B:Support profile	C:Connection board	D:Cup Base	A:Connection board	B:Support profile	C:Connection board	D:Cup Base
BSV04	I Type	Casting	Aluminum profile	45#	Iron	Origin color	Sandblasting oxidation	Ni plating	Zn plating

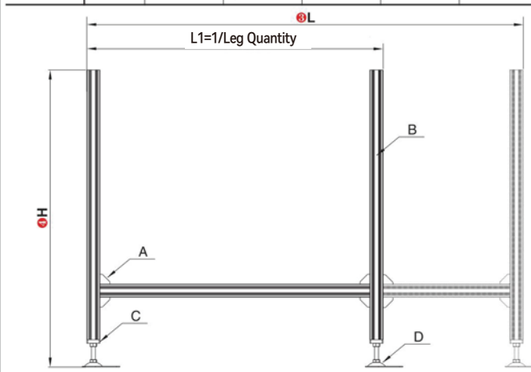



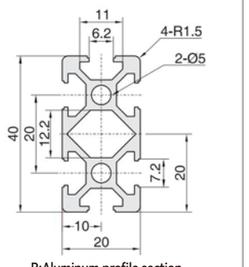

B:Aluminum profile section

⚠ Height adjustable range ±50mm

Type		①L(Minimum step 5mm)	②H(Minimum step 5mm)	③W(Minimum step 5mm)
④Series Code	⑤Leg Quantity			
BSV04	2 3 4	500~4000	300~1200	80~340

Order Example

④Series Code	-	⑤Leg Quantity	-	①L	-	②H	-	③W	-	Addition requirements	-JL : When changing cup base to roller base;
BSV04	-	2	-	L1000	-	H800	-	W200	-	JL	

Adapt conveyor type: Conveyor for medium load

Series Code	Type	Material				Surface Treatment			
		A:Connection board	B:Support profile	C:Connection board	D:Cup Base	A:Connection board	B:Support profile	C:Connection board	D:Cup Base
BSV02	I Type	SUS201	Aluminum profile	45#	Iron	Origin color	Sandblasting oxidation	Ni plating	Zn plating

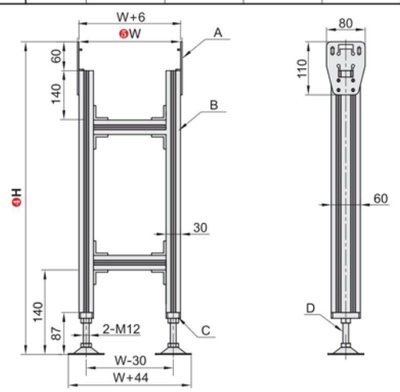

Application Instrument





⚠ Height adjustable range ±30mm

Type		①L(Minimum step 5mm)	②H(Minimum step 5mm)	③W(Minimum step 5mm)
④Series Code	⑤Leg Quantity			
BSV02	1 2	0~1200 When leg quantity is 1 then L=0	300~1300	150~500

Connection board:

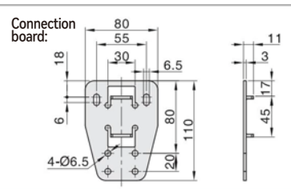

Order Example

④Series Code	-	⑤Leg Quantity	-	①L	-	②H	-	③W	-	Addition requirements	-JL : When changing cup base to roller base;
BSV02	-	2	-	L800	-	H800	-	W200	-	JL	

Adapt conveyor type: Conveyor for medium load

Series Code	Type	Material				Surface Treatment			
		A:Connection board	B:Support profile	C:Connection board	D:Cup Base	A:Connection board	B:Support profile	C:Connection board	D:Cup Base
BSV06	I Type	Casting	Aluminum profile	45#	Iron	Origin color	Sandblasting oxidation	Ni plating	Zn plating

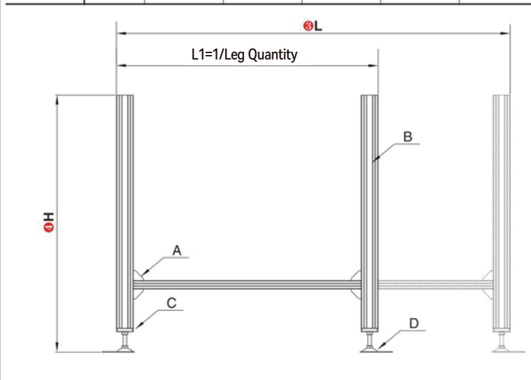



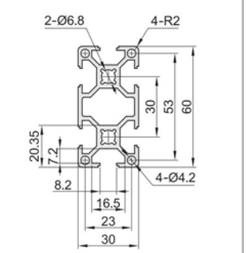

B:Aluminum profile section

⚠ Height adjustable range ±60mm

Type		①L(Minimum step 5mm)	②H(Minimum step 5mm)	③W(Minimum step 5mm)
④Series Code	⑤Leg Quantity			
BSV06	2 3 4 5	600~5000	300~1200	100~560

Order Example

④Series Code	-	⑤Leg Quantity	-	①L	-	②H	-	③W	-	Addition requirements	-JL : When changing cup base to roller base;
BSV06	-	2	-	L1000	-	H800	-	W200	-	JL	

Aluminum Profile Support

Adapt conveyor type: Conveyor for big load

Series Code	Type	Material				Surface Treatment			
		A:Connection board	B:Support profile	C:Connection board	D:Cup Base	A:Connection board	B:Support profile	C:Connection board	D:Cup Base
BSV08	I Type	Casting	Aluminum profile	45#	Iron	Origin color	Sandblasting oxidation	Ni plating	Zn plating

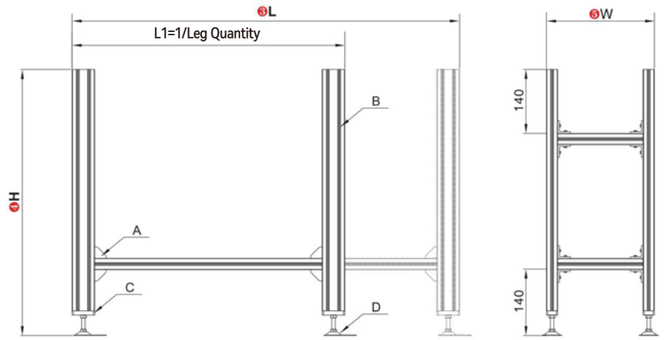



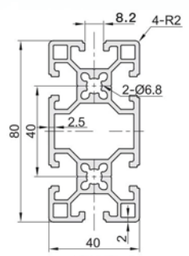

B:Aluminum profile section

Type		❸L(Minimum step 5mm)	❹H(Minimum step 5mm)	❺W(Minimum step 5mm)
❶Series Code	❷Leg Quantity			
BSV08	2 3 4 5 6	600~6000	400~1500	150~1000

Order Example

❶Series Code	-	❷Leg Quantity	-	❸L	-	❹H	-	❺W	-	Addition requirements	-JL : When changing cup base to roller base;
BSV08	-	2	-	L1000	-	H800	-	W200	-	JL	

Adapt conveyor type: Lifting conveyor

Series Code	Type	Material							
		A:Connection board	B:Support profile	C:Connection board	D:Cup Base	E:Lifting support	F: Stiffener	G: Threaded rod	H: Handwheel
BSV10	Lifting Type	Casting	Aluminum profile	45#	Iron	Aluminum profile	SUS201	Iron(M12)	Casting

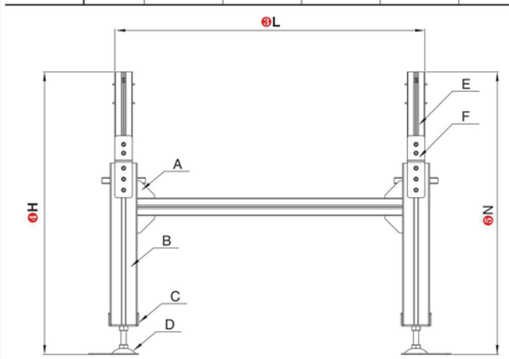



E:Aluminum profile section

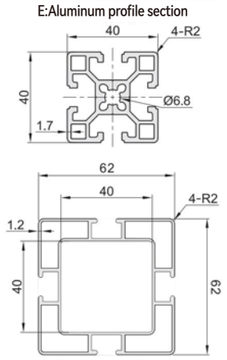

B:Aluminum profile section

Type		❸L (Minimum step 5mm)	❹H (Minimum step 5mm)	❺N (Minimum step 5mm)	❻W (Minimum step 5mm)
❶Series Code	❷Leg Quantity				
BSV10	2	400~1500	600~1400	300~1400	100~400

Order Example

❶Series Code	-	❷Leg Quantity	-	❸L	-	❹H	-	❺N	-	❻W	-	Addition requirements	-JL : When changing cup base to roller base;
BSV10	-	2	-	L1000	-	H800	-	N800	-	W200	-	JL	

Product Guide Accessory

Guide Profile Accessory: General

Series Code	Type	Material				Surface Treatment			
		A:Dish Shape	B:Support Pin	C:Clamping part	D:Connection Pin	A:Dish Shape	B:Support Pin	C:Clamping part	D:Connection Pin
BDS01	T Type	Plastic	#45	Plastic	#45	Black	Ni plating	Black	Ni plating
BDS02	T Type	Metal	Stainless steel	Metal	Stainless steel	--	--	--	--



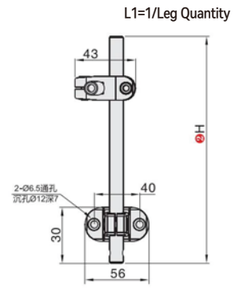

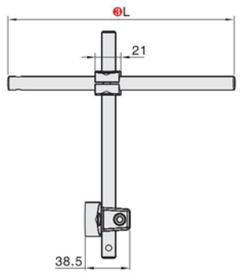

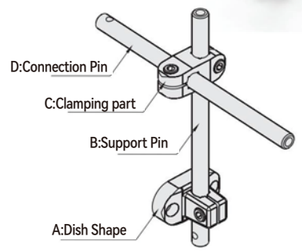

Type	❷H	❸L
❶Series Code	Diameter Ø12mm	Diameter Ø12mm
BDS01	80 100 120 150	80 100 120 150

Order Example

❶Series Code	-	❷H	-	❸L
BDS01	-	H100	-	L80

C shape guide profile: General

Series Code	Type	Material	
		A:Guide profile	B:Support profile
BDS05	General	PE	Aluminum profile

Series Code	Type	Material
		A:Guide part
BDS06	General	Nylon+201

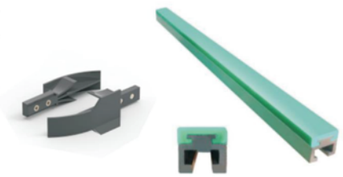

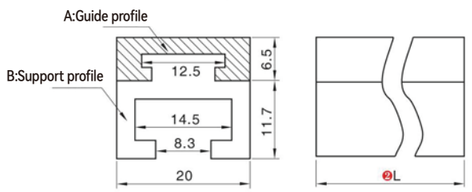

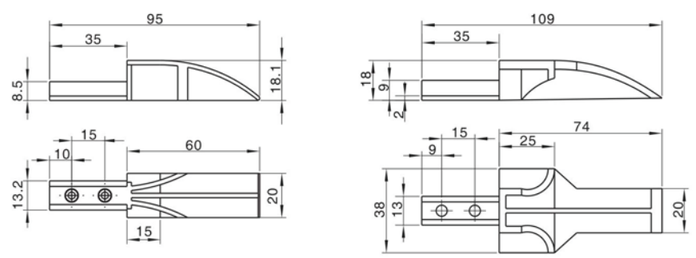

Type	❷L
❶Series Code	Diameter Ø12mm
BDS05	100~3000

Order Example

❶Series Code	-	❷L
BDS05	-	L1200

Type	❷Adapt Type C shape guide profile
❶Series Code	
BDS06	C20 C38

Order Example

❶Series Code	-	❷Type
BDS06	-	C20

Speed Controller Mounting Board/Box

Adapt Conveyor Type: General

Series Code	Type	Material
		Mounting board
BDS11	General	SUS201

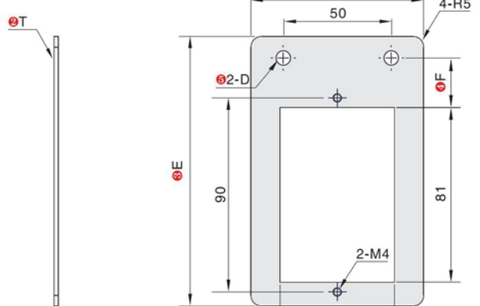



Type		❸E(Minimum step 1mm)	❹F(Minimum step 1mm)	❺D(Through hoe diameter)
Series Code	❷T(Thickness)			
BSD11	2 3	120~150	20~40	5.5 6.5 8.5

Order Example

❶Series code	❷T	❸E	❹F	❺D
BSD11	2	E125	F25	D6.5

Speed controller mounting box: Sheet metal welding type

Series Code	Type	Material	
		Sheet metal	Surface treatment
BDS12	Welding type	Iron	White painting

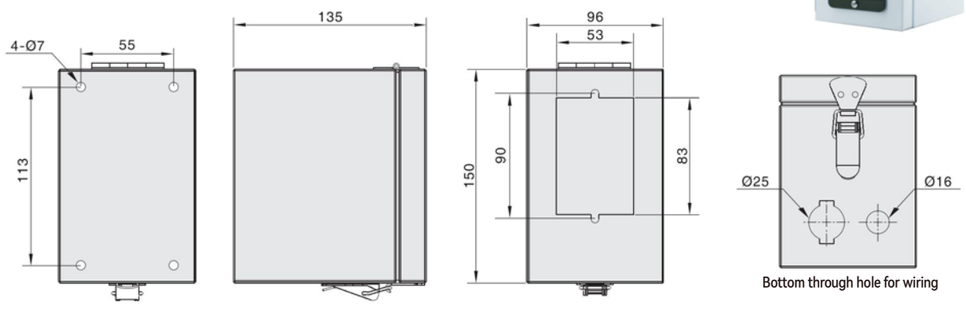



Type	❷Type
❶Series Code	Sheet metal welding
BDS12	H

Order Example

❶Series Code	❷Type
BDS12	H